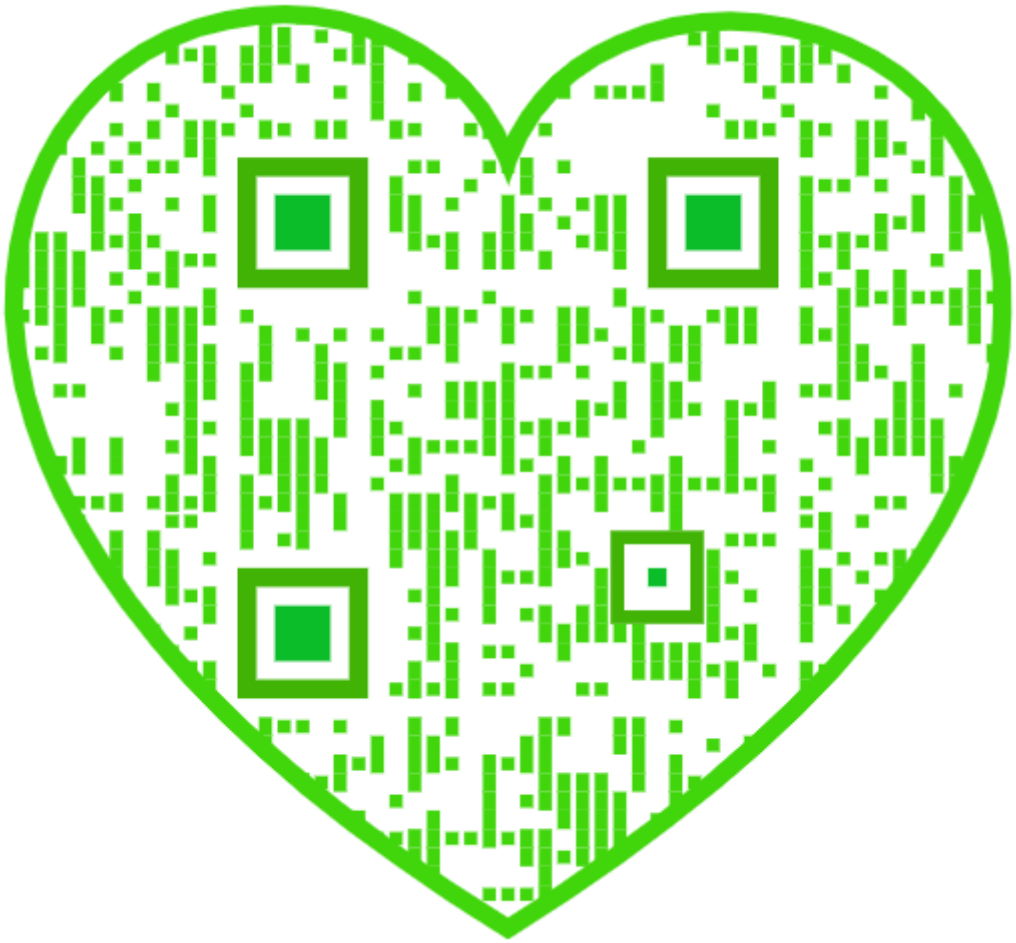

LIBRARY
OF THE
UNIVERSITY OF CALIFORNIA.

Class

THE STEAM-ENGINE

AND

OTHER HEAT-MOTORS

BY

W. H. P. CREIGHTON, U. S. N. (RETIRED)

Professor of Mechanical Engineering, Tulane University of Louisiana

SECOND EDITION, REVISED AND ENLARGED.

FIRST THOUSAND

NEW YORK

JOHN WILEY & SONS

LONDON: CHAPMAN & HALL, LIMITED

1909

TJ255
C8

GENEVA

Copyright 1907, 1909,
BY
W. H. P. CREIGHTON

The Scientific Press
Robert Drummond and Company
New York

LIBRARY
OF THE
UNIVERSITY
OF
CALIFORNIA

PREFACE TO THE SECOND EDITION.

In the second edition I have endeavored to utilize such constructive criticisms of the first edition as came to my attention. Five plates are used to illustrate engine details and each part is named on the plate itself. The first chapter now includes a number of calculations of a general character which were introduced to give the student a better view of the entire subject. The boiler, the engine, and the condenser are brought together so that the functions of each form parts of one picture in the student's mind. The inertia of the indicator piston and two of the difficult cases in the Zeuner valve diagram construction are discussed. The addition of tables and diagrams facilitates finding loss of head in steam or air pipes. As the use of logarithmic cross-section paper has not yet become common, a description of its use in connection with PV^n curves is given. The discussion on Hirn's analysis is now followed by very complete tables giving the mean effective pressure and the steam per horse-power-hour for condensing and for non-condensing engines of the four-valve type. Tables of corrections for initial condensation under various pressures are also given. A comparison of the ideal and practical consumption of steam under a variety of circumstances may thus be made quite easily.

The engineer has to deal with the transfer of heat through metal surfaces. Prof. Perry's theory of heat transfer and formulas for finding the mean temperature of the heating and cooling fluids, as well as for finding the rate of heat transfer per square foot per minute per degree difference in temperature, as given by Hausbrand, have been added. A much more complete discussion of the design of feed-water heaters and air-pumps both wet and dry for surface, jet or barometric condensers is presented. The

405020

theoretical discussion of fly-wheels is followed by a discussion of belt and balance wheels for A.C. and D.C. generators with tables and empirical formulas, so that practical sizes for ordinary cases may be easily found.

A final chapter has been added on steam-engine details. The student is supposed to have had "Strength of Materials." From the empirical-rational formulas in this chapter, he may obtain practical answers which he can profitably compare with those derived from theory. The forms of the various details may be obtained from catalogues. This last chapter is due to the labor of students in Cornell and in the University of Wisconsin, supervised by Professors Barr and Gould.

While some students cannot afford the time to take up treatises on the gas-engine and on refrigeration in college, *every* student can afford to spend a week on those subjects. Two short chapters in this book include all the theory on those subjects which is given in quite large treatises. The student therefore discovers that books on those subjects should have no difficulties that he cannot master by himself if the occasion arise. It is, of course, realized that the short time so given can, in no sense, take the place of a regular course in these subjects if the student can find the time.

The thanks of the author are due to those whose matter is quoted in the text and especially to Professor Peabody for his kind permission to insert Table IX, which is compiled from his latest tables.

W. H. P. C.

PREFACE TO THE FIRST EDITION.

THE instructor is seldom compelled to drive students who comprehend their text-books. The student's comprehension may be gauged by his ability to apply principles to the solution of problems containing legitimate difficulties. He cannot hope to overcome the difficulties that are inherent in the application of a number of principles if his knowledge of these principles is foggy and inaccurate. Therefore it is only fair to the student that the text should be clear and its style attractive; numerous illustrations should be given; especial stress should be laid on fundamentals; the errors that he is liable to make should be pointed out; prolixity in details and undue terseness should be avoided, and it is of extreme importance that a proper sequence of subject development should be maintained not only in the main subdivisions but also in every paragraph and sentence. All subjects in a technical course should be valuable not only for the instruction they give but also for the opportunity they present to train the student to think. The major value of text-books should be instructional. This value the student develops in his home study. The instructor brings out the training value of the subjects by problems of proper complexity.

This book possesses the following characteristics:

The history of the steam-engine has been omitted. After a student has advanced far enough to appreciate its import, the story of the development of heat motors may be given by the instructor. The first chapter is devoted to a bird's-eye view of the entire subject—with illustrations of the main elements of a steam-engine plant—and to the general relations of the different

forms of energy. Similarly, each subsidiary subject is opened by a general picture of that subject, so that the general relations of the parts may be seen.

While an earnest effort has been made to make the work simple, no principles have been omitted that should be contained in a work intended for undergraduate students of college grade. The Committee on Standard Rules of the American Society of Mechanical Engineers have formulated rules that should be studied by every student. These rules have been incorporated in the text in positions dependent upon the development of the subject. In this way duplication of the same matter has been avoided.

In the development of a new subject, students put the greatest stress of their attention upon the phases first presented, and then lightly assume that they can make the necessary modifications for the more complex cases. On this account, and because it is easier to pull down than to build up, the author has always developed the most complex case first and then shown the derivative or more simple forms. This inversion of the usual method gives a better picture of the subject in its entirety.

In developing a complex subject many formulas are derived. In no way can these formulas be deemed of equal importance. In so far as the *student* is concerned, the formulas that give answers most directly are usually of the least importance. Memorizing the derivation of formulas or substituting in them is of little value. And yet there are about two dozen formulas that should be so well known that they are, in effect, memorized. These are mother, backbone, or fundamental formulas. All problems, either literal or numerical, should start with one or more of these formulas. Their incessant repetition brings a comprehension that can be attained in no other way.

The text calls for many complete designs. These, of course, may be more or less crude, but they are of great value in developing much unexpected ignorance of principles and giving definiteness to the student's conception of a machine or of its action. For example, few books complete the design of both ends of a slide-valve and draw both indicator-cards when a finite connecting-rod is used. If the instructor insists on the student making

a complete design, a number of mistakes will be made almost inevitably.

Attention is called to the method of drawing indicator-cards for compound engines directly from round numbers. The ease with which the different points on the diagram are found enables the effect of changes (as, for instance, in the L.P. cut-off or in the receiver volume) to be seen at once in the varying areas of the cards. Of course the object aimed at is the comprehension of principles.

The fundamental principles of thermodynamics are applied not only to the steam-engine but also to gas-engines and gas-producers, refrigerating machines, steam turbines, and boiling in a vacuum. In the discussion of these machines vague generalities have been avoided, even if the discussion is limited to the application of general laws. The endeavor has been to make the foundation broad and strong enough to carry any superstructure that the instructor wishes to erect on it. The discussion on steam turbines starts with elementary mechanical principles of jet action, and by a step-by-step advance (omitting no proof, giving no outside references, and using diagrammatic sketches freely) a definite picture of the machine is built up.

The author appreciates the courtesy of Professors Carpenter, Peabody, Reeve, Stodola, Thomas, and Thurston's heirs and that of the American Society of Mechanical Engineers and the American Society of Naval Engineers in giving free permission to use either text or plates of their publications. The author also thanks those manufacturers who loaned cuts of their productions.

Letters containing honest criticism, suggestions, problems, or encouragement will be appreciated by the author and publishers.

W. H. P. C.

CONTENTS.

CHAPTER I.

PAGE

REVIEW OF ELEMENTARY PRINCIPLES AND GENERAL VIEW OF STEAM-ENGINE PLANT 1

Elementary Principles, 1. Work and Torque, 2. Energy, 2. Various Forms of Energy, 3, 4. Temperature, 5. Thermal Unit, Mean and Standard, 5. Thermometers, 6. Absolute Temperature, 7. First Law of Thermodynamics, 8. Mechanical Equivalent of Heat, 9. Second Law of Thermodynamics, 9. Apparatus in a Steam-engine Plant, 10. Steam-boiler, 10. Draft, 13. Separator, 13. Origin of all Power, 15. Action of Steam in a Steam-engine, 15. Bearing Details, 17. Corliss Cylinder Details, 16. Governor Details, 19. Cross-section of Cylinder, 20. Plan and Side Elevation of Cylinder, 21, 22. Surface Condensers, 23. Air Pump, 23. Circulating Pump, 25. Jet Condenser, 26. Bourdon Gage, 27. Mercury Column, 28. Rates versus Quantities, 30. Horse-power Definitions, 31. Rates Equivalent to a Horse-power, 32. Brakes, 35. Efficiencies, 35. Heat Value of One Pound of Coal from Chemical Analysis, 36. Boiler Horse-power, 36. Usual Rates of Evaporation in Boilers, 36. Calculation of Grate Areas, 37. Usual Steam Consumption of Engines and Pumps, 37. Power for Electric Lighting, 39. Boiler Horse-power and Pump Displacement for Electric Plants, 39. Combining Efficiencies, 40. Heat Consumption of a Steam-engine Plant, 41. What becomes of Heat-units, 44. Names of Engines, 44.

CHAPTER II.

STEAM-ENGINE INDICATOR AND ITS CALIBRATION 46

Steam-engine Indicators, 46. Reducing-levers, 58. Reducing-wheels, 59. Method of Taking Indicator-diagrams, 61. Care of Indicator, 63. Actual Point of Cut-off, 65. Inertia of Indicator Piston, 65.

CHAPTER III.

CURVES AND THE WORK OF EXPANSION 68

Method of Drawing Hyperbolas, 68. Commercial Cut-off, 70. Clearance, 72. Ratio of Expansion, 72. Finding the Indicated Horse-power, 73. Testing Indicator-springs, 74. Isothermal Expansion Curve, 77. Diagram Factor, 81. Elimination of Clearance Steam, 84.

CHAPTER IV.

PAGE

ZEUNER AND BILGRAM VALVE-DIAGRAMS AND DESIGN OF PLAIN SLIDE-VALVES 85

Throw of Cranks and Eccentrics, 85. Piston Travel with a Finite and an Infinite Connecting-rod, 86. Slide-valve Definitions, 88. Width of Port and Port Opening, 90. Angle of Advance, 92. Valve-diagram, 93. Geometrical Relations of Elements of the Zeuner Diagram, 97. Valve-diagram Problems, 99. Bilgram Diagram, 103. Dimensions of Steam Ports and Pipes, 110. Practical Considerations in Design, 111. Formulas, Tables, Diagrams for Loss of Head in Steam and Air Pipes, 115. Pipes of Equivalent Carrying Capacity, 119. Defective Indicator Diagrams, 122–125.

CHAPTER V.

MEASURING THE EFFECTS OF HEAT 126

Effects of Heat, 126. Molecular Motion, 127. Evaporation, 127. Elemental Effects of Heat, 130. Specific Heat, 131. Specific Heat of Solids and Liquids, 132. Specific Heat of Gases, 132. Specific Heat of Gases at Constant Volume, 134. Specific Heat of Gases at Constant Pressure, 134. Fundamental Equation of Perfect Gases, 135. Boyle's Law, 137. Charles' Law, 137. General Expansion Curve, 139. Adiabatic Curve, 141. To Draw the Curve $PV^n = C$, 143. Logarithmic Cross-section Paper and Method of Laying-off PV^n Curves, 144. Relation between T, V, and P in Adiabatic Expansion, 148. Heat Energy Represented by Areas, 148. Area Equal to Heat in a Perfect Gas, 149. Area Equal to Heat Added when the Gas is Heated at Constant Volume, 149. Area Equal to Heat Added when the Gas is Heated in any Manner, 150. Area Equal to Heat Added when the Gas is Heated Isothermally, 124. General Fundamental Equations of Heat Added 152. Carnot Cycle, 154.

CHAPTER VI.

MEASURING THE EFFECTS OF HEAT ON WATER AND STEAM 160

Melting Solids, 160. Boiling-point of Water, 160. Heat of the Liquid, 162. Expansion of Water when Heated, 163. Vaporizing Water, 163. Heat in and Heat Required to Produce Steam, 165. Changes in Regnault's Tables, 167. Quality of Steam, 169. Superheated Steam, 170. Equivalent Evaporation, 170. Calorimeters, 172. Determination of Water Equivalent, 176. Normal Reading, 178.

CHAPTER VII.

PAGE

MEASUREMENT OF HEAT LOSSES 180

Causes of Wetness of Steam, 180. Foaming, 181. Non-conducting Coverings, 181. Initial Condensation, 186. Laws of Compression of Steam, 188. Weight of Steam Accounted for by the Indicator, 191. Dry-steam Fraction, 193. Hirn's Analysis, 194. Heat Interchanges, 198. Example of Hirn's Analysis, 198. Tables to Find Actual Steam Consumption of Four-valve and Corliss Engines both Condensing and Non-condensing, 201. Actual Results in Practice, with Leaky Valves, 204.

CHAPTER VIII.

ENTROPY 207

Entropy, 207. Construction of Water-line, 210. Construction of Steam-line at Constant Pressure, 212. Construction of Saturation Curve, 213. Construction of Adiabatic Expansion Line, 214. Work done during Adiabatic Expansion, 215. Velocity of Steam passing through a Nozzle, 216. Construction of Constant Volume Line, 219. Work done when the Curve of Expansion is the Curve of Constant Steam Weight, 222. Construction of Constant Heat Curve, 224. Deriving a Temperature-entropy Diagram from an Indicator-diagram, 225. Carnot Cycle, 228. Rankine Cycle, 228. Ratio of Economy of an Engine to an Ideal Engine, 229. Temperature-entropy Diagram of a Real Engine, 230.

CHAPTER IX.

CONDENSERS AND AIR-PUMPS 232

Jet Condensation, 232. Jet Condensers, 233. Air Leaks, 234. Design of Jet Condensers, 234. Barometric Condensers, 236. Syphon or Ejector Condensers, 238. Surface Condensers, 239. Amount of Cooling Water, 241. Heat Transfer through Metals, 242. Professor Perry's Theory of Transfer of Heat, 243. Finding the Mean Difference of Temperature between Heating and Cooling Fluids, 245. Principles of Open and Closed Feed Heaters, 248. Relative Value of Heaters and Purifiers, 254. Heating Surface in Feed Heaters, 255. Discussion of the Rate of Heat Transmission in Condensers, 257. Contraflo Condensers, 260. Thermal Efficiency, 263. Economy in Vacuum Production, 264. Surface Section Ratio, 265. Cooling-towers, 265. Correct Absolute Condenser Pressure, 267. Wet Vacuum-pump Design, 268. Efficiency of Air-pumps under Variable Loads, 269. Edwards' Air-pump, 272. Dry-air Pump, Design 273. Practical Air-pump Air-pump Ratios, 274. Air-pump Cards, 275. Definitions of Air-pumps, 276. Design of Air-pump for Surface Condenser, 278. Wet Vacuum-pump for Jet Condenser, 281. Dry Air-pumps for Counter-current Barometric Condenser, 282. Cooling Air in Condensers, 282.

CHAPTER X.

PAGE

SMALL AUXILIARIES 285

Feed-pump Cards, 286. Feed-pump Design, 287. Reciprocating Circulating-pump Design, 288. Air-chambers on Circulating Pumps, 289. Centrifugal Circulating-pump Design, 290. Injectors, 292. Weight of Feed-water per Pound of Steam, 293. Efficiency of Injectors, 294. Operating Injectors, 294. Reheaters, 297. Oil and Water Separators, 298.

CHAPTER XI.

MULTIPLE-EXPANSION ENGINES 300

History of Multiple-expansion Engines, 300. Record Tests made in the Last Five Years, 303. Laying Out Theoretical Cards of Compound Engines, 304. Tandem Compound without a Receiver, 306. Tandem Compound with a Receiver, 308. Cross Compound, L.P. Cut-off before Half-stroke, 310. Cross Compound, L.P. Cut-off after Half-stroke, 313. To Find the Size of the Cylinders of a Compound Engine, 315. To Combine the Indicator-cards from a Compound Engine, 317. True Ratio of Expansion in Compound Engines, 320. Diagram Factor in Compound Engines, 322.

CHAPTER XII.

REVOLUTION CONTROL 326

Fundamental Equations, 328. Centrifugal Force, 329. Kinetic Energy, 330. Fly-ball Governor, 327. Sensitiveness, 333. Practical Forms of Fly-ball Governors, 334. Power of a Governor, 338. Friction of a Governor, 338. Adjustable Eccentrics, 339. Valve-diagrams, Swinging Eccentrics, 341. Shaft-governors, 343. Angular Acceleration, 347. Springs, 347. Inertia Governors, 348. Link-motion, 352. Open and Crossed Rods, 356. Position of the Saddle-pin, 358. Link-arc, 359. Equivalent Eccentric, 359. Buckeye-engine Valve, 360. Meyer Valve, 365. Corliss-engine Valves, 366. Setting Corliss-engine Valves, 366. Poppet-valves, 370.

CHAPTER XIII.

SPEED VARIATION CONTROL 373

Turning Effort in the Crank-shaft, 373. Net Steam-pressure, 374. Variable Velocity of the Piston, 375. Pressure Required to Accelerate the Reciprocating Parts, 376. Reciprocating Parts Considered as Concentrated at the Center of the Crank-pin, 377. Accelerations, Finite Connecting-rod, 379. Pounding of the Engine, 380. Tangential Pressure Curves, 382. Approximate Formula for a Fly-wheel, 384.

PAGE

Design of Belt Wheels, 386. Empirical Formulas for Weight of Balance Wheels for Engines Direct-connected to A.C. or D.C. Generators, 387. Analysis of Rites Inertia Governor Stresses, 390. Counterbalancing, 400. Shaking Forces, 403. Calculation of Phase Departure of Directly-connected Engines, 405.

CHAPTER XIV.

STEAM-ENGINE TESTS 411

Rules for Conducting Steam-engine Tests, Standard Rules, A.S.M.E. Object of the Test, 411. General Condition of the Plant, 412. Dimensions, 414. Coal, 415. Calibration of Instruments, 415. Leakage of Steam, Water, etc., 419. Duration of Test, 421. Starting and Stopping a Test: (*a*) Standard Heat Test and Feed-water Test of Engine; (*b*) Complete Boiler and Engine Test, 422. Measurement of Heat-units Consumed by the Engine, 424. Measurement of Feed-water or Steam Consumption of an Engine, 425. Measurement of Steam used by Auxiliaries, 427. Coal Measurement, 428. Speed, 429.

CHAPTER XV.

SUPERHEATED STEAM AND STEAM-TURBINES 431

Superheated Steam, 431. Foster Superheater, 432. Purpose of Superheating Steam, 434. Thermal Laws, 435. Heat Required to Produce Superheated Steam, 435. Intensity of Superheating Required to Prevent Initial Condensation, 435. Data of a Test of an Engine using Superheated Steam, 438. Entropy Diagram of Superheated Steam, 441. Superheated Steam in Compound Engines, 442. Durability of Superheaters, 443. Steam-nozzles, 443. Zeuner's Formula, 445. Velocity and Weight of Steam Discharged from a Nozzle, 446. Elementary Mechanical Principles Applicable to Jets, 447. Impulse Due to a Jet Moving on a Curved Blade, 449. Maximum Efficiency Under Various Conditions, 456. De Laval Steam-turbine, 456. Theoretical Design of De Laval Turbine, 458. Curtis Turbine, 459. Theoretical Design of Curtis Turbine, 460. Friction Losses in the Curtis Type, 461. Parsons' Steam-turbine, 465. Analysis of Parsons' Steam-turbine, 473. Hamilton-Holzwarth Steam-turbine, 477. Combination of Engines and Turbines, 478. Turbine Auxiliaries, 478.

CHAPTER XVI.

GAS-ENGINES AND GAS-PRODUCERS 480

Lenoir Cycle, 480. Beau de Rochas Cycle, 480. Practical Details and Data, 482. Calorific Power of Compound Gases, 484. Rise in Temperature in Gas Combustion, 485. Producer-gas, 486. Gas from Soft Coal, 489. Calculation of Theoretical Pressure in Gas-engines, 490 Indicator- and Entropy-cards of Gas-engines, 490. Diesel Cycle, 496

PAGE

Data from a Diesel Engine Test, 499. Rules for Conducting Gas- and Oil-engine Tests, Code of 1901, 501: Objects of Tests, 501; General Condition of the Engine, 501; Dimensions, 501; Fuel, 502; Calibration of Instruments used in the Tests, 502; Duration of the Test, 504; Starting and Stopping a Test, 504; Measurement of the Fuel, 504; Measurement of the Heat-units Consumed by the Engine, 505; Measurement of Jacket-water to Cylinder or Cylinders, 506; Indicated Horse-power, 506; Brake Horse-power, 506; Speed, 506; Recording the Data, 507; Uniformity of Conditions, 507; Indicator-diagrams and their Analysis, 507; Standards of Economy and Efficiency, 507; Heat Balance, 508; Report of Tests, 509; Temperatures Computed at Various Points of the Indicator-diagram, 509. Complete Form for Gas- and Oil-engine Tests, 512–515.

CHAPTER XVII.

BOILING IN A VACUUM 516

General Description of Evaporation in Vacuo in Mulitple and Single Effects, 516. Theory of the Multiple Effect, 519. Theory of Single Effect or Vacuum-pan, 520. Double Effect, 521. Triple Effect, 522 Measurement of Density of Liquids, 524. Description of a Vacuum-pan, 527.

CHAPTER XVIII.

REFRIGERATION 530

Theory of Refrigerating by Dense Air, 530. Ammonia-compression System, 532. Entropy-diagram of a Compression System, 534. Refrigeration Units, 536. Complete Form for a Steam-engine Test, 537–543.

CHAPTER XIX.

CONSTANTS FOR LOW-SPEED STEAM-ENGINE DESIGN 544

Piston-rod, 544. Connecting-rod, 544. Main Journal, 545. Crank-pin, 546. Cross-head Pin, 548. Cross-head Shoes, 549. Steam Ports and Pipes, 549. Exhaust Ports and Pipes, 550. Belting, 550. Weight of Engine, 551. Steam Cylinder Details, 551. Fly-wheels, 553.

CONSTANTS FOR HIGH-SPEED STEAM-ENGINE DESIGN 556

Piston-rod, 556. Connecting-rod, 556. Main Journal, 557. Crank-pin, 558. Cross-head Pin, 560. Cross-head Shoes, 561. Cylinder Details, 561. Steam Ports and Pipes, 563. Exhaust Ports and Pipes, 563. Belting, 563. Fly-wheels, 564. Reciprocating Parts, 564. Weight of Engine, 565.

APPENDIX.

PAGE

Table I. Properties of Familiar Substances 571
" II. Hyperbolic or Naperian Logarithms 572
" III. Heating Values of Various Substances 572
" IV. Oxygen and Air Required Theoretically for the Combustion of Various Substances 573
" V. Relative Humidity, Per Cent 573
" VI. Weights of Air, Vapor of Water, and Saturated Mixtures of Air and Vapor at Various Temperatures and Constant Pressure 574
" VII. Entropy of Water and Steam 575
" VIII. Saturated Steam 576–581
" IX. Saturated Steam Entropy (for Condenser Pressures)..... 582
" X. Mean Pressures for Various Methods of Expansion 584
" XI. Mean Pressures for Various Methods of Expansion 585
" XII. Mean Pressure Ratios 586
" XIII. Terminal Pressure Ratios 587
" XIV. Flow of Steam through Pipes 588
" XV. Specific Heat (C_p) of Superheated Steam at Constant Pressure 589

ENTROPY DIAGRAM 590

INDEX 591

LIBRARY
OF THE
UNIVERSITY
OF
CALIFORNIA

THE STEAM-ENGINE AND OTHER HEAT-MOTORS.

CHAPTER I.

REVIEW OF ELEMENTARY PRINCIPLES AND GENERAL VIEW OF STEAM-ENGINE PLANT.

THE student will avoid much unnecessary confusion by keeping always clearly in mind:

1. The difference between an essentially elementary and a compound quantity.
2. Elementary quantities can only equal elementary quantities.
   Twisting moments can only equal twisting moments.
   Compound quantities, derived from work or changeable into work, can only equal compound quantities that can be derived from work or can be converted into work.
3. The two sides of an equation must be similar in kind—homogeneous.
4. A pull, push, torque, or work cannot exist unless there is at the same time an opposing pull, push, torque, or work of exactly equal magnitude.
5. While in nature neither matter nor energy is ever created or destroyed, there is an unceasing tendency to perfect change.
6. He should know the fundamental formulas of a subject as he knows the multiplication-table, and he should formulize his work as much as possible and substitute in formulas as little as possible.
7. Clearness is often obscured in the terseness of a derived formula.

Force, whether it be a push, pull, or an attraction—such as gravitation,—is an elementary quantity. Linear distance is also elementary. Unlike force it may be compounded with itself, as in areas and volumes.

Force and distance may be combined to form two distinct compounds which should never be confounded with nor equated to one another. Force overcoming an equal resistance through a distance does work. The force is exerted THROUGH a distance. One pound lifted a foot is a foot-pound, because there is a resistance of one pound through a foot. One pound dragged a foot horizontally on a rough surface does not require a foot-pound of energy, because the resistance ordinarily is not one pound. If the coefficient of friction is 4%, then the work would be .04 foot-pound.

Force acting AT a distance produces a turning moment, twist, or torque. Here there is no motion. If motion is impending, it is not in the direction of the distance factor of the twisting moment. A twisting moment and work may exist at the same time, as in a moving crank. Imagine all the forces acting on a crank-pin reduced to a single force (that may vary in amount), always perpendicular to the crank-arm. The torque at any instant is the force, at that instant, multiplied by the length of the crank-arm =the distance from the center of the crank-pin to the center of the shaft. The work per revolution would be the mean force multiplied by the distance that the center of the crank-pin moves in a revolution.

PL = work or twisting moment (according to the conditions) in foot-pounds, foot-tons, or inch-pounds, according as

P = pounds or tons;

L = feet or inches { length of arm in twisting moments; / distance the force moves through in work.

EXAMPLE 1. A winch 8 inches in diameter has two crank-handles, 18 inches radius, 180° apart. Two men use it to raise buckets of stone, whose total weight is 200 pounds, from a hole 40 feet deep. Neglect friction. What torque does each exert? What work does each man do per revolution? What is the best direction for each man to exert his strength?

Work may be stored up; it is then called energy. Energy occurs in many forms that may be grouped into the three divisions—potential, kinetic, and vibratory.

Students are liable to confuse potential energy and torque. When work is stored up in the form of potential energy, all motion has disappeared; for example, the tightened spring in a watch or the water in an elevated tank. In these cases there is no motion, but we notice that it takes force acting through a distance to wind the spring or raise the water. Under theoretical conditions the spring in unwinding and the water in descending from the elevated tank have the power to perform as much work as was expended originally in tightening the spring or raising the water. It is its *potency* or power to do work, if required, that gives the name potential to this form of energy.

Kinetic energy is energy of motion. As the number of revolutions of the fly-wheel increases above the normal it is absorbing foot-pounds of work that it will give out later in slowing down. The rifle-bullet with small mass must have high velocity to do the work of penetration. Any mass moving in any direction at any velocity possesses kinetic energy.

Energy of vibration seems to be made up of kinetic and potential energy, and yet it is quite different from either. The most obvious example, of course, is the pendulum. At the bottom of its swing all its energy is kinetic, at the top it is all potential. Between the top and the bottom there is a continual interchange: descending the pendulum is converting potential into kinetic energy, and ascending this process is reversed.

The main characteristics of this form of energy are the small amount of energy involved and the length of time that it persists.

Waves are vertical vibrations of the surface-water; sound is a vibration of the air, and light is a vibration of the luminiferous ether. Great distances are traversed by waves and sound, but they are insignificant when compared to the millions of millions of miles travelled by the feeble vibration called light. As the amount of energy is so insignificant the ether that transmits the vibrations must be wonderfully adapted for the purpose.

Below is given a classification of different forms of en-

ergy in which the forms already given appear as subdivisions.

Form of Energy.	Factor of Intensity.		Factor of Extent.	
	Name.	Unit of Measurement.	Name.	Unit.
Mechanical, pot.	Distance	Feet	Force	Pounds
Mechanical, kin.	Velocity	Feet-per-sec.	Mass	Pounds $\div G$
Electrical, pot...	Potential	Volts	Charge	Coulombs
Electrical, kin...	Potential	Volts	Current	Amperes
Chemical, pot...	Affinity	.....	Mass	Molecular weight
Chemical, kin...	.....	.....	.....	.....
Thermal, kin....	Temperature	Degrees (Fahr.) absolute	Entropy	.....
Thermal, pot....	Temperature	Degrees (Fahr.) absolute	Entropy	.....

From Reeve, Thermodynamics of Heat-engines.

Most of the forms of energy tabulated are seen to be made up of two elemental factors and hence must be compound and of the second degree.

It may be assumed that there is evidence in plenty that each of the above forms of energy can be transformed into one or more of the other forms above given. They must all be compound, since a number of them are evidently so. The student is probably more or less familiar with all the forms save the last one. We shall assume that we have shown that thermal energy or heat is *compound* and is made up of *two factors*.

If these forms of energy can be converted into one another they must all be either simple or compound. If compound, they must be compound in the same degree (just as an area cannot equal a cube), and ultimately it would seem that they ought to be reducible to the product of the same factors. Further, it is not necessary, in any conversion of one form into another, that one of the above forms of energy should be transformed into one other form alone. Indeed this rarely takes place. But if any quantity in an equation of conversion is of the second degree, every quantity connected to the others by the + or − sign must also be of the second degree.

The following table gives tersely examples of the change of each form of energy into each of the others:

Mechanical into	Electrical	Dynamo.
	Chemical.	Cartridges (Trigger striking)
	Thermal.	Friction.
Electrical into	Mechanical	Electric motor.
	Chemical.	Electrolysis.
	Thermal.	Electric lights.
Chemical into	Mechanical	Work done in collecting a gas arising from dissolving a solid in acid.
	Electrical.	Wet battery.
	Thermal.	Combustion.
Thermal into	Mechanical.	Expansion of furnace walls.
	Electrical.	Electropile.
	Chemical.	Growth of vegetation.

Ex. 2. Give other examples of all the different forms of energy and of the change from one form into one or more other forms.

Ex. 3. Give all the different forms of energy that appear when a heavy gun is fired at night.

Temperature.—Temperature is a quality of heat and may be said to measure its INTENSITY. It is obviously one of the factors of heat, for by doubling the intensity of heat, as measured from a true zero, we double the heat in a body. It is one of the factors of heat, as a foot is a factor of a foot-pound. It is not heat any more than a foot can in any way be a foot-pound. Temperature is elemental in character. Its unit of measurement is called a degree. Each degree on any assumed scale, such as the Fahrenheit, Centigrade, or Réaumur, is supposed to measure equal variations of intensity of heat. But the variation measured by the Fahrenheit degree is only 5/9 of that measured by the Centigrade degree and 4/9 of that of the Réaumur. This arises from the fact that the same variation of intensity of heat—the variation that exists between the temperature of freezing and boiling water at atmospheric pressure—is divided into 180 parts on the Fahrenheit scale, into 100 parts on the Centigrade scale, and into only 80 parts on the Réaumur scale.

Thermal Unit.—Two such units are available, the *standard* British thermal unit, B.T.U., which is the quantity of heat required to raise one pound of water from 60° F. to 61° F., and the *mean* B.T.U., which is the 180th part of the heat required to raise water from the freezing to the boiling point. The latter is the more easily and certainly determined and corresponds to the *mean* calorie now becoming standard abroad.

Calorie.—The French unit of heat is a calorie. It is the measure of the quantity of heat that is required to raise one kilogram (2.2 pounds) of water from 4° to 5° Centigrade or $\frac{1}{100}$ of that required to raise one kilo of water from 0° to 100° C.

As heat is a compound quantity, its units of measure, a B.T.U. and a cal. are compound. One calorie = 3.968 B.T.U.

Cold.—Since heat is a form of energy it has a positive existence. This cannot be said of cold. There is no such thing as a quantity of cold. All bodies, then, are hot, i.e., possess heat. Some are hotter than others. When the latter are said to be colder than the former, the term colder is to be interpreted as less hot.

Minus Temperature and Minus Pressure.—Similarly we shall find that there are no such quantities as minus degrees of temperature or minus pounds pressure. In fact we must take particular pains to have all measurements in absolute units, viz., measured from a real zero.

The Fahrenheit and Centigrade zeros are purely arbitrary. At a true zero of temperature a body will possess no heat, or, in other words, the molecules of the body will be at rest, all vibration having ceased. Now the *boiling*-points of solid hydrogen, nitrogen, and oxygen are far below either of the above-mentioned arbitrary zeros, and hence the true zero must be still lower. While air is not a perfect gas, yet well-dried air will serve to make a good thermometer for the investigation of low temperatures.

Air-thermometer.—The principle of an air-thermometer is shown in Fig. 1. The bore is supposed to be absolutely uniform and the drop of mercury is supposed to be a frictionless, weightless piston, perfectly air-tight. Let the piston be any convenient distance from the bottom when the whole tube is immersed in a tub of water and melting ice, the temperature of the mixture being constant at 32° F. The air below the mercury must be entirely free of moisture. Measure accurately the distance the piston is from the bottom of the tube. The atmospheric pressure (supposed to be 14.7 pounds per square inch) is constant and is the sole pressure on the drop of mercury. The tube is now transferred to a vessel of clean distilled water boiling freely in the open air. The height to which our frictionless piston now rises

is now marked. The increase in volume when the work is properly done is 0.3654 times the original volume. This corresponds on the Fahrenheit scale to a rise of 180°, so that the rise per degree is $\frac{0.3654}{180} = 0.00203 = \frac{1}{492.6}$ of the original volume.

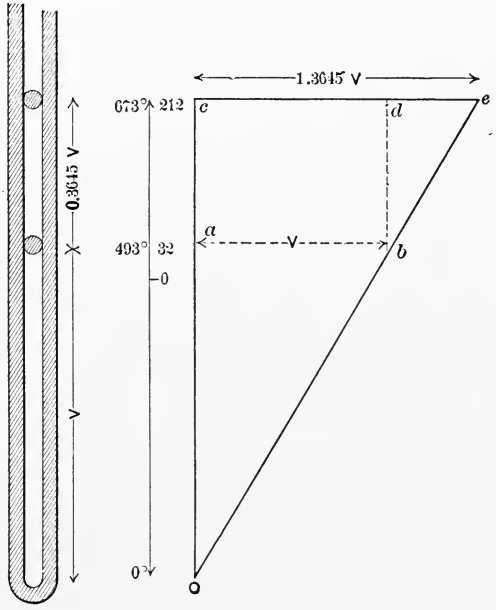

FIG. 1. FIG. 2.
Air-thermometer.

Absolute Temperature.—It is now evident that if we had cooled the air below the freezing-point, for each (Fahrenheit) degree of cooling the (original) volume, V, would have decreased $1/492.6V$, and, on the supposition that there would be no change of characteristics, the zero of volume, the zero of temperature, and the zero of heat possession would be 492°.6 below the Fahrenheit freezing-point or 460°.6 below the Fahrenheit zero.

In Fig. 2 the above calculation is shown graphically.

Let ab = initial volume;

ce = final volume;

oa = initial temperature absolute = T_1;

oc = final temperature absolute = T_2.

Then

$ce-ab:ab::T_2-T_1:T_1$, or $0.3654:1::180:T_1$. $\therefore T_1=492°.6$ F.A.

Hence the ordinary Fahrenheit temperature is converted into Fahrenheit absolute degrees by the addition of 460.6 degrees. In a similar way, the ordinary Centigrade degrees are converted into Centigrade absolute degrees by the addition of 273 degrees.

As all known gases have been liquefied, it is evident that none of them can be reduced to zero volume, as the law ceases to hold with a change of state. In the case of the so-called permanent gases the law has been shown to be true far below any temperature required for engineering purposes.*

The measurement of temperatures by thermometers seems a very elementary process. The difficulties are only appreciated when great accuracy is required. In theory, the mercury of the ordinary glass thermometer is supposed to expand equal amounts for equal increments of heat, the bore of the capillary tube is supposed uniform and to vary uniformly or not at all with the addition of heat, and the glass is supposed to be in such a molecular condition that the bore will not change with age. In accurate work, these quantities vary and accurate calibration is requisite before use. Some forms of pyrometers for the measurement of high temperatures depend upon the difference in expansion of copper and steel rods. In practice they do not work well. For very high temperatures the increase in electrical resistance of platinum-rhodium wires with increase of temperature is measured and the temperature is then calculated.

Ex. 4. Convert 77° F., 17° F., −13° F. to Centigrade degrees.

Ex. 5. Convert 25° C., 5° C., −15° C. to Fahrenheit degrees.

Ex. 6. Convert 79.36 B.T.U. to calories; 45 calories to B.T.U.

Ex. 7. Convert 350° F. to Fahrenheit absolute temperature; to Centigrade absolute temperature.

First Law of Thermodynamics.—Heat can neither be created nor destroyed. Heat and mechanical work are mutually convertible, and a definite ratio exists between the thermal units that disappear (or appear) and the foot pounds of mechanical work that appear (or disappear).

---

* See Journal Franklin Inst., Nov. 1906, page 375.

Joule determined this ratio as 772 foot-pounds to 1 B.T.U. More recently Rowland fixed the ratio as 778 foot-pounds to 1 B.T.U. The latter value will be used.

Joule allowed a known weight to descend a known distance, doing mechanical work by revolving a paddle in a vessel filled with water. Due precautions were taken to prevent heat radiation as far as possible. The heat that did radiate was calculated. The tendency of the water to circulate with the paddles was destroyed by properly placed baffle-plates. The known weight descending slowly a known distance gave the foot-pounds of work, and a known weight of water heated a measured number of degrees of temperature gave the equivalent number of thermal units. Of course this experiment was performed many, many times with proper precautions. For instance, the containing vessel and the apparatus in the water became heated and this amount of heat had to be considered. One way to do this was to heat the apparatus to the maximum temperature before putting in the water at the original temperature. The apparatus would thus lose to the water as much heat as it would afterwards absorb.

Second Law of Thermodynamics.—Heat cannot pass from a cold body to a hot one by a purely self-acting process. Heat in many ways is compared to water. We say that water will not run up-hill. And yet, nothing is more common than water going up-hill. It is witnessed in the rising sap in the tree, in the evaporation of water, in all forms of water-working machinery. It is evident that the expression should be "water will not run up-hill unaided by some exterior agency." Similarly, heat flows unaided from a hot to a less hot body, but will not flow in the reverse sense, viz., from a cold to a hot body unless aid is received from some exterior source. In refrigeration, heat is made to flow from water into ammonia-gas at the same or a higher temperature by the following artifice. The ammonia-gas is compressed and cooled at the same time. Suppose that the heat abstracted is just equal to the heat that is added by compression. The result is *liquid* ammonia at the same *temperature* as the original gas. If the liquid ammonia is allowed to expand in pipes surrounded by water, the ammonia will abstract the heat that is required for

its gasification from the pipes and water. The actual flow of heat is from the water to the colder ammonia-gas. The final result of the whole process is that heat is, by the aid of mechanical work, taken from one body (the water) and put into another (the ammonia) that was originally warmer.

Steam-plant.—The most elementary form of steam-plant consists in:

A steam-boiler and chimney.
An injector or steam-pump to supply the boiler with water.
A steam-engine with the necessary piping.

In a complex system we may have:

Steam-boiler with mechanical grates.
Induced or forced draft.
Economizers.
Separators in the pipe-line.
Multiple-cylinder engines or steam-turbines.
Steam-jackets around the cylinders or in the cylinder-heads.
Some form of exhaust-reheaters.
Some form of steam-condenser.
Air-pump.
Circulating pump.
Feed-water pump.
In non-condensing engines the exhaust-steam may pass through a feed-water heater.

Steam-boiler (Fig. 3).—The furnace, the heat-transmitting surface, and the chimney must be designed so that a certain amount of coal can be regularly burned and the resulting heat utilized in the formation of steam with the greatest practical economy. The furnace-grate must be placed in such position that the fireman is able not only to distribute the coal properly but also can keep the incandescent fuel properly levelled, free from holes and clear of clinkers Great economy of combustion is only secured by the admission of the proper amount of air at the right time. When bituminous coal is thrown on the front of the grate it needs very little air as long as it is only drying out and heating up. When

the coal commences to give off combustible gases the air-supply should be proportionally increased.

The heating-surface of the boiler is that surface (above the center of gravity of the fire) which has water on one side and hot

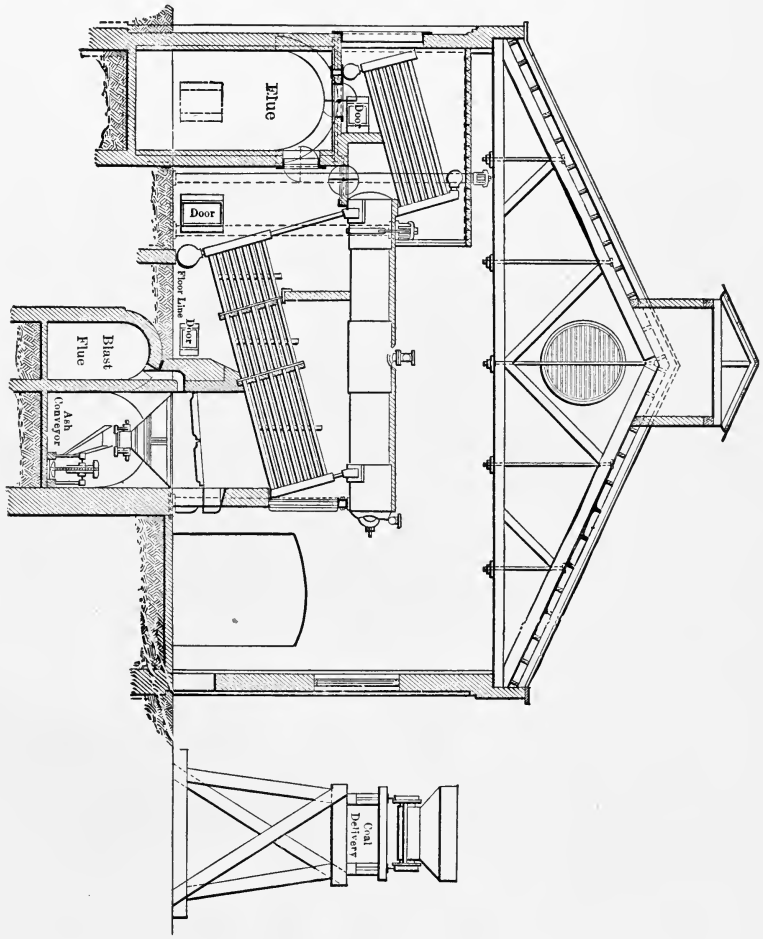

FIG. 3. Steam-boiler and Economizer.

gases on the other. It should be so arranged that repairs may be easily made, the cleaning of either the inside or outside of the heating-surface should not be difficult, and its position should be such that the steam-bubbles forming on it should free themselves and rise easily.

The draft, whether produced by a chimney or by means of fans, should be ample at all times. Chimney-draft is called nat-

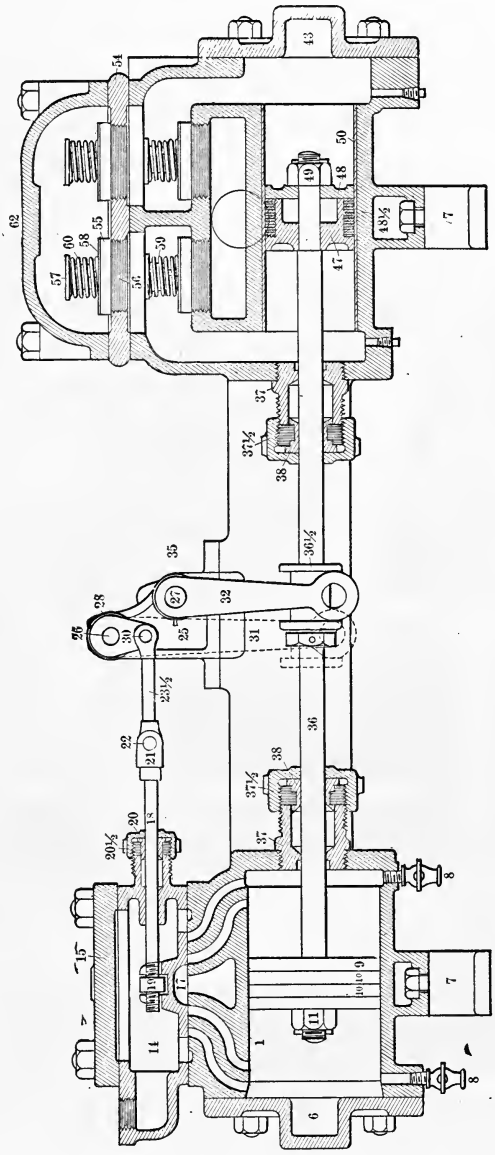

Fig. 4. Section of Feed-water Pump.

ural draft, while all forms of mechanically produced draft are termed artificial draft.

DESCRIPTION OF THE PARTS ILLUSTRATED IN FIGURES 4 AND 8.

Part No.	Name of Part.	Part No.	Name of Part.
1	Steam-cylinder (1 and 2) (pump body in small duplex pumps).	16½	Steam-pipe screw-flange.
*2	Cushion-valve.	17	Slide-valve.
*3	Cushion-valve stuffing-box.	17½	Auxiliary valve.
*4	Cushion-valve stuffing-box follower.	18	Valve-rod.
5	Hand-wheel.	18½	Piston-valve rod.
6	Steam-cylinder head.	19	Valve-rod nut.
7	Steam-cylinder foot.	19½	Tappet-nut.
8	Drain-cock.	20	Valve-rod gland.
9	Steam-piston.	20½	Piston-valve-rod gland.
9½	Piston-valve.	20¾	Valve-rod stuffing-box nut.
10	Steam-piston ring.	21	Piston-valve rod stuffing-box nut.
10½	Piston-valve ring.	22	Valve-rod head.
11	Steam-piston nut.	23	Valve-rod-head pin.
12	Exhaust-flange.	23½	Long valve-rod link.
12½	Exhaust-pipe.	24	Short valve-rod link.
14	Steam-chest.	25	Cradle.
14½	Piston-valve chest.	26	Cross-stand.
15	Steam-chest cover.	27	Upper rock-shaft.
15½	Piston-valve-chest heads.	28	Lower rock-shaft.
16	Steam-pipe.	*29	Long crank.
			Short crank.

* Not shown on cuts or sectional drawings.

Artificial draft is easily regulated to effect the combustion of various kinds of fuel at different rates of combustion. Under proper management it makes more economic combustion possible by providing a more accurate regulation of the air-supply, poorer coal may be burnt, and a steadier supply of steam may be furnished independent of weather conditions.

Where the draft is produced by a chimney the temperature of the gases leaving the chimney is generally between 500° F. and 600° F. In Europe it is quite usual to put less heating-surface in the boiler than is usual in this country and then force the feed-water through the tubes of an economizer placed in the path of the gases to the chimney. With artificial draft it is possible to have the final temperature of the gases less than the temperature of the water in the boiler. This is done by having the coldest feed-water heated by the coldest gases (just entering the chimney) and the hottest feed (just entering the boiler) heated by the hot gases just entering the economizer (Fig. 3). If the boiler absorbs 70% of the heat of the fuel, a boiler and economizer together may absorb 82%. Against this saving must be charged the interest on the cost of the economizer and fan and on the value of the

space occupied, as well as the cost of running the fans and an allowance for depreciation and repairs.

Fig. 4 illustrates a section of a small piston-packed pump that may be used for feeding the boiler. On page 13 are given the names of all its parts, as well as those of the air-pump and jet condenser shown in Fig. 8. The student should familiarize himself not only with the names but also with the use of all the different parts. There are numerous methods of actuating the steam-valve of feed-pumps, and the best way to comprehend the mechanism is to take the pumps apart and put them together again and operate the pump. The work must be done over again if the pump does not work properly. For engine details, see pages 17–22.

Steam-separator.—Later it will be shown that it is extremely desirable that the steam entering any steam-cylinder should be as free from water as possible. Advantage is taken of the fact that water is much heavier than steam and, by causing the steam to whirl, centrifugal force carries the water to the circumference of the containing vessel. When this is accomplished great care must be taken to keep the water out of the line of action of the steam-current or it will be picked up again. An efficient separator should furnish dry steam to the engine. Fig. 5.

The Steam-engine.—It is usual to speak of the work done by the steam in a steam-engine. Strictly speaking this is incorrect. We shall find that the steam is an agent, just as the connecting-rod is, receiving a certain amount of energy in the boiler and very inefficiently delivering a very small part of it in the engine. We shall learn that the difference in temperature of the steam as it enters and as it leaves a steam-cylinder is greater than the difference in temperature of the hottest day in summer and the coldest day in winter. As the weight of steam entering and leaving a cylinder is the same, it is evident that a large amount of heat has disappeared. The engine has done work, however, and there must be some relation between the heat that has disappeared and the work that has appeared. At the very outset we see not only that the steam-engine is a heat-engine, but also the necessity of understanding the laws of heat and the laws governing the interchange of heat and mechanical energy. Thermodynamics is the science that treats of the relations of heat and mechanical work.

The origin of all the power of any steam-engine lies in the coal that is burnt on the boiler-grate. When we assume that a certain engine will make a certain number of revolutions, we either assume or we must provide sufficient boiler-power to deliver such a quantity of energy to the engine that the latter, with an efficiency of 3 to 15 per cent, will develop the required power. The boiler-power is determined by the amount of coal burnt and the efficiency of the boiler.

FIG. 5.
Stratton Separator.

If steam is admitted alternately to each side of a steam-piston, for evident mechanical reasons the motion of the latter is given to a piston-rod that moves backward and forward in the same straight line. Usually this motion is communicated to a cross-head, and the reciprocating motion of the latter is converted into a rotary motion by means of a connecting-rod and crank. Such an engine is called a double-acting engine. Where steam is admitted to only one side, the connecting-rod may be directly connected to a pivot-pin in the piston. When a plane can be passed through the connecting-rod and the crank-arm, the crank is said to be on a center. When the piston is nearest the crank it is on the crank center, when it is farthest away it is on the head center.

The action of steam in a steam-engine is as follows: The pressure of the steam from the boiler causes the piston to move through a part of its stroke to a point at which, by some kind of automatic mechanism to be described later, the steam-supply from the boiler is cut off. The piston must complete the stroke having only the diminishing steam-pressure and the energy stored up in the moving parts to supply the pressure necessary to overcome resistance.

If the crank-pin has a uniform motion, by Newton's First Law the resultant of all the pressures exerted on the crank-pin must exactly equal the resultant of all its resistances just as if the crank-pin were at rest. If at any time there is a difference, acceleration (change of velocity or variable speed) positive or negative immediately follows. It is evident, then, that variation in rapidity of motion causes the equality that must exist between the driving and resisting forces.

When the piston has reached the end of its stroke all the steam that produced its motion must be allowed to escape to some place of lower pressure, otherwise the piston on the return-stroke would compress the steam. Compression in excess lessens the amount of external work done, and is neither desirable nor economical, as the object of an engine is the production of external work.

The steam may be exhausted into:

(*a*) A receiver or vessel that will serve as a reservoir to hold the steam till it is fed into another cylinder working in a lower cycle of pressures than the preceding one.

(*b*) The atmosphere.

(*c*) A condenser.

After an engine has been started and is running regularly, it is evident that, when exhausting into a receiver, the amount of steam entering that vessel must exactly equal the amount leaving, as otherwise the pressure in that vessel would continuously increase or decrease, which would prevent the engine from working. The pressure in the receiver will fluctuate with the admission and emission of steam and may be greater or less than the atmospheric pressure.

When the steam exhausts into the atmosphere, the back pressure on the piston will be the barometric or atmospheric pressure increased by the pressure necessary to overcome the frictional resistances of the pipe system between the cylinder and the atmosphere. The usual assumed back pressure then is either 14.7, or more roughly 15 pounds per square inch where pipe friction may be neglected.

When the steam is exhausted into a condenser the back pres-

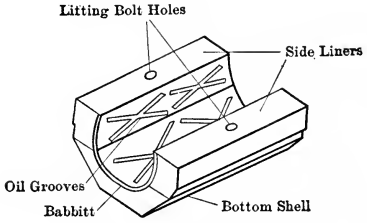

FIG. 6.—Lower Brass.

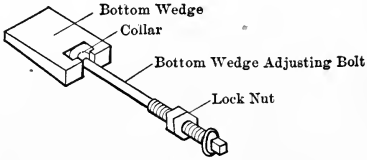

Main Bearing Bottom Wedge and Adjusting Bolt
(Furnished only when specially ordered)

FIG. 7.

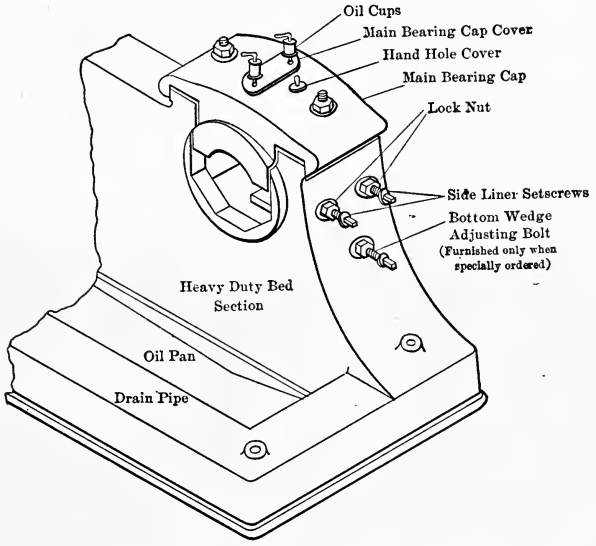

FIG. 8.—Bearing Details.

FIG. 9.—Corliss Cylinder Details.

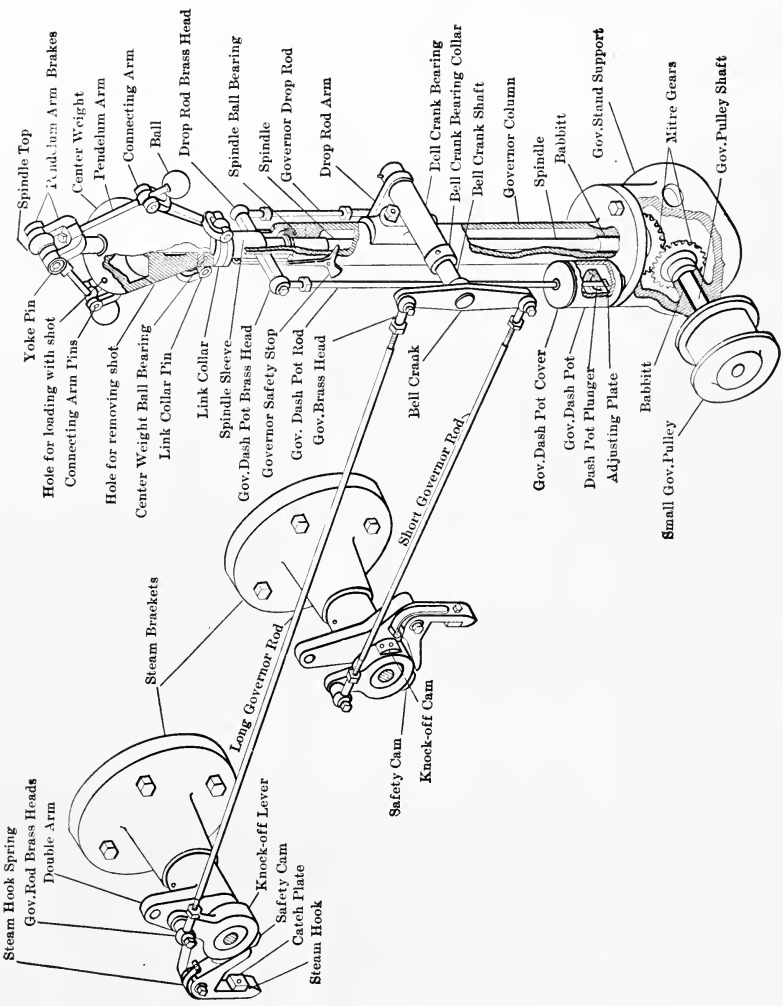

FIG. 10.—Corliss Engine Governor Details.

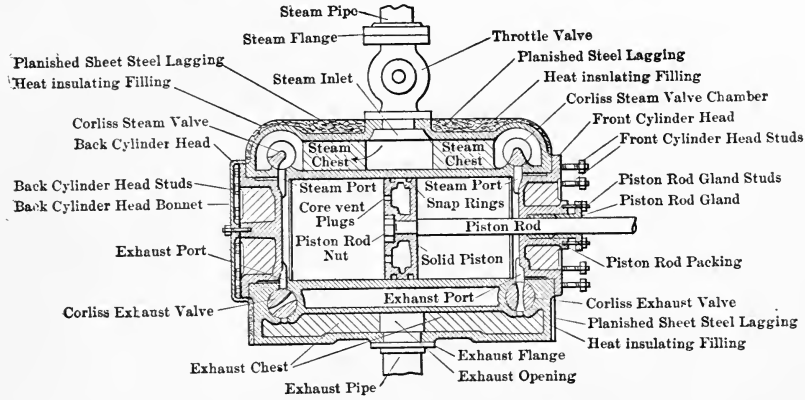

FIG. 11.—Cross-section of Corliss Cylinder.

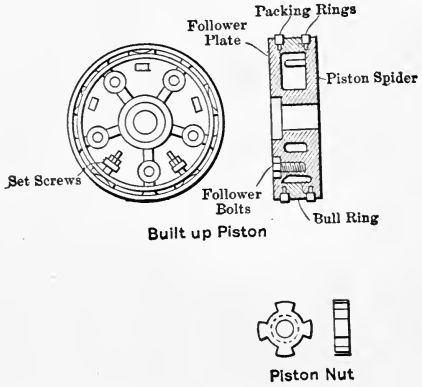

FIG. 12.—Piston Details.

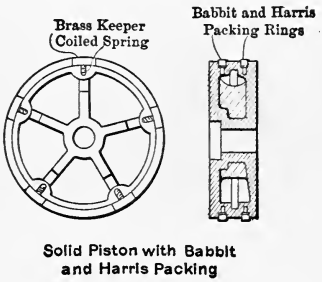

FIG. 13.

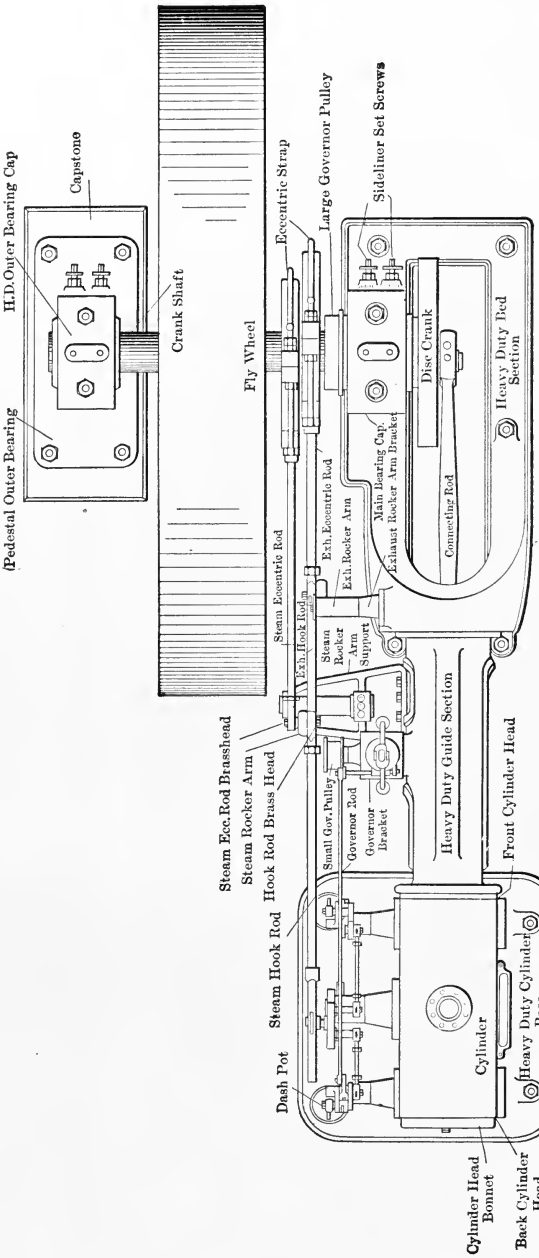

FIG. 14.—Plan of Corliss Engine.

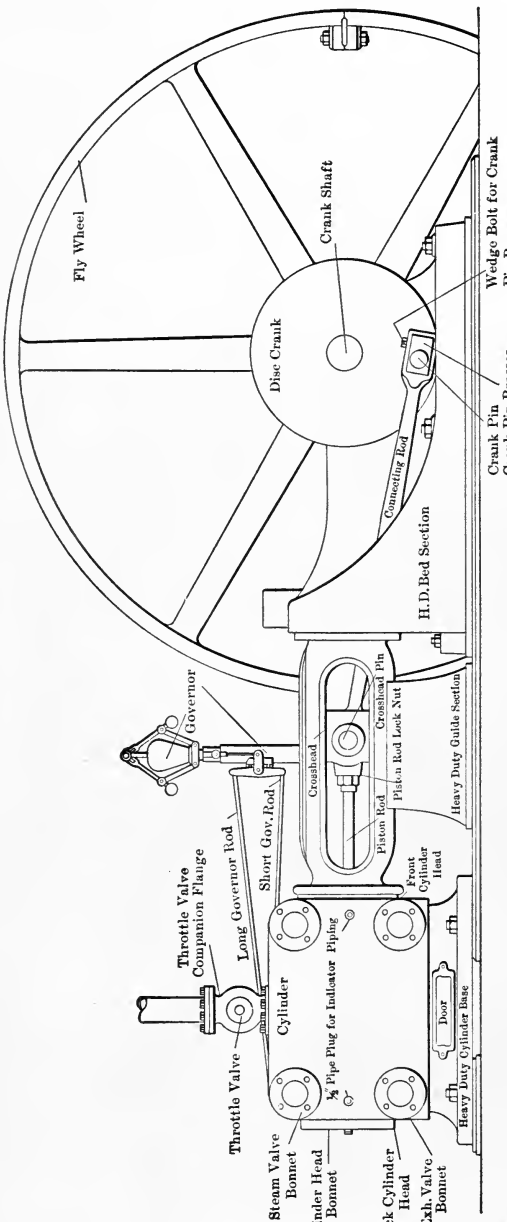

FIG. 15.—Side Elevation of Corliss Engine.

sure against the piston may be reduced to 1/2 pound per square inch above absolute zero of pressure with the very best condenser equipment, or to 3 pounds per square inch with an ordinary equipment. Keeping in mind that the temperature of steam depends in some way on the rate of vibration of the molecules of the steam, and its pressure depends on the rate or number of molecular impacts on the containing vessel, we readily see, when steam is deprived of 90% of its heat, and its volume reduced to 1/1500 of the volume it possessed when entering the condenser, that there must necessarily be a great reduction of pressure. The unavoidable pressure in the condenser would be that due to the vapor of the feed-water if there were no leakage of air through the stuffing-boxes and the joints of the condenser and exhaust-piping, and no air and other non-condensible gases in the feed-water. If these gases accumulated, it is evident that the back pressure might finally be greater than that of the atmosphere. Hence an air-pump properly designed and placed must be used to remove all the condensed steam, vapor, and air. This pump discharges its contents into a tank called a hot-well. The vapor and air escape into the atmosphere, and the solid water can then drain downwards into the suction-chamber of a feed-pump which forces it through the feed-pipe into the boiler. There are two principal methods of condensation:

(*a*) By means of a surface condenser.
(*b*) By means of a jet condenser.

Surface Condenser and Air-pump.—One form of a surface condenser with its necessary pumps is shown in Fig. 16. The exhaust-steam from the engine-cylinder enters the condenser at *A* and is divided into many streams by the scattering-plate *O*. The steam is condensed into water by coming into contact with the cool tubes and then flows down pipe *B* (closed to spaces *V* and *S*) into space below valves *S*. The suction valves, *S*, open upward.

It is well to keep in mind that there is no motion in steam, water, or air unless there is a difference of pressure. The exhaust-steam flows into the condenser only so long as the pressure there is less than the pressure in the cylinder. There is no such thing as the vacuum drawing or sucking in the steam. Hence we

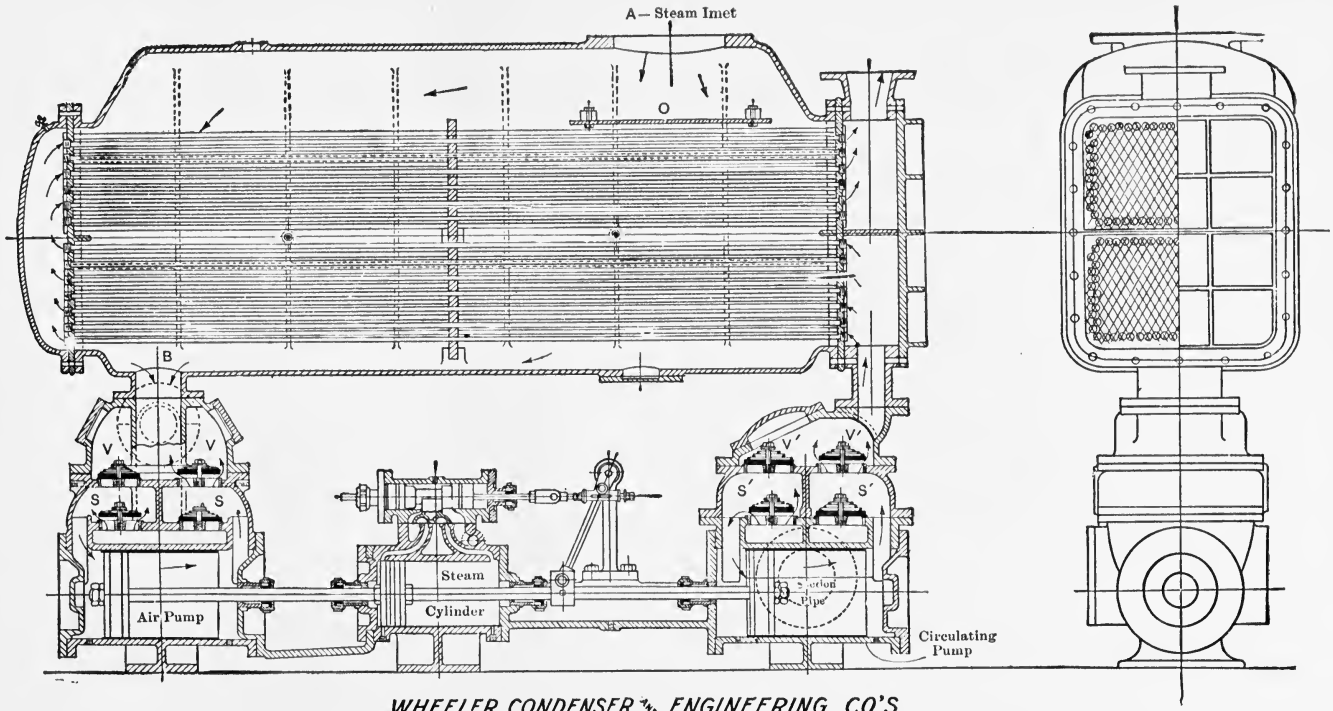
A — Steam Imet
O
B
V
V
S
S
V'
V'
S'
S'
Steam
Cylinder
Air Pump
Suction Pipe
Circulating Pump
WHEELER CONDENSER AND ENGINEERING CO'S
SURFACE CONDENSER MOUNTED ON COMBINED AIR AND CIRCULATING PUMP
DEC. 12, 04.

FIG. 16.

see that the valve S will remain open only so long as the pressure in the pump is less than the pressure in the condenser decreased by the pressure necessary to overcome the compression of the spring that tends to seat S. If there is not enough water to fill the pump, air and steam-vapor will fill the remaining volume above the water. On the return-stroke, S will close and valve V will open. The air will be forced past the open valve V and will be followed by such part of the water as is not required to fill the clearance-space that exists in the cylinder and passageway between the valve V and the piston when on the dead-center. From the chamber above V the air escapes into the atmosphere, and the water runs through a pipe (shown as a dotted circle) to the hot-well. The vertical pipe at B connects B and space S, but is closed to space V.

Circulating Pump.—On the right of the same figure is a cross-section of a circulating pump. It is evident that the cooling-tubes mentioned above would soon acquire the temperature of the entering steam if the heat is not absorbed by some other medium. The object of the circulating pump is to take water at some low temperature, as 60° to 90° F., and circulate it through the tubes in such manner that it will absorb the greatest amount of heat possible. It will be found that this can best be done by bringing the coolest water in contact with the coolest steam and the hottest water in contact with the hottest steam. In this case the circulating water passes through the pump in the direction of the arrows. It then passes through the lower nest of tubes in the direction of the arrows, the water-tight diaphragms determining the direction of flow. It circulates through the upper nest of tubes in a similar manner, and when it leaves the condenser it has a temperature of 110° to 130° F., each pound of water having absorbed some 50 or 40 B.T.U. (110 − 60 to 130 − 90), more or less. This circulating water is often called injection-water as it enters the condenser, and is called discharge-water as it leaves. The condensed steam is called feed-water, and the feed-pump is the one that is used to force it into the boiler. Hot feed-water must never be LIFTED by the pump, as the pump-chamber will fill with vapor on the suction-stroke, and the requisite pressure will not be obtained on the delivery-stroke to force the water into the boiler.

Jet Condenser.—Fig. 17 represents a jet condenser and its air-pump. This is an old form that is rather uneconomical of space, but it illustrates the principles clearly, which is important. The exhaust-steam enters the condenser by the pipe just above the water-jet. The injection water and steam come into actual contact and assume a common temperature. The air-pump in this case is vertical (which is desirable) and contains three large circular valves. These are made of hard rubber, are held fast in the

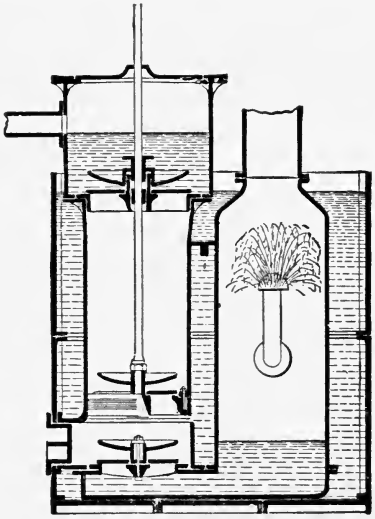

FIG. 17.

center, and are bent up in a saucer shape with an excess of pressure on the bottom side. The duty thrown on one valve should be distributed among several valves. The lowest is the foot-valve, the one in the piston is a bucket-valve, and the top one is the delivery-valve. Raising the piston reduces the pressure in the space between it and the foot-valve. If the condenser pressure is greater than this, the foot-valve rises and water and more or less air or vapor enters the air-pump. The air passes through the water so that when the piston descends the former passes first through the bucket-valves of the piston. The water passing through last serves to seal the valves and fill the clearance volume.

A small modern jet condenser is shown in Fig. 18.

The Bourdon Gage (Fig. 19).—This gage is used to indicate pressures. These are indicated on a marked dial by the movement of a hand. The latter receives its motion through a mechanism which multiplies the motion of the free end of a curved elastic metal tube of flattened or elliptical cross-section. The long axis of this section is *perpendicular* to the plane of the tube. The steam or gas is admitted at the fixed end into the interior of the elastic tube. As the pressure increases, the

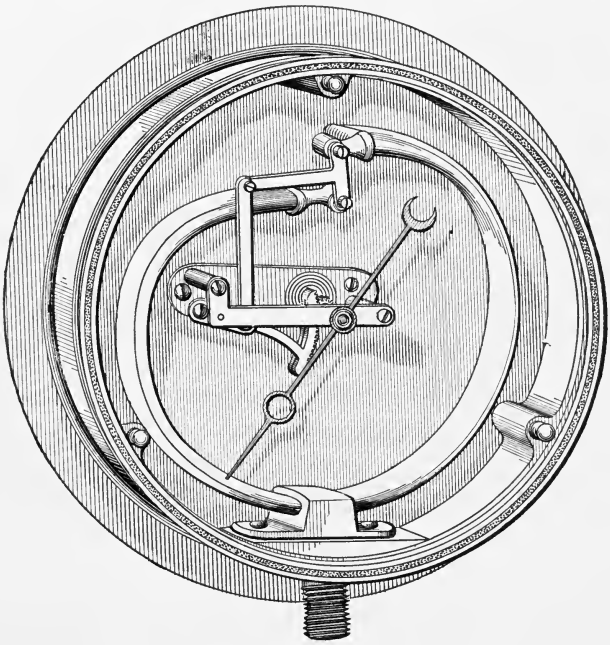

FIG. 19.—Double Spring Bourdon Gage.

elliptical section becomes more round. This tends to increase the inside arcs at right angles to the section, and as a consequence, the free end tends to move away from the fixed end.

To measure very heavy pressure in hydraulic work, the long axis is placed *parallel* to the plane of the tube or dial. The effect of increase of pressure is now to shorten the inner arcs and increase of pressure is followed by the movement of the free end toward the fixed end.

This gage may also be used to measure vacuum or the difference between the absolute pressure in some vessel and the

absolute pressure of the atmosphere. When so used it is usual to mark it in inches of mercury rather than in pounds.

Mercury Column.—Let Fig. 20 represent a U-tube, about 40 inches long, open at one end, *C*, to the atmosphere and connected to the condenser or other source of vacuum at *D*. Let it be filled with perfectly pure mercury—free from tin or other adulterations—to some level, *AB*, if the pressure at *D* and *C* are equal. If now the pressure is reduced in *D*, the mercury in the left leg will rise and it will fall in the right leg. At any instant, let the distance *EF* mark the difference of level.

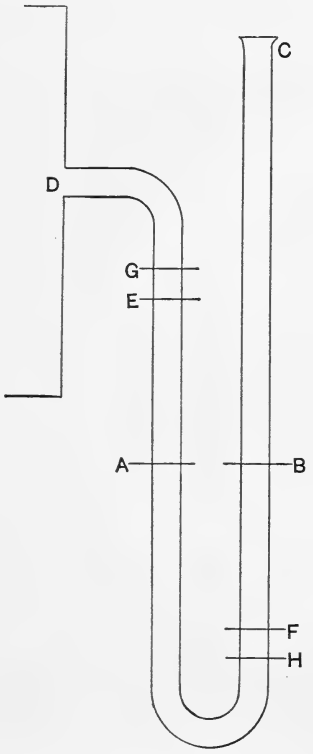

FIG. 20.

As the mercury is in equilibrium, the sum of the vertical forces must be zero, we have: The *pressure in the condenser in pounds per square inch + the weight of the column of mercury, EF, must equal the pressure of the atmosphere in pounds per square inch.*

Suppose the pressure in the condenser is reduced to absolute zero and the mercury rises to some point *G* then *HG* represents the weight of the atmosphere. Evidently then *GE + FH*, or twice *GE*, represents the *absolute pressure* in the condenser when the vacuum therein is not perfect. Now the height *HG*, at the sea-level, is ordinarily 30 inches of mercury, and the height *EF* is the quantity marked on all forms of vacuum gages. Hence, ordinarily 30 inches minus *EF* in inches is the absolute pressure in the condenser. To be exact, instead of 30 inches the height of the barometer in inches should be used. If, for instance, the barometer reading is 29.83 inches and the vacuum is 26.7 inches the absolute pressure in the condenser is $29.83 - 26.7 = 3.13$ inches.

If we call the atmospheric pressure 15 pounds per square inch and the barometer 30 inches, it is evident that 1 inch is equivalent to $\frac{1}{2}$ pound pressure, but more accurately, 1 inch equals 0.491 pound.

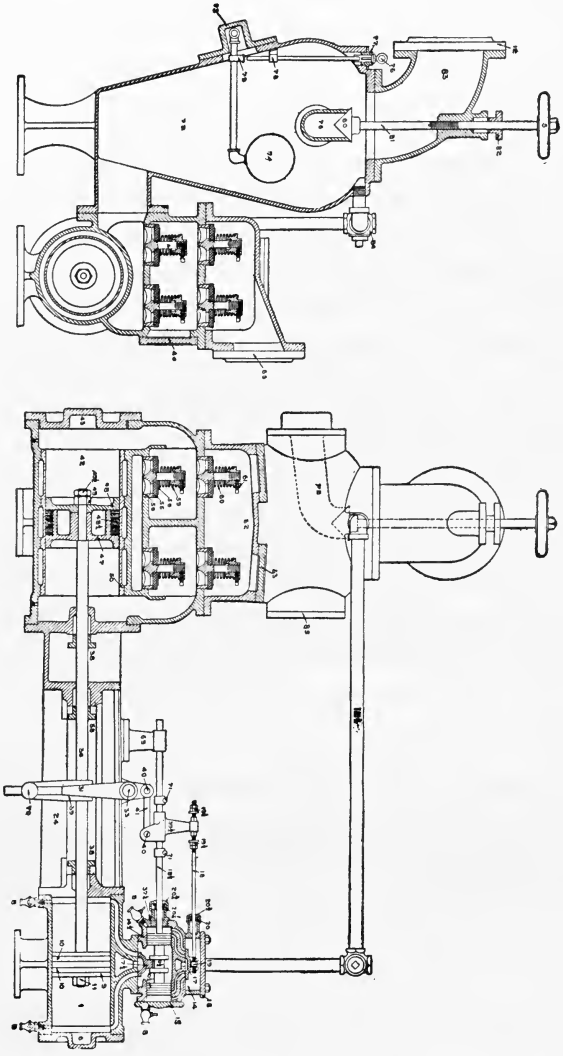

FIG. 18.—Combined Jet Condenser and Air-pump. (Buffalo Forge Company.)

Names of Parts.—It is desirable that the student learn, as soon as possible, the technical names of the different parts of the steam-engine, the steam-boiler, and the various auxiliaries and appliances of a steam-plant. He should recognize, know the use of, and make

fair sketches from memory of pistons, piston-rods, cross-heads, cross-head pins, cross-head slipper, cross-head guides, connecting-rods (both strap and club end), gib and key, crank-pin, crank-arm, crank, crank-pin brass, crank-pin journal, bearing, liner, cap-nuts, frame back-bone, holding-down bolts, cylinder-bonnets or covers, cylinder-heads, junk-ring, follower, springs, rings, boss of a wheel, eccentrics, eccentric-sheaves, eccentric-rods, stuffing-boxes, packing-glands, Stephenson link, dash-pot, reach-rod, parallel rod, saddle-plate, rocker, separator, steam-loop, steam-traps, sight-feed lubricator, indicator-cocks, reducing motion, steam-gage, vacuum-gage, receiver-gage, jack-shaft. He should trace the course of the steam from the boiler through the steam-pipes, the engine, the condenser, and the pumps back to the boiler. Engines and pumps must be taken apart that this may be done.

Rates versus Quantities.—It is important to distinguish between pressure and pressure per square inch. Pressure per square inch is a rate or an intensity. Pressure per square inch can never be pressure any more than velocity can be distance. Pressure per square inch multiplied by square inches gives pressure, just as velocity must be multiplied by time to give distance.

An expression for work is used which is so terse that much confusion results unless its factors are kept clearly in mind:

$$\text{Work} = PV,$$

where P = pressure per SQUARE FOOT;

V = volume, in CUBIC FEET, SWEPT THROUGH BY P.

Keep clearly in mind that $V = AL$, where A = area in square feet and L is distance in feet. Therefore PA = pounds and L = feet, so that

$$PAL = PV = \text{foot-pounds}.$$

Evidently the same result will be obtained if P is taken in pounds per square inch, if we take care to use A in square inches. In other words, P is now only 1/144th of its former value, but A is 144 times as large.

In steam-engine problems it is frequently convenient to use P in pounds per square inch. Evidently then, to obtain foot-pounds when P is in pounds per SQUARE INCH, we must take the area of the piston in SQUARE INCHES and the stroke in FEET.

Graphical Representation of Work.—As external work is the product of two factors, it may be represented by a closed area, as in Fig. 37. The ordinates represent pounds and the abscissas represent distance in feet. If the ordinates represent a rate or pressure in pounds per square inch, then the area of the piston in square inches is assumed as a constant multiplier. If the ordinates are laid off as pounds per square foot, the area of the piston in square feet is assumed.

Horse-power.—When work is done at the rate of 33,000 foot-pounds per minute, then that RATE is tersely, but arbitrarily, termed a horse-power. Hence if the total number of foot-pounds of work done by a machine per minute be divided by 33,000 the quotient is the rate of the machine in horse-power.

Indicated Horse-power.—The mean effective pressure that is exerted by the steam on the piston of a steam-engine may be found practically by means of an instrument called the steam-engine indicator, or it may be calculated from theory. For the present, we shall assume that we have the mean effective pressure per square inch. This multiplied by the area of the piston in square inches gives the total pressure. Multiplying the stroke in feet by the number of strokes per minute gives the distance through which, or over which, this pressure is exerted in a minute. The product of the total pressure and the total distance passed over per minute gives the foot-pounds per minute.

$$\text{I.H.P} = \frac{\text{foot-pounds of work per minute}}{33{,}000} = \frac{PLAN}{33{,}000},$$

where P = mean effective pressure per square inch;
L = length of stroke in feet;
A = area of piston in square inches;
N = 2 × revolutions per minute (strokes) for double-acting engines;
= 1 × revolutions per minute for single-acting engines;
= the number of impulses for gas-engines.

Ex. 8. Find the indicated horse-power of an engine having a cylinder 20 inches in diameter and a stroke of 48 inches; the mean effective pressure per square inch of piston area is 33 pounds; the number

of revolutions per minute is 50. The engine is double-acting. In practice this is expressed more tersely. The diameter of the cylinder is always the first dimension and the stroke is the second one. Thus the above may be written: Find the I.H.P. of a 20″×48″ engine; revs. 50; M.E.P.=33.

Ex. 9. Required the M.E.P. of a 12″×20″ engine of 50 I.H P.; revs. 100.

Ex. 10. Find the diameter and stroke of an engine to give 100 I.H.P. with a M.E.P. of 44 pounds, assuming the stroke to be 3/2 the diameter of the cylinder, the number of revolutions being 50 per minute.

The ordinary rating of a machine in horse-power should be the rate at which it is safe or economical to run it. Temporarily, engines may be made to develop power at greater rates than their normal ones, but in the end hot bearings, lack of economy, breakage, or other evil will probably arise. In some cases, however, it is economical to drive an engine to the limit of breakdown and buy a new one when necessary. In design, due regard must be paid to demands for power for short-time intervals. This is illustrated in the powerful motors required in street-car work.

Rates Equivalent to a Horse-power:

33,000 foot-pounds per minute.
550 foot-pounds per second.
1,980,000 foot-pounds per hour.
42.42 B.T.U. per minute.
2545 B.T.U. per hour.
746 watts or 746 volt-amperes.
1 kilowatt = 1000 watts = 1.3405 horse-power.

Brake Horse-power.—This term applies to the power delivered from the fly-wheel shaft of the engine. It is the power absorbed by a friction-brake applied to the rim of the wheel or to the shaft. A form of brake is preferred that is self-adjusting to a certain extent, so that it will of itself tend to maintain a constant resistance at the rim of the wheel.

"One of the simplest brakes for comparatively small engines which may be made to embody this principle consists of a cotton or hemp rope, or a number of ropes, encircling the wheel, arranged with weighing-scales or other means for showing the strain.

An ordinary band-brake may also be constructed so as to embody the principle. The wheels should be provided with interior flanges for holding water used for keeping the rim cool.

"A self-adjusting rope-brake is illustrated in Fig. 21, where it will be seen that, if the friction at the rim of the wheel increases, it will lift the weight, *A*, which action will diminish the tension at the end, *B*, of the rope, and thus prevent a further increase in the friction. The same device can be used for a band-brake of the ordinary construction. Where space below the wheel is lim-

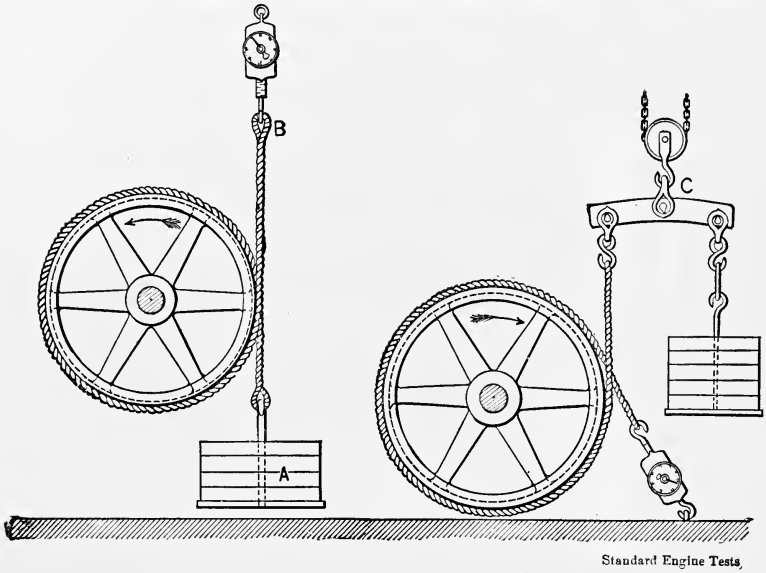

FIG. 21.—Rope-brake. FIG. 22.—Rope-brake.

ited, a cross-bar, *C*, supported by a chain-tackle exactly at its center-point may be used as shown in Fig. 10, thereby causing the action of the weight on the brake to be upward. A safety-stop should be used with either form to prevent the weights being accidentally raised more than a certain amount.

"The water-friction brake is specially adapted for high speeds and has the advantage of being self-cooling. The Alden brake is also self-cooling.

"A water-friction brake is shown in Fig. 23. It consists of two circular discs, *A* and *B*, attached to the shaft, *C*, and revolv-

ing in a case, *E*, between fixed planes. The space between the discs and planes is supplied with running water, which enters at *D* and escapes at the cocks, *F*, *G*, *H*. The friction of the water against the surfaces constitutes a resistance which absorbs the desired power, and the heat generated within is carried away by the water itself. The water is thrown outward by centrifugal action and fills the outer portion of the case. The greater the depth of the ring of water, the greater the amount of power absorbed. By suitably adjusting the amount of water entering and leaving, any desired power can be obtained. Water-friction

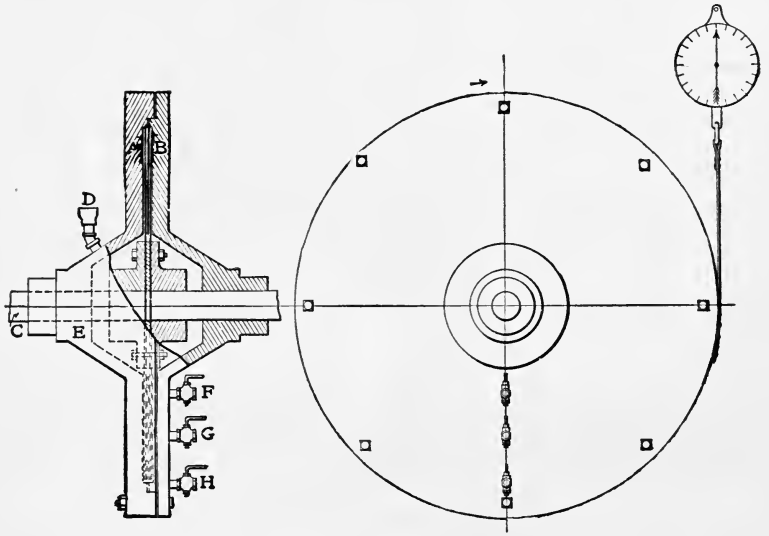

FIG. 23.—Alden Brake.

brakes have been used successfully at speeds of over 20,000 revolutions per minute."

Brake Horse-power.—The power that an engine can deliver is termed its brake horse-power, since it may be measured, when small in amount, by some form of brake-dynamometer (Fig. 21). The difference between the indicated and the brake horse-power is the friction horse-power. After an engine test, the load is thrown off the engine when possible and cards are taken. From these the power to run the engine with no load is determined. This power is evidently the friction horse-power, and by subtract-

ing it from the indicated horse-power the brake horse-power is determined.

The mechanical efficiency of the engine is $=\frac{\text{B.H.P.}}{\text{I.H.P.}}$.

As seen above, the minute is used as the unit of time in measuring the rating of an engine in horse-power. For some other purposes a minute is too small a unit for convenience. The consumption of water and coal per minute would be small decimals that would be awkward to use and difficult to remember. Hence the consumption per hour of those articles for each horse-power indicated by the engine is the unit adopted. Hence such an expression as "Consumption of coal per H.P.-hour $=2.1$ pounds" is to be interpreted "There were burnt on the grate of the furnace 2.1 pounds of coal per hour for each I.H.P." In other words, for N horse-power the total consumption of coal per hour would be $2.1N$ pounds.

Efficiency.—A crude definition of efficiency is

$$\frac{\text{What you get}}{\text{What you paid for it}}.$$

While it is not difficult to express the actual efficiency of a mechanism under certain circumstances, the theoretical efficiency can only be expressed under ideal conditions. For instance, the efficiency of a wood-turning machine might be very low at low speeds and very high at high speeds; its efficiency might be low when operated by an inexpert workman and high when operated for a short time by an expert.

Boiler Efficiency.—The efficiency may refer to the grate and boiler, or the grate, boiler, and economizer (if there is one). The efficiency is

$$\frac{\text{B.T.U. delivered by the boiler per hour}}{\text{Heat in the coal burnt per hour}}.$$

The heat delivered is measured from the temperature of the feed-water taken by a thermometer placed in the feed-pipe close to the boiler.

The heat in the coal may be found by calculation from a

chemical analysis of a sample of the coal, or a sample may be burnt in a coal calorimeter and its heat equivalent found.

If the percentage of carbon present in one pound of a sample = C
" " " " hydrogen " " " " " " =H
" " " " oxygen " " " " " " =O

the total B.T.U. in one pound of coal $=14{,}500C+62{,}000\left(H-\frac{O}{8}\right)$.

The maximum efficiency of a given boiler would only be secured when the coal in quality, fineness, thickness of bed, rate of burning was best suited to the kind of grate, furnace, and intensity of draft. The method of firing, the amount of air admitted, and other variables dependent on the skill of the fireman enter into the result.

To avoid these ambiguities the A. S. M. E. has adopted a standard boiler and a standard coal. The standard coal when burnt in a standard boiler is to give 12,500 B.T.U., of which the boiler is to deliver 10,000 B.T.U., having consequently an assumed efficiency of 80%.

Boiler Horse-power.—The capacity of a boiler to form steam is expressed in the following terms: Suppose water, at 212° F., is fed to a boiler and converted into steam at that same temperature, 212° F. A *boiler horse-power* is the *capacity* to evaporate 34½ pounds of water *per hour* from water at 212° F. into steam at 212° F. We shall find that it takes 966 thermal units per pound of water, so that to evaporate 34½ pounds of water requires $966\times34\frac{1}{2}=33{,}305$ B.T.U., or approximately 33,000 B.T.U.

This rate must not be confused with an engine horse-power. The latter is a rate in *foot-pounds* per *minute* but the former is a rate in *thermal units* per *hour*. They are not directly related. A 500-horse-power engine might require boilers of any power varying from 150 to 1000 boiler horse-power, depending on the thermal efficiency of the engine.

Rate of Evaporation.—Good water tubular boilers evaporate 8–10 pounds of water per pound of coal. Heating boilers below 20 horse-power evaporate 4–6 pounds of water per pound of coal. With the usual poor firing found in practice these results are frequently too high by one or two pounds of water.

Grate Area.—The grate area required may easily be found from the formula,

$$G=\frac{34.5\times \text{H.P.}}{E\times C}.$$

G = grate area in square feet;

E = pounds of water evaporated at 212° F. per pound of coal;

C = pounds of coal burned per square foot of grate area per hour.

It is usual to assume a combustion of 15 pounds of coal per square foot of grate with natural draft. It ranges from 10 or 12 for anthracite to 25 for gaseous bituminous coal.

AVERAGE STEAM CONSUMPTION OF ENGINES.

Type of Engine.	Pounds of Steam per I.H.P. per Hour.	
	Non-condensing.	Condensing.
Simple high speed	36–32	28–23
Simple medium speed	34–30	26–22
Simple Corliss	30–26	24–20
Compound high speed	26–24	22–18
Compound medium speed	28–23	22–17
Compound Corliss	26–22	20–16
Compound Corliss, over 500 I.H.P.	24–20	18–14

AVERAGE STEAM CONSUMPTION OF DUPLEX PUMPS.

Type of Pump.	Pounds of Steam per Hour per Delivered Horse-power.
Simple non-condensing	80–240
Compound non-condensing	65–75
Triple non-condensing	35–50
High duty non-condensing	28–34

The tables are arranged in the order of steam consumption, but the amounts given are for engines in *good* condition. If the valves or pistons leak the amounts given above may be exceeded by thirty to forty per cent. While the boiler supplies the above weights of steam per I.H.P. of the engine, each pound (*weight*) of the steam indicated above needs more heat than that required to convert one pound of water at 212° F. into steam at 212° F. This variable factor called the "*Factor of Evaporation*" depends upon the feed-water temperature and the boiler pressure. For the present, this factor may be assumed to be

1.2. To obtain the corresponding boiler power then it will be necessary to multiply the *total* steam consumption of the engine by 1.2 and the quantity so found should ordinarily be increased by 10 to 20% to allow for auxiliaries, future expansion and overloading the engine.

For example, what boiler horse-power would be required for an electric light plant containing 300 I.H.P. of high-speed compound engines?

If run non-condensing the engines would require

$$300 \times 28 = 8400 \text{ pounds of water per hour.}$$

The heat required to evaporate this water would be equal to that required to evaporate $8400 \times 1.2 = 10{,}080$ pounds of water from and at 212° F. Allow 15% of the last amount for auxiliaries and unforeseen emergencies and we have $10{,}080 \times 1.15 = 11{,}592$ pounds of water to be evaporated from and at 212° F., or

$$\frac{11{,}592}{34.5} = 337$$

as the necessary boiler horse-power.

The factor of evaporation may be obtained more accurately by substitution in the following equations.

Let F_e = factor of evaporation;

T_1 = temperature of the steam;

t_1 = temperature of the feed-water;

TH = total heat in thermal units to produce one pound weight of steam at temperature T_1 from feed-water at t_1.

$$TH = 1091.7 + .305(T - 32) - (t - 32)$$

$$F_e = \frac{TH}{966}.$$

Steam Consumption of Pumps.—The steam consumption of pumps is very great, and, in the case of pumps which are started and stopped at intervals, it is excessive through the condensation that occurs (during the quiescent intervals) in the steam-pipe leading to the pump. Allow 120 pounds per horse-power hour for boiler feed-pumps running at a practical constant rate; allow 200–300, for power actually used, if they are started and stopped frequently.

To obtain the work of the pump multiply the weight of water lifted by the vertical height in feet through which the water is lifted. This estimate must be increased by a percentage based on pump slippage, friction, and other losses. An ordinary allowance is 50%. In case the resistance is given in pounds pressure per square inch, as occurs when water is pumped into a boiler, divide the pressure in pounds per square inch by 0.4 and thus obtain the "head in feet."

Electric Lighting.—Direct-current arcs usually use 10 amperes at 42 to 52 volts, the most satisfactory light being at 46 to 47 volts.

Enclosed Arcs.—Direct-current enclosed arcs consume about 5 amperes at 80 volts or 400 watts. Alternating enclosed arcs usually take a current of 6 amperes at 70 or 75 volts.

The power required for electric lighting may be determined by assuming that one horse-power, at the lamps, is consumed by the number of lamps given below.

NUMBER OF TYPE OF LAMPS SUPPLIED BY ONE HORSE-POWER.

Number of Lamps.	Type and Power of the Lamp.
12	16 candle-power incandescent
6	32 candle-power incandescent
2.2	Half-arc open
1.5	Full arc open
1 to 1.5	Closed arc

Assume the mechanical efficiency of the engine as 90%, the efficiency of the generator as 90%, and the line efficiency when the lamps are in or near the building as 90%; we have a total efficiency of 73% between the engine and the lamps. From these data the boiler horse-power may be determined.

Example.—What boiler horse-power will be required to furnish steam to high-speed compound non-condensing engines, using 28 pounds of water per I.H.P., which drive generators for the following lights: 2000 16 c.p. incandescents, 1000 32 c.p. incandescents, and 50 A.C. closed arcs.

$$2000 \div 12 = 167$$
$$1000 \div 6 = 167$$
$$50 \div 1 = 50$$
$$384$$

LIBRARY OF THE UNIVERSITY

Dividing 384 electrical horse-power at the lamps by 0.73 we obtain 525 I.H.P. for the engines.

Required the pump displacement per minute and the boiler horse-power to operate the feed-pumps for 300 I.H.P. of high-speed compound engines. Water lifted 5 feet, boiler pressure, 160 pounds.

If run non-condensing, the actual requirements are $300\times28=8400$ pounds of water per hour. The theoretical displacement should be twice this amount to allow for slippage, inefficiency of pump and emergencies. Pump displacement per minute should be

$$\frac{8400\times2}{60\times62.5}=4.5 \text{ cu. ft.}$$

The delivered horse-power will be $\dfrac{\left(\dfrac{160}{.4}+5\right)\dfrac{8400}{60}}{33{,}000}=1.7.$

The actual horse-power may be $1.7\times1.5=2.5$.

Assume a water consumption of 100 pounds per horse-power and it is evident that the boiler must evaporate 250 pounds of water per hour for the pump. Assume a factor of evaporation of 1.2 and the boiler horse-power required will be

$$\frac{250\times1.2}{34.5}=8.7.$$

The steam needed by the engines is $525\times28=14{,}700$ pounds. With a factor of evaporation of 1.2 we have

$$\frac{14{,}700\times1.2}{34.5}=510$$

as the boiler horse-power required.

Combining Efficiencies.—If one pound of coal contains 14,000 B.T.U. and the efficiency of the boiler is 75%, what percentage of the heat liberated in the furnace of the boiler appears as energy at the lights? Assume 28 pounds as the water rate of the engine.

The engine receives $28\times966\times1.2=32{,}457$ B.T.U. from the boiler per hour and utilizes $\frac{33{,}000\times60}{778}=2545$ B.T.U.

Thermal efficiency of the engine is $\frac{2545}{32{,}457}=7.8\%$. The combined efficiency is then $.75\times.078\times.90\times.90\times.90=.04$. Hence $14{,}000\times.04=560$ B.T.U. is consumed at the light.

Heat Consumption of a Steam-engine Plant.*—"The heat consumption of a steam-engine plant is ascertained by measuring the quantity of steam consumed by the plant, calculating the total heat of the entire quantity and crediting this total with that portion of the heat rejected by the plant which is utilized and returned to the boiler. The term engine-plant as here used should include the entire equipment of the steam-plant which is concerned in the production of the power, embracing the main cylinder or cylinders, the jackets and reheaters, the air, circulating and boiler-feed pumps if steam-driven, and any other steam-driven mechanism or auxiliaries necessary to the working of the engine. It is obligatory to thus charge the engine with the steam used by necessary auxiliaries in determining the plant economy, for the reason that it is itself finally benefited, or should be so benefited, by the heat which they return, it being generally agreed that exhaust steam from such auxiliaries should be passed through a feed-water heater and the heat thereby carried back to the boiler and saved. The indicated horse-power is that determined by steam-engine indicators. It should be confined to the power developed in the main cylinder or cylinders.

"The temperature of the feed-water is the actual temperature under working conditions and should be taken near the boiler.

"The heat consumption of gas- and oil-engines of the internal-combustion class is found by ascertaining the total heat of combustion of the particular fuel used, which should be determined by a calorimeter test, and multiplying the result by the quantity of fuel consumed. In determining the total heat of combustion, no deduction is made for the latent heat of the water-vapor in the products of combustion.

---

* See Trans. A. S. M. E., Vol. XXIV. Standard Rules.

"The indicated horse-power should be confined to the power developed in the main cylinder or cylinders, and should not include that developed in the cylinders of auxiliaries.

"The thermal efficiency is expressed by the fraction

$$\frac{2545}{\text{B.T.U. per H.P. per hour}}."$$

The heat-unit expression of economy does not in itself show whether the engine is working to its best advantage any more than the expression of the steam consumption, since the *temperature* at which the heat is supplied is a very important factor in determining the efficiency of engines, as there is only a limited choice in the temperature at which the heat is rejected. The highest possible efficiency being measured by $\frac{T_a - T_b}{T_a}$, where T_a is the absolute temperature of the steam entering the engine and T_b is the absolute temperature of the condenser.

Ex. 11. If the net or brake horse-power of an engine is 92% of the I.H.P. and the electrical horse-power is 94% of the brake horse-power, find the I.H.P. of an engine to give 750 kilowatts.

Ex. 12. If the above efficiencies are assumed, find the coal required per kilowatt-hour if 2 pounds are required per hour per I.H.P.

Ex. 13. If the heat received by each pound of steam from the boiler is 1100 B.T.U., and the engine utilizes only 10% of this in work as shown by the indicator-card, how many pounds of water per hour must be pumped into the boiler per I.H.P.?

A graphical illustration of the answer to the question "What becomes of the heat-units?" is given in Fig. 24 for an exceptionally economical engine.

Of the 186,600 B.T.U. generated by burning coal on the grate there is a loss of 10,000 units by radiation from the boiler; the remainder divides into two streams. About 70% is absorbed by the boiler and the rest passes through an economizer on its way to the chimney. The feed-water contains 5450 units when it reaches the economizer, and there it absorbs 15,750 more units that otherwise would have been wasted. The heated feed-water receives the hot water from the jackets and delivers (after losing some heat by radiation) some 27,650 units to the boiler. A total then of 159,250 units have been saved, and with small loss are

delivered to the engine. Here the losses are very great, only 25,390 units being delivered by the engine. As this result is obtained in a record-breaking engine, the amount delivered in an

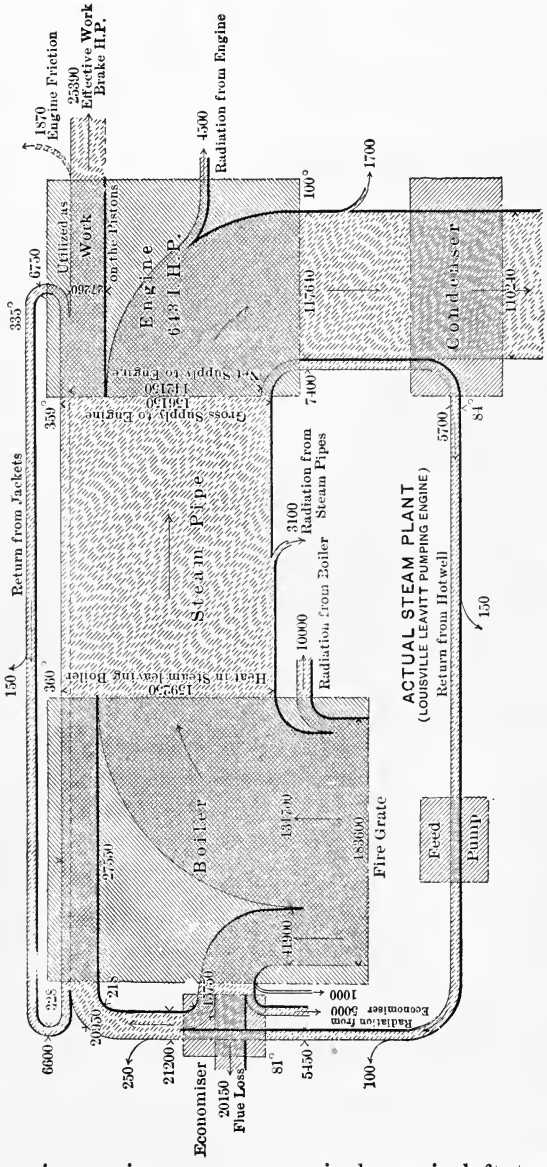

Fig. 24.

ordinary engine or in an uneconomical one is left to the reader. It is the province of this book to discuss the laws that govern the saving and the wasting of heat in the steam-engine and other heat-engines.

In Fig. 25 we have a similar diagram for an ideal plant, showing that 104,200 B.T.U. only are necessary to do the same work in a purely theoretical engine working between the same tempera-

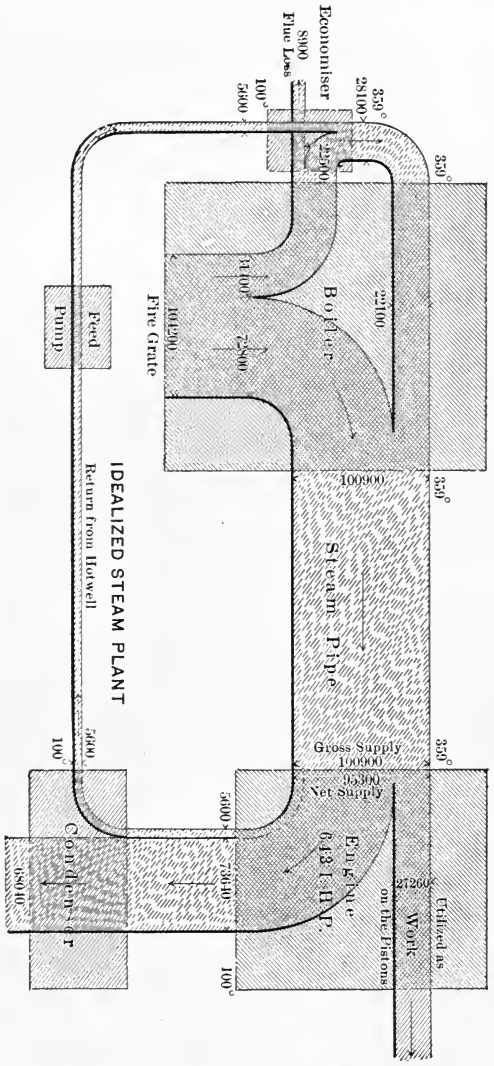

Fig. 25.

ture limits. The ideal efficiency may be approached but never will be reached by any practical engine.

The names of engines indicate:

Their use: Marine, rolling-mill, agricultural, electric-light, saw-mill, donkey, switch.

The number of revolutions: High, medium, slow-speed.
Character of steam expansion: Simple, compound, triple-expansion.
Treatment of the exhaust: Condensing or non-condensing.
Position of the cylinders: Horizontal, vertical, inclined, direct-acting, inverted.
Number of sides of piston acted upon by the steam: Single-, double-acting.
Character of the valve-gear: Corliss, gridiron, plain-slide, double-poppet, Marshall, piston-valve.
Character of the cut-off gear: Meyer, Buckeye, Corliss, automatic, adjustable, variable.
Kind of governor: Throttle, fly-ball, fly-wheel, or shaft inertia.
Position of valve-gear with reference to the cylinder and shaft: Right-hand, left-hand engine.
Direction of rotation: Running over, running under.
Movability: Stationary, portable, marine, steamboat, dredge.
Connection to the crank-pin: Overhung, tandem, cross-compound.
Reversibility: Link, shifting eccentric.
Enclosing of the moving parts: Enclosed engines.
Concentration on one base-plate: Self-contained engines.

Ex. 14. What I.H.P. will be required to raise 100,000,000 gallons of water per day through a height of 40′ if the combined efficiency of engine and pump is 50%?

Ex. 15. If the total B.T.U. in one pound of coal is 14,500, what is the combined efficiency of an engine and boiler if 200 pounds of coal are burnt per hour in the furnace of the boiler to run a 100-I.H.P. engine.

Ex. 16. One pound of coal contains .88 pound of carbon, .03 pound of hydrogen, .04 pound of oxygen; the remainder is ash. 30% of the heat generated is lost in the chimney gases. How many B.T.U. are absorbed per hour if 200 pounds of coal are burnt per hour?

Ex. 17. If the work (expressed in B.T.U.) done by an engine, as shown by the indicator-card, is 8% of the heat that was given to the steam in the boiler and it is known that the boiler only absorbs 70% of the heat that is in the coal, find the number of pounds of coal that are required per hour per I.H.P.

CHAPTER II.

STEAM-ENGINE INDICATOR AND ITS CALIBRATION.

Steam-engine Indicator.—The steam-engine indicator has but one fundamental requirement, namely, to give a graphical record of the steam or other gaseous pressure that existed on either side of a piston of an engine for any or all positions of that piston. Two quantities must be absolutely exact—the measure of the steam pressure and the measure of the contemporaneous position of the piston. Some of the numerous sources of error will be pointed out later. Fig. 26 illustrates a cross-section of the Crosby indicator. Steam from one side of the engine-piston is admitted through 6 to the piston, 8, whose movement, resisted by the pressure of the atmosphere and the compression of the spring surrounding 10, is communicated to a parallel motion which causes a pencil, secured at 23 in the pencil-bar, 16, to move in a straight line parallel to one of the elements of the paper-drum, 24. If a paper is fastened to the drum by the two clips, shown broken above 25, and the pencil at 23 is pressed against the paper, then by rotating the drum, when piston 8 is exposed on both sides to the atmosphere, a reference-line, called the atmospheric line, will be drawn. Suppose steam, whose pressure is 40 pounds above the atmosphere, is admitted below piston 8. If the stiffness of the spring is such that it compresses 1/5″ and this movement is multiplied five times by the lever, 16, then 23 would rise 1 inch above the atmospheric line, hence for measurements on the diagram on the drum the scale of the spring would be 40 pounds = 1″. If now the drum be rotated, a line parallel to the atmospheric line previously drawn will be made if the pressure on piston, 8, remains constant. If the pressure varies, then the pencil-point will either rise or fall and a curved line will be made on the paper. If,

however, any point on this curve be taken, its height above the atmospheric line represents the gage pressure of the steam on piston 8, and its abscissa represents the amount that the drum was rotated from its initial position.

The record made by an indicator takes the form of a closed figure called a card or diagram. The length of a card does not exceed 3″ or 4″, and, in high-speed engines, it is better not to exceed 2″ or 3″. The height of the card should not exceed 2″, and in high-speed work a height of 1½″ is plenty. We have seen the significance of the vertical movement of the pencil, and there remains only the horizontal movement of the paper caused by the rotation of the drum. Suppose the stroke of an engine is 12″ and we want a card 3″ long, the reduction of the motion of the engine-piston is then 1/4. If the ends of the atmospheric line correspond to the dead-center positions of the engine-piston, then, for each 1/4″ that the drum moves from its initial position when the pencil is at the end of the atmospheric line, the piston of the engine should move 1″ exactly from the corresponding dead-center.

* "Part 4 is the cylinder proper, in which the movement of the piston takes place. It is made of a special alloy, exactly suited to the varying temperatures to which it is subjected, and secures to the piston the same freedom of movement with high-pressure steam as with low; and, as its bottom end is free and out of contact with all other parts, its longitudinal expansion or contraction is unimpeded and no distortion can possibly take place. Between the parts 4 and 5 is an annular chamber, which serves as a steam-jacket, and being open at the bottom can hold no water, but will always be filled with steam of nearly the same temperature as that in the cylinder."

In the above paragraph many desiderata are pointed out, but no real evidence or data are given to prove the assertions beyond the evidence of the cut. Catalogues give much valuable information, but students should be trained to give only the proper value to the statements they contain for obvious reasons.

"The piston, 8, is formed from a solid piece of the finest tool-

---

* Quoted from Practical Instruction for Using the Steam-engine Indicator, Crosby Steam-gage and Valve Co.

steel. Its shell is made as thin as possible consistent with proper strength. It is hardened to prevent any reduction of its area by wearing, then ground and lapped to fit (to the ten-thousandth part of an inch) a cylindrical gage of standard size. Shallow channels in its outer surface provide a steam-packing, and the moisture and oil which they retain act as lubricants and prevent

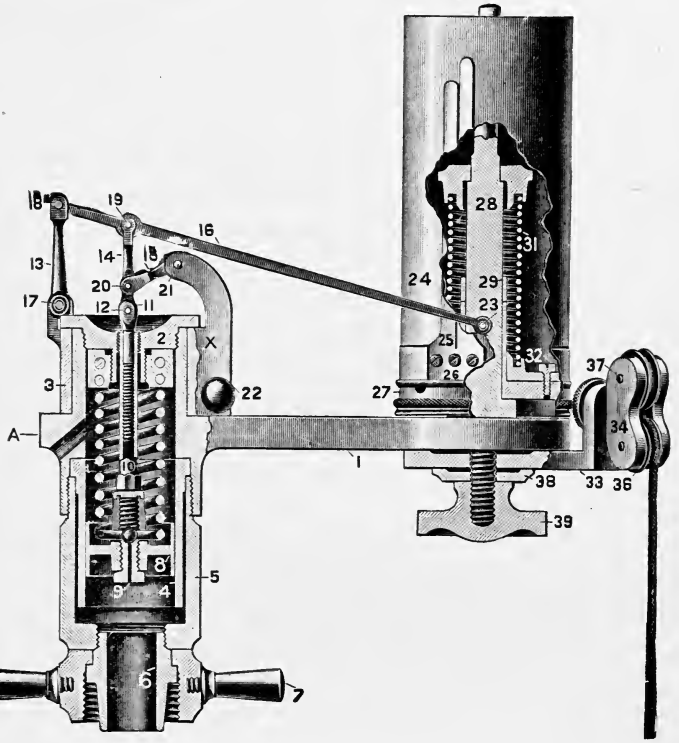

FIG 26. - Crosby Indicator—Cross-section.

undue leakage by the piston. The transverse web near its center supports a central socket, which projects both upward and downward; the upper part is threaded inside to receive the lower end of the piston-rod; the upper edge of this socket is formed to fit nicely into a circular channel in the under side of the shoulder of the piston-rod when they are properly connected. It has a longitudinal slot which permits the straight portion of the wire at the bottom of the spring, with its bead, to drop to a concave bearing in the upper end of the piston-screw, 9, which is closely threaded into the lower

part of the socket; the head of this screw is hexagonal and may be turned with the hollow wrench which accompanies the indicator."

The above paragraph gives some idea of the care used in the design of the piston. The moving parts of an indicator should

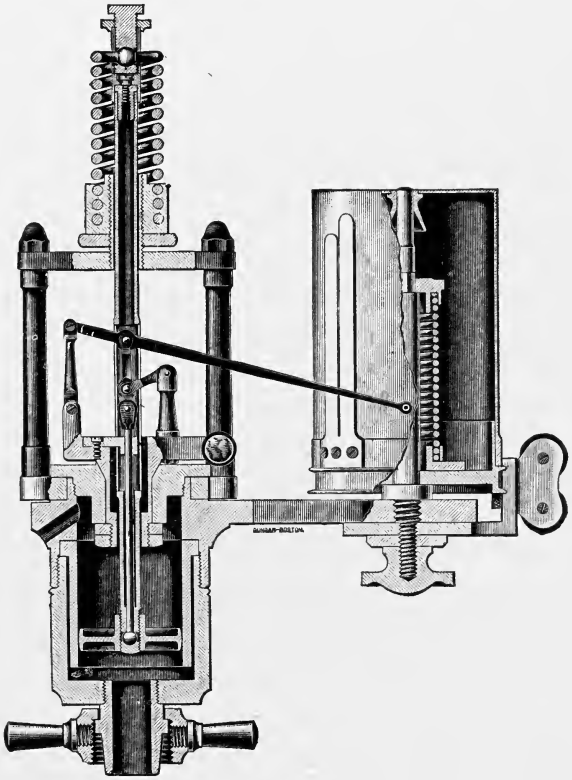

FIG. 27.—Crosby Indicator—Outside Spring.

be theoretically without weight (on account of inertia stresses), and should be frictionless. With the advent of superheated steam and the use of outside springs, this firm changed the shape and size of the indicator-piston. For, they say (Fig. 27), "the other and more important difference lies in the shape and size of the piston. This piston is 1 square inch in area and is in form the central zone of a sphere, thus affording great active force with a very light pencil mechanism. In other words, this piston serves as a universal joint to take care of the torsional strains of the spring when it operates the pencil mechanism of the indicator.

"The *Piston-rod,* 10, is of steel and is made hollow for lightness. Its lower end is threaded to screw into the upper socket of the piston. Above the threaded portion is a shoulder having in its under side a circular channel formed to receive the upper edge of the socket when these parts are connected together. When making this connection BE SURE that the piston-rod is screwed into the socket as far as it will go, that is; until the upper edge of the socket is brought firmly against the bottom of the channel in the piston-rod. This is very important, as it insures a correct alignment of the parts and a free movement of the piston within the cylinder.

"The *Swivel-head,* 11, is threaded on its lower half to screw into the piston-rod more or less, according to the required height of the atmospheric line on the diagram. Its head is pivoted to the piston-rod link of the pencil mechanism.

"The *Cap,* 2, rests on top of the cylinder and holds the sleeve and all connected parts in place. It has a central depression in its upper surface, also a central hole, furnished with a hardened-steel bushing, which serves as a very durable and sure guide to the piston-rod. It projects downward into the cylinder in two steps having different lengths and diameters; both these and the hole have a common center. The lower and smaller projection is screw-threaded outside to engage with the like threads in the head of the spring and hold it firmly in place. The upper and larger projection is screw-threaded on its lower half to engage with the light threads inside the cylinder; the upper half of this larger projection, being smooth vertical portion, is accurately fitted into a corresponding recess in the top of the cylinder, and forms thereby a guide by which all the moving parts are adjusted and kept in correct alignment, which is very important, but which is impossible to secure by the use of screw-threads alone.

"The *Sleeve,* 3, surrounds the upper part of the cylinder in a recess formed for that purpose and supports the pencil mechanism; the arm, *X,* is an integral part of it. It turns around freely and is held in place by the cap.

"The *Pencil Mechanism* is designed to afford sufficient strength and steadiness of movement with the utmost lightness, thereby eliminating as far as possible the effect of momentum, which is especially troublesome in high-speed work. Its fundamental kine-

matic principle is that of the pantograph. The fulcrum of the mechanism as a whole, the point attached to the piston-rod, and the pencil-point are always in a straight line. This gives to the pencil-point a movement exactly parallel with that of the piston. The movement of the spring throughout its range bears a constant ratio to the force applied and the amount of this movement is multiplied six times at the pencil-point. The pencil-lever, links, and pins are all made of a hardened steel; the latter, slightly tapering, are ground and lapped to fit accurately, without perceptible friction or lost motion.

"The *Piston-spring* is of unique and ingenious design, being made of a single piece of the finest steel wire, wound from the middle into a double coil, the spiral ends of which are screwed into a brass head having four radial wings with spirally drilled holes to receive and hold them securely in place. Adjustment is made by screwing them into the head more or less until exactly the right strength of spring is obtained, when they are there firmly fixed. This method of fastening and adjusting removes all danger of loosening coils, and obviates all necessity for grinding the wire, a practice fatal to accuracy in indicator-springs.

"The *Foot of the Spring*,—in which lightness is of great importance, it being the part subject to the greatest movement,—is a small steel bead firmly 'staked' on to the wire. This takes the place of the heavy brass foot used in other indicators, and reduces the inertia and momentum at this point to a minimum, whereby a great improvement is effected. This bead has its bearing in the center of the piston, and in connection with the lower end of the piston-rod and the upper end of the piston-screw, 9 (both of which are concaved to fit it), forms a ball-and-socket joint which allows the spring to yield to pressure from any direction without causing the piston to bind in the cylinder, which is sure to occur when the spring and piston are rigidly united, as is the case in other indicators. Designing the spring so that any lateral movement that it may receive when compressed shall not be communicated to the piston and cause errors in the diagram is of extreme importance.

"The *Drum-spring*, 31, in the Crosby indicator (Fig. 27) is a short spiral, while in every other make a long volute-spring is used.

"It is obvious from the large contact surfaces of a long volute-

spring that its friction would be greater than that of a short open spiral form; also, that in a spring of each kind, for a given amount of compression,—as in the movement of an indicator-drum,—the recoil would be greater and expended more quickly in the spiral than in the volute form.

"If the conditions under which the drum-spring operates be considered, it will readily be seen that at the beginning of the stroke, when the cord has all the resistance of the drum and spring to overcome, the spring should offer less resistance than at any other time; in the beginning of the stroke in the opposite direction, however, when the spring has to overcome the inertia and friction of the drum, its energy of recoil should be the greatest."

Indicator-springs.—Springs are made to the following scales: 4, 8, 12, 16, 20, 30, 40, 50, 60, 80, 100, 120, 150, 180. The spring to be used is determined by the fact that the height of the diagram should not exceed $1\frac{3}{4}$".

* **Tabor Indicator.**—Fig. 28 illustrates the method of making a pencil-point describe a straight line when the pencil is attached

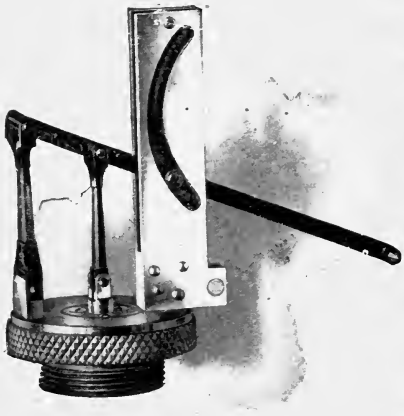

FIG. 28.

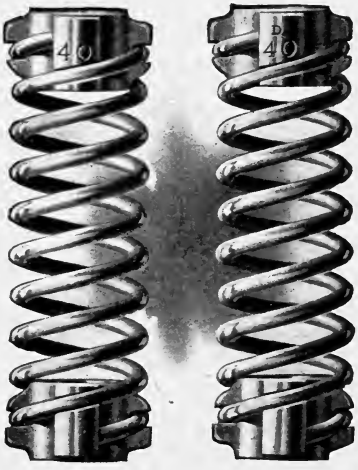

FIG. 29.

to a lever that tends to describe a circular arc. "A stationary plate in which is a curved slot is firmly secured in an upright position to the cover of the steam-cylinder (or on the outside spring-indicator to a bracket on the steam-cylinder). On the pencil-bar

* Quotations from "The Tabor Indicator."

is a roller-bearing which is secured to the bar by a pin. This roller moves freely in the curved slot in the guide upright and controls the motion of the pencil-bar. The position of the slot and guide upright is so adjusted and the guide-roller is so placed on the pencil-bar that the curve of the guide slot controls the pencil motion and absolutely compensates the tendency of the pencil to move in a curve."

"The springs used on the Tabor indicators are of the duplex type, made of two coils of wire fastened exactly opposite to each other on the bases. This arrangement equalizes the side strain on the spring and keeps the piston central in the cylinder, avoiding the excessive friction caused with a single coil spring forcing the piston unequally against the side of the cylinder." The springs for inside and outside use necessarily differ, due to the differences of temperature to which they are exposed. Those intended for outside springs are marked *D*, as in Fig. 29; the inside springs are unlettered. The table gives the safe pressures for springs of different strength.

Scale of Springs.	Maximum Safe Pressures to which springs can be subjected.	
	Pounds Pressure per Square Inch with ½ Square Inch Area Piston.	
	To 200 Revolutions.	To 300 Revolutions.
8	10	6
10	15	10
12	20	15
16	28	22
20	40	32
24	48	40
30	70	58
32	75	62
40	95	80
48	112	95
50	120	100
60	140	115
64	152	125
80	180	145
100	200	160
120	240	195
150	290	250
200	375	330

Fig. 30 represents a Tabor indicator with outside spring. The motion of the indicator-piston, which is in the steam-cylinder

below the spring, is given to the parallel motion shown in front of the spring. The indicator-card paper is held on the paper-cylinder by the two clips shown at the end of the pencil-bar. Motion is given to the drum by a Houghtaling reducing motion.

It is well known that a worm and worm-wheel afford a simple means of securing a large reduction in the velocity ratio between two shafts at right angles to one another, since one complete revolution of the worm causes the worm-wheel to rotate through an angle measured by the pitch of one tooth. It is also well known that it is desirable to stop the motion of the paper-drum to change indicator-card papers without disconnecting the cord that gives motion to the paper-drum.

In the Houghtaling reducing motion, the forward motion of the cross-head of the engine is conveyed through a cord to a detachable pulley whose diameter is about 1/12 the stroke of the engine. The motion of this pulley is given to its shaft only on closing the clutch shown to the left of the pulley. A worm turned on the shaft gears with a worm-wheel attached to the paper-drum. The rotation of this drum during the forward engine-stroke winds a volute-spring. The unwinding of this spring on the return-stroke furnishes the power to rotate the drum.

In setting the valves of an engine it is very desirable to take cards from each end of each cylinder during the same revolution of the engine. This may be done by the use of an electrical attachment to the indicator. Essentially it consists of an electro-magnet that draws the pencil to the paper during the passage of an electric current through the magnet and withdraws the pencil when the current is broken.

"In cases where diagrams are to be taken simultaneously, the best plan is to have an operator stationed at each indicator. This is desirable, even where an electric or other device is employed to operate all the instruments at once; for unless there are enough operators, it is necessary to open the indicator-cocks some time before taking the diagrams and run the risk of clogging the pistons and heating the high-pressure springs above the ordinary working temperature." †

† See Trans. A. S. M. E. Standard Rules.

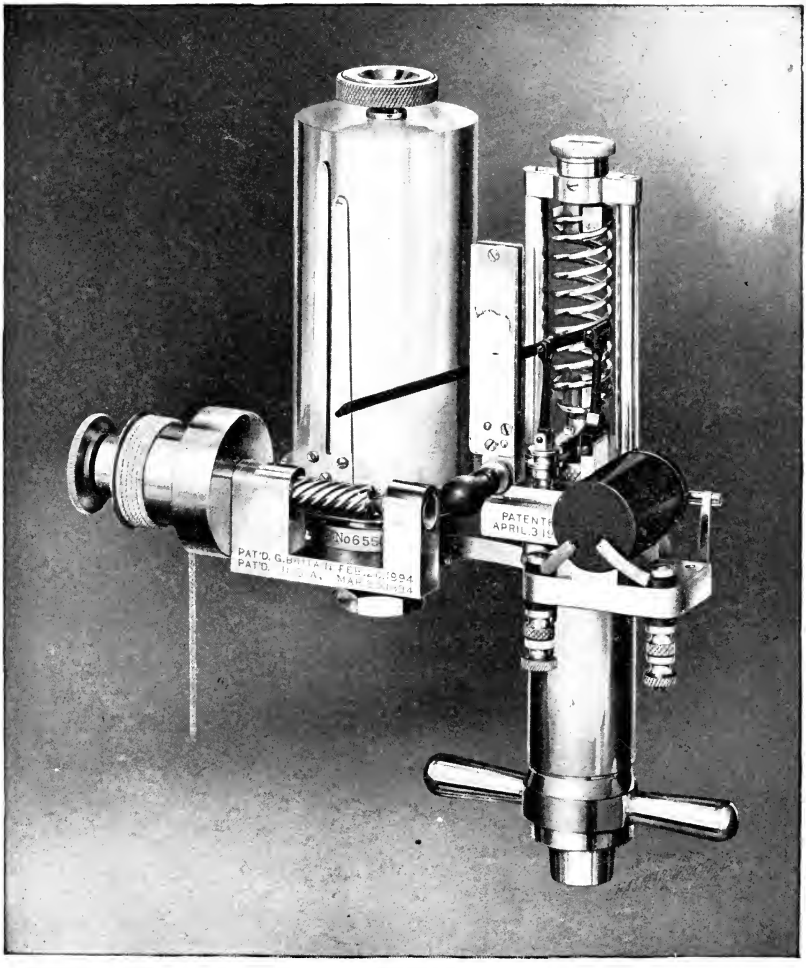

FIG. 16.

Dimensions of Standard Tabor Indicator.—Diameter of piston, 0.7978 inch; stroke of drum, 5.5 inches; range of pencil motion, 3.25 inches; diameter of drum, 2.063 inches; height of drum, 4 inches; ratio of multiplication of piston motion, 5 for 1.

Dimensions of Small Drum-indicator.—Diameter of piston, 0.7978 inch; stroke of drum, 4 inches; range of pencil motion, 2.35 inches; diameter of drum, 1.5 inches; height of drum, 2.875 inches; ratio of multiplication of piston motion, 5 for 1.

Attachment of the Indicator.—For accurate work the indicator connections should be short and direct, especially in high-speed engines. The indicator may be used at any angle, but the vertical position is generally preferable. The usual plan is to bore a hole in the side of the cylinder so as to pierce the bore in the clearance space out of the currents of steam and beyond the piston when on the dead-center. After tapping these holes for 1/2″ pipe, a short quarter-bend of that size, threaded at each end, is screwed into these holes. A bushing and a straight-way cock—which generally only fits one style of indicator—complete the connection.

When drilling holes, it is necessary either to take off the cylinder-heads to remove the metal chips or to carry a low steam pressure that will blow the chips towards the driller. No red or white lead should be used, as particles of it may get into the indicator and injure it.

Before drilling the holes the following should be considered:

1. The relation of the holes to the piston and ports.

2. The position, method of fastening, and accessibility of the reducing motion.

3. The convenience of the operator in taking cards.

"The use of a three-way cock and a single indicator connected to the two ends of the cylinder is not advised, except in cases where it is impracticable to use an indicator close to each end. If a three-way cock is used the error produced should be determined and allowed for. The effect of the error produced by a three-way cock is usually to increase the area of the diagram. This is due to the tardiness of the indicator in responding to the changes of pressure. In an investigation made by one of the committee, which was carried out both on short-

stroke engines running at high speed and long-stroke engines running at comparative slow speed, it was found that the increased area of the diagram, due to the sluggish action produced by the three-way cock, ranged from 3 to 7 per cent as compared with an indicator with a short and direct pipe." †

Drum Motion.—The motion of the paper-drum may be derived from the cross-head or any other part of the engine whose motion coincides with that of the piston. Various devices have been invented to reduce the cross-head motion to that required by the drum. In most of them a cord is used. This cord should not stretch appreciably under the stress to which it is subjected and it should always maintain the same path. It should not, for instance, radiate in different lines from a point at different positions of the cross-head.

Reducing-lever. — Before the introduction of the portable forms of reducing motions, consulting engineers had frequently to devise a reducing motion on the premises visited. A common form of the reducing-lever is shown in Fig. 31. The support for the pivot on the top has been omitted. In some cases the ceiling over the engine afforded the necessary base; in other cases a substantial frame had to be erected. As rigidity is more important than strength alone it is well to take a straight-grained piece of wood, planed on both sides, 1″ thick, some 3″ wide at the top and 2″ wide at the bottom. It should swing without vibration in a vertical plane parallel to the guides of the engine. The top pivot should be vertically over the middle of the bottom stud when the latter is in its midposition. To maintain a constant length of lever-arm, the lever must carry a fixed stud (Fig. 31*a*) at the bottom and the necessary lost motion vertically will take place in a slotted plate carried by the cross-head. This stud should be at the top of the slot on both ends of the stroke. The length of the lever is the distance between the centers of the pivot and stud and this should be at least 1.5 times the stroke.

It is evident that if the cross-head carried a stud and drove the lever, the connection therein being slotted, the radius of the lever would be variable. The cord connection shown is inaccu-

† See Trans. A. S. M. E. Standard Rules.

rate and a better one is shown in Fig. 32. The sector compels the cord to keep always in the same path.

The Brumbo pulley (Fig. 32) is another form of the reducing lever that is frequently used in locomotive tests. The rim of the

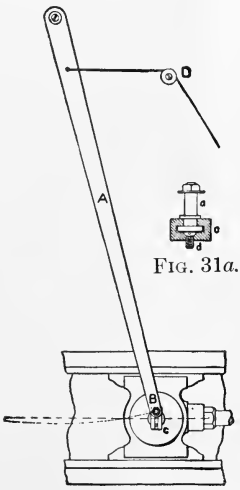

Fig. 31.

Fig. 31*a*.

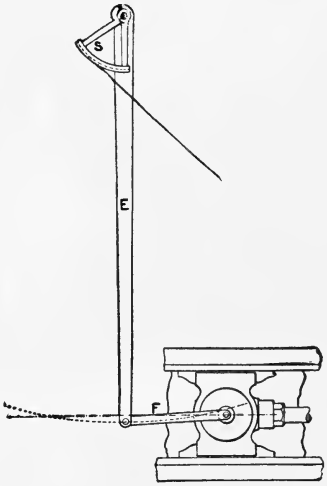

Fig. 32.

sector is grooved to receive the cord that connects with the indicator-drum. The lever and sector have a common pivot. The driving-link is from one-quarter to one-half of the length of the lever-arm. The latter should be vertical in midposition and the driving-pin in this position should be below the line of motion of the cross-head one-half the versine of one-half the arc of oscillation of the lever. In other words, the driving-stud in midposition is as much below the line of motion of the cross-head in midposition as it is above it on the two ends of the stroke.

Reducing-wheels. — Figs. 30 and 33 show different designs of reducing-wheels. When properly made and handled they give accurate results. They can be tested by moving the piston inch by inch, being careful to take up all lost motion and measuring the corresponding rotation of the drum. In making calibrations of this or any other sort the student should be careful to see that the practical conditions are identical with the test conditions. An indicator reducing motion was calibrated in

the above manner and gave perfect reduction when the engine was jacked over, but gave imperfect results when the engine was working. This resulted from attaching the reducing motion

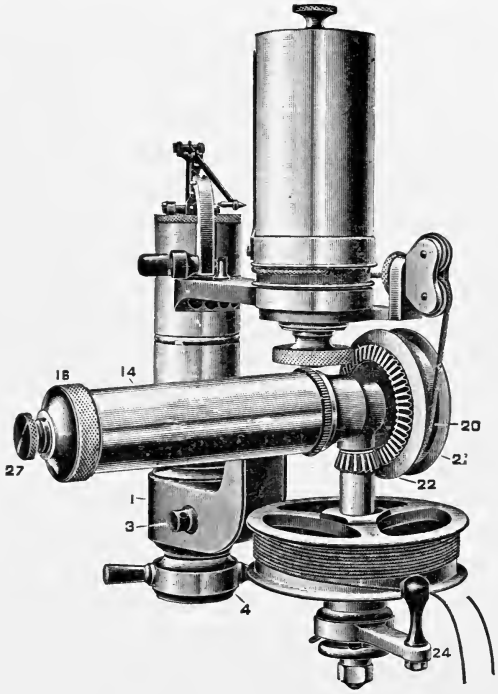

FIG. 33.

to the lower guide, which, when the engine was under full load, was found to vibrate enough to distort the card.

Pantographs theoretically give a perfect reduction. Numerous joints must be avoided, as each must be free from lost motion.

"Fig. 34 shows a pantograph device at midstroke. This is made of bar iron nicely riveted together. The indicator-cord may be attached at *b*. The end *a* is attached to a pin on the cross-head. The fixed fulcrum is at *c*. *a*, *b*, and *c* must always lie in the same straight line, and *ed* and *bn* must be parallel and equal to *fg*. Also $af \div nf$ = stroke of piston ÷ by the length of the indicator diagram." *

* Quoted from Practical Instruction for Using Steam-engine Indicator, Crosby, page 32.

"In Fig. 35, *f* is a rod moving in a slide parallel to the piston-rod. Link *bd* is attached to *f*, and link *ae* to the cross-head. *a*, *b*, and *c* must always lie in the same straight line. $ae \div bd$ and $ec \div cd$ = stroke of piston ÷ length of indicator diagram."

In Fig. 36, *a* and *b* are fixed ends of cord wrapped around

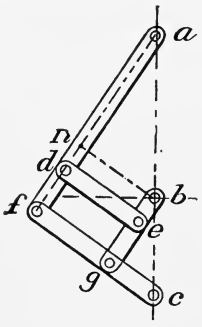

Fig. 34.

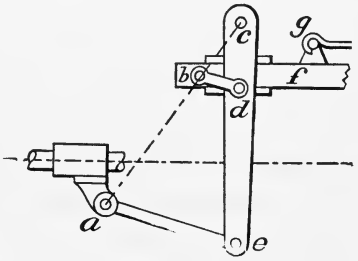

Fig. 35.

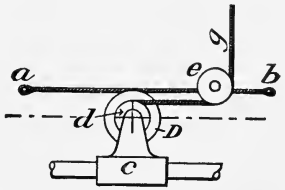

Fig. 36.

pulley *D*. Indicator-cord is attached to small pulley *d* and passes around guide-pulley *e*. *D* and *d* are attached to the cross-head. Diam. $D \div$ diam. d = stroke of piston ÷ by the difference between stroke of piston and length of card." *

"The most satisfactory driving-rig for indicating seems to be some form of well-made pantograph, with driving-cord of fine annealed wire leading to the indicator. The reducing motion, whatever it may be, and the connections to the indicator, should be so perfect as to produce diagrams of equal lengths when the same indicator is attached to either end of the cylinder, and produce proportionate reduction of the motion of the piston at every point of the stroke, as proved by test." †

Method of Taking Indicator-diagrams.—1. Before attaching an indicator to an engine be sure to blow steam freely through the pipes and cock to remove any grit that may have lodged there.

* Practical Instruction for Using Steam-engine Indicator, Crosby, page 32.

† See Trans. A. S. M. E. Standard Rules.

2. If the indicator has been unused for some time, or if it has been handled by others so that its condition is unknown, it should be taken apart and cleaned with gascline. "An occasional naphtha bath is good for an indicator, as it thoroughly cleanses every part." If any grit or other obstruction gets into the cylinder it will seriously affect the diagram and lead to bad results. It is not difficult to detect such trouble, and it should be remedied at once by taking out the piston, detaching the parts, and cleaning them as above described.

† "It is essential to know whether the indicator is in good condition for use, especially to know that the piston has perfect freedom of motion and is unobstructed by undue friction. To test this successfully detach the spring and afterwards replace the piston and piston-rod in their usual position, then holding the indicator in an upright position by the cylinder in the left hand, raise the pencil arm to its highest point with the right hand and let it drop; it should freely descend to its lowest point." The piston may be dented or burred from a fall or the upper part of the cylinder-bore may be dirty. It is better to have the piston fit rather loosely than the reverse. † "No diagrams should be accepted in which there is any appearance of want of freedom in the movement of the mechanism. A ragged or serrated line in the region of the expansion or compression line is a sure indication that the piston or some part of the mechanism sticks; and when this state of things is revealed, the indicator should not be trusted, but the cause should be ascertained and a suitable remedy applied. Entire absence of wire-drawing of the steam line, and especially a sharp, square corner at the beginning of the steam line, should be looked upon with suspicion, however desirable and satisfactory these features might otherwise be. These are frequently produced by an indicator which is defective owing to want of freedom in the mechanism. An indicator which is free when subjected to a steady steam pressure, as it is under a test of the springs under calibration, should be able to produce the same horizontal line, or substantially the same, after pushing the pencil down with the finger, as that traced after pushing the pencil up and subsequently tapping

† See Trans. A. S. M. E. Standard Rules.

it lightly. When the pencil is moved by the finger, first up and then down, the piston being subjected to pressure, the movements should appear smooth to the sense of feeling.

† "The point selected for attaching the indicator to the cylinder should never be the drip-pipe or any point where the water of condensation will run into the instrument if this can possibly be avoided. The admission of water with the steam may greatly distort the diagram. If it becomes necessary to place the indicator in such a position, as may happen when it is attached to the lower end of a vertical cylinder, the connection to the indicator must be short and direct, and in some cases it should be provided with a drip-chamber arranged so as to collect the water or deflect it from entering the instrument."

3. Adjust the drum-cord so that the drum rotates freely without knocking at either end of its stroke. If the cord is too short it will break or turn the indicator in its coupling if the latter is set up too tight. Beginners therefore should not set this coupling up taut before attaching the cord.

4. Lubricate the indicator-piston with ordinary cylinder oil for pressures above the atmosphere.

5. Warm up the indicator by admitting steam for a few seconds.

6. Shut off the steam by means of the cock in the indicator-plug. This admits air to the bottom of the indicator-piston.

Bring the pencil in contact with the paper and rotate the cylinder. This gives a reference line for pressures called the atmospheric line. Many prefer to draw this line after taking the card.

7. Turn the steam on the indicator, press the pencil, and take one or more cards.

8. Record all the data.

The commercial indicator-cards have forms printed on one side of the cards. This form should be filled out and in addition any information that has any probability of being of future value. One should remember that questions may arise other

† See Trans. A. S. M. E. Standard Rules.

than those of present interest. It is much better to have too many than too few data after the test is over.

It is advisable to make notes of special circumstances such as the end of the cylinder which is represented by the card, the size of pipes and ports, pressures at the boiler and at the throttle, description of the boiler and special incidents and accidents. On a locomotive diagram note the speed from the time elapsing in passing mile-posts, the position of the link and throttle, the character and number and weight of cars drawn, the grade, the size and position of the blast orifice, character of the coal and quantity burned, amount of water taken on.

In marine work take data that may be of value from the ship's log.

Fig. 37 is an indicator-diagram from a non-condensing engine in good condition. In most steam-engines it is desirable that

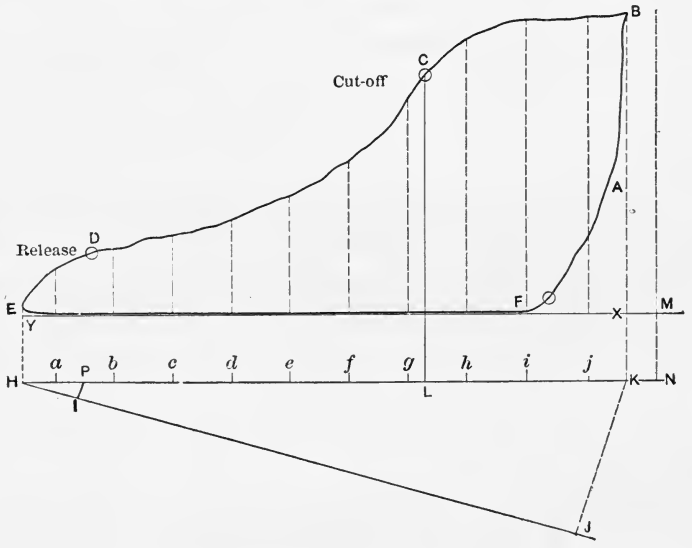

Fig. 37.

the crank-pin revolve at uniform speed. We shall find that this necessitates a very irregular motion of the piston. As the latter approaches the end of the stroke it slows down, coming to absolute rest at the end of its stroke, since it must reverse

its motion. On the return stroke the speed increases to a point near mid-stroke and then decreases as before. The card shows that the valve commences to open for steam just before the piston finishes the preceding stroke, at *A*, so that when the piston is actually on the dead-center and instantaneously at rest the valve is open—the amount is called lead—and admitting steam. The pressure against the piston rises rapidly and remains constant as long as the opening of the port is sufficient. When the piston is half-way between *B* and *C* the port has its maximum opening and the valve starts on its return to close the port. With a diminishing port opening for steam-supply the piston is now moving faster than it did in the earlier part of the stroke. This combination results in a diminution of pressure in the cylinder, since an increasing difference of pressure is necessary to give an increasing velocity to the steam that is required to supply an increasing volume. It is evident that *BCD* changes curvature at *C*, the center for *BC* being below and that for *CD* being above those curves. The *actual point of cut-off*, *C*, or piston position at the instant of port closing, is at the point of tangency of these two curves. † "This cut-off may be located by finding the point where the curve is tangent to a hyperbolic curve."

Inertia of Indicator Pistons.—Put a card on the drum of an indicator and rotate the drum uniformly. There being no steam on the indicator, pull the piston up by hand and let it drop during the uniform rotation of the drum. A figure, similar to Fig. 38, will be made, the spring causing the piston to vibrate above and below its proper position harmonically, i.e., in uniform periods of time. The amount of vibration is gradually lessened by the internal molecular friction in the spring as well as the various external resistances.

The movement of the piston of an engine is very irregular, but the movement of the crank is generally uniform. Equal distances along the circle of the crank-pin then measure equal periods of time. If the crests and hollows in a high-speed engine card be projected on the crank-circle it will be found that

† See Trans. A. S. M. E. Standard Rules.

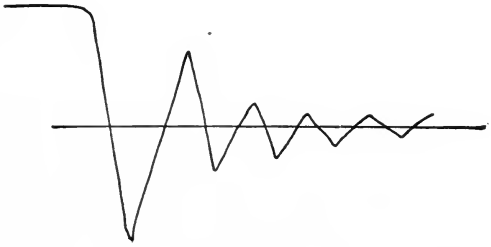

FIG. 38.

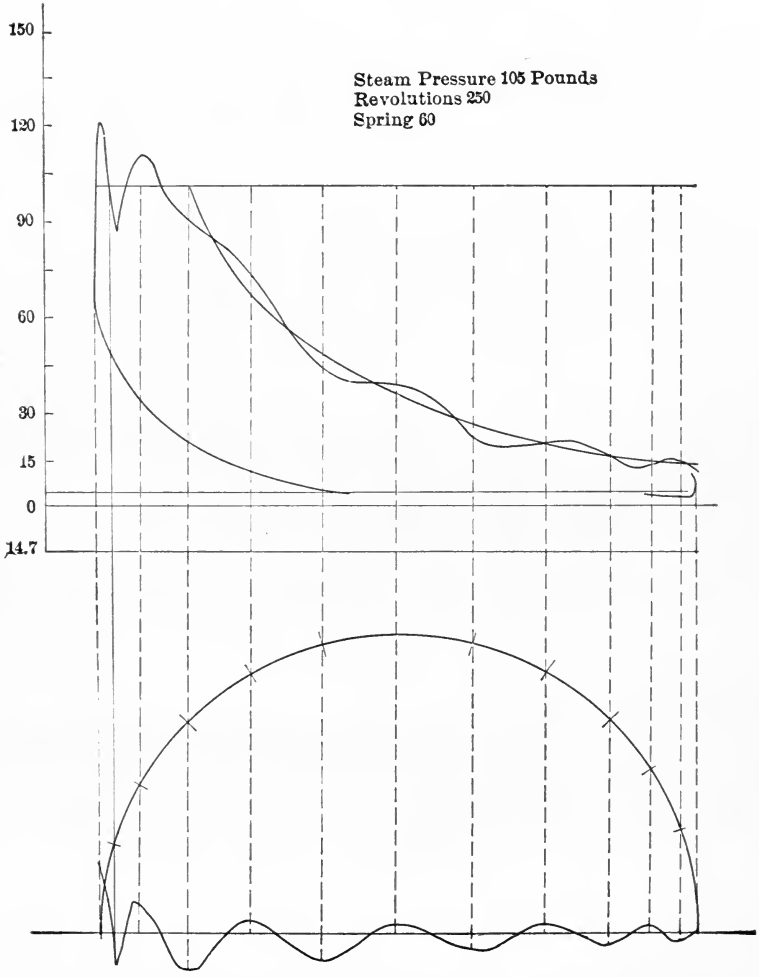

FIGS. 39 AND 40.

they occur at uniform arc distance apart. This shows that the sudden impingement of the steam on the indicator piston produces an harmonic vibration similar to that just described. (Figs. 39 and 40.)

All cards from high-speed engines should show some tendency to wave as it is a natural effect. If it is taken out by friction, the cards are surely in error. At the same time a large wave motion should be avoided by using heavier springs. Fig. 42 was taken from the engine giving card, Fig. 39, at the same

FIG. 41.

FIG. 42.

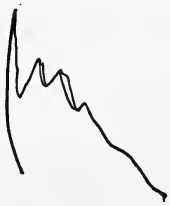

FIG. 43.

speed, the only difference being the use of a heavier spring. In slow-speed engines, the vibration spends itself in the admission line due to the lessened amount of the blow and the length of time required to make the admission line. Similarly, there will be less vibration if the compression is heavy, as the blow at admission is lessened. Figs. 41 and 43.

EXERCISES. Take an indicator apart and examine its construction carefully. Give a technical description of the indicator. Describe gage testers, reducing motions, or other apparatus in your laboratory, taking particular pains to express yourself clearly, to arrange your ideas sequentially, and to use technical words correctly.

CHAPTER III.

CURVES AND THE WORK OF EXPANSION.

Methods of Drawing the Hyperbola $PV=C$ (Fig. 44).—The isothermal curve of expansion of perfect gases and the curve of expansion of steam in a cylinder is assumed to follow the law

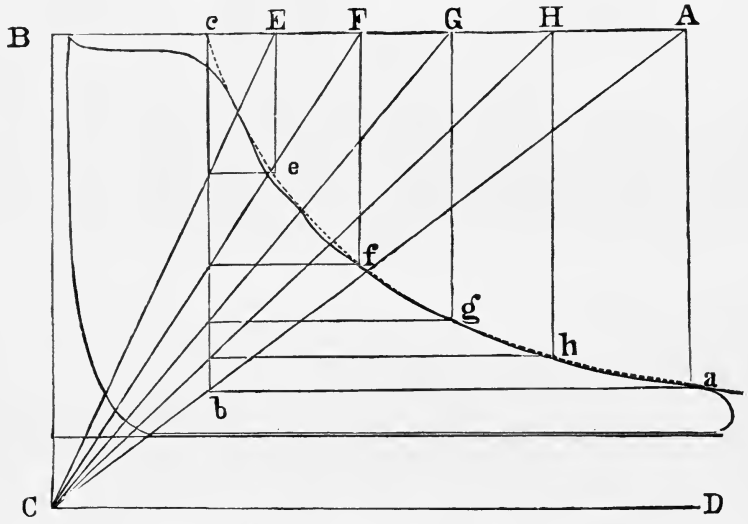

FIG. 44.—Method of Drawing an Hyperbola.

"The product of the absolute volume and the absolute pressure is constant for any stage of the expansion." To draw the curve, the absolute pressure, and absolute volume at one stage of the expansion (or the compression) is sufficient.

First Method.—From any point *C* draw the line of zero volume *CB* and the line of zero pressure *CD*. Being given the absolute pressure *CB* and the absolute volume *Bc* of some point *c* of the curve lay them off and determine the position of *c*. Through *c* draw a horizontal line *BA* and a vertical line *cb* of indefinite

length. From C draw radiating lines at random, cutting the vertical line cb and the horizontal line BA. Through the points of intersection draw lines parallel to CD and CB to intersect in points e, f, g, h, and a. A smooth curve drawn through these points will be the curve required. If the abscissa and ordinate for any one of these points are known, by similar triangles it is easy to show that their product is equal to the product of the same quantities for the original point c. If it is desired to produce the hyberbola from a upward the same method may be employed, but the line BA is now ba and the line cb is replaced by aA.

The line CB is called the clearance line. A line parallel to CB and tangent to the indicator-card at the extreme left will cut off the clearance on CD. CD is also called the perfect vacuum line.

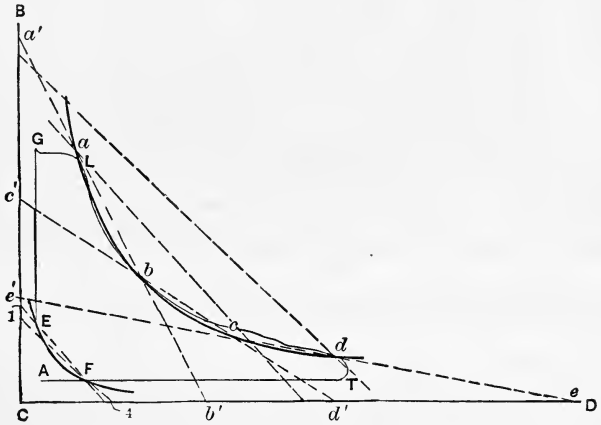

FIG. 45.—Method of Drawing an Hyperbola.

Second Method (see Fig. 45).—It is well known if a rectangular hyperbola and its asymptotes are given that if a straight line is drawn cutting the curve in two places and both asymptotes the distance of one of the points on the curve from one asymptote is equal to the distance of the other point on the curve from the other asymptote. Suppose that we have the asymptotes CB and CD and any point a of the curve. Through a draw several radiating lines similar to $a'abb'$. Only one is drawn to avoid confusion. Lay off bb' equal to aa'; b in each will

be a point of the curve. Any of the points b will serve as a did for finding other points. The same method of construction will serve on the compression curve FE.

† **The Point of Cut-off.**—"The term 'cut-off' as applied to steam-engines, although somewhat indefinite, is usually considered to be at an earlier point in the stroke than the beginning of the real expansion line. That the cut-off may be defined in exact terms for commercial purposes, as used in steam-engine specifications and contracts, the Committee recommends that, unless otherwise specified, the *commercial cut-off*, which seems to be an appropriate expression for this term, be ascertained as follows: Through a point showing the maximum pressure

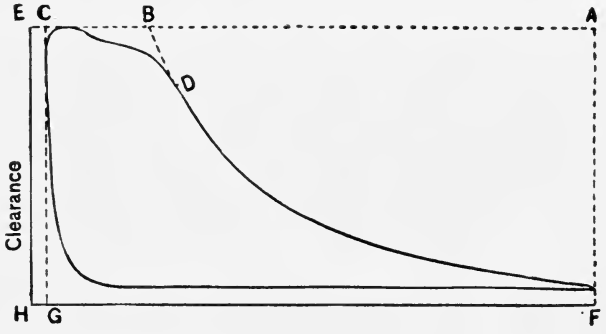

FIG. 46.—Four-valve Engine. Slow-speed Commercial Cut-off $= \frac{BC}{AC}$.

during admission draw a line parallel to the atmospheric line. Through the point on the expansion line near the actual cut-off draw a hyperbolic curve. The point where these two lines intersect is to be considered the *commercial cut-off* point. The percentage is then found by dividing the length of the diagram measured to this point by the total length of the diagram and multiplying the result by 100."

"The principle involved in locating the commercial cut-off is shown in Figs. 46 and 47, the first of which represents a diagram from a slow-speed Corliss engine, and the second a diagram from a single-valve high-speed engine. In the latter case where, owing to the fling of the pencil, the steam line vibrates,

† See Trans. A. S. M. E. Standard Rules.

the maximum pressure is found by taking a mean of the vibrations of the highest point."

The *commercial cut-off*, *B*, as thus determined is situated at an earlier point of the stroke than the *actual cut-off*, *D*, referred to.

Fig. 37. Steam being elastic entirely fills an increasing volume, but its pressure diminishes, as is seen by the decreasing ordinates of the expansion curve *CD*. We have already seen that it is necessary to reject the steam during the return-stroke. At the point *D*, where there is another change in the curvature, the exhaust-valve opens and the pressure rapidly falls as the piston moves to the end of the stroke at *E*. The piston now returns and the steam is forced out by the piston sweeping it out. As the resistance is constant the back-pressure line is parallel to the at-

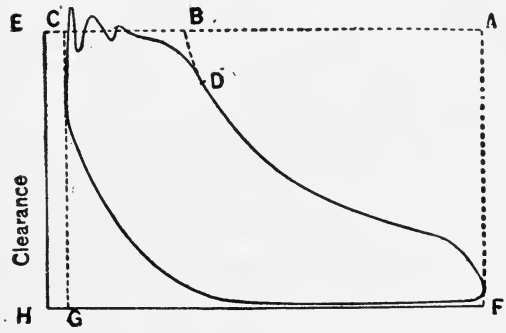

FIG. 47.—Single-valve Engine. High-speed Commercial Cut-off $= \frac{BC}{AC}$.

mospheric line *XY*. If the exhaust-passages had been short and ample the line *EF* would have practically coincided with *XY*.

We have seen how the atmospheric line was drawn. But pressures measured from it are not absolute pressures, as we well know that the atmospheric pressure is some 14.7 pounds per square inch above zero pressure. The steam-gages used on boilers indicate not the steam-pressure in the boiler but the bursting pressure, which is the difference between the steam-pressure inside and the atmospheric pressure outside. Hence, to obtain the absolute or true pressure above zero we must add the atmospheric pressure to all pressures that are measured above the atmosphere. The barometer gives this pressure in inches of mercury that can be converted into pounds per square inch by

multiplying by $\frac{14.7}{30}=0.491$. In all localities near the sea-level sufficient accuracy is attained by using 14.7 pounds per square inch as the atmospheric pressure.

Parallel to XY (Fig. 37) and at a distance below it equal to 14.7 pounds to the scale of pressures of the indicator-card, draw a line HK. The ordinates of any point of the card measured to this line give the absolute pressure in the cylinder. At C then the pressure in the cylinder is CL.

Clearance.—Place the piston at the end of its stroke, then the space between the adjoining faces of the cylinder-head and the piston, including the volumes that lead into this space (such as ports up to the valve-face, drip-pipes, indicator-pipes, water-relief pipes), is called clearance. In well-designed engines of large size it is from 3 to 5 per cent of the volume swept through by the piston, in plain slide-valve engines the percentage varies from 7 to 15 per cent, in piston-valve engines it varies from 12 to 25 per cent.

Method of Drawing Clearance-line. — One writer has proposed the name cylindrus for the volume swept through by the piston. This is the volume shown by the indicator-card, since any part of the stroke passed over by the piston becomes volume when multiplied by the area of the piston. If the clearance volume at each end is 5% of the cylindrus we obtain, on dividing the clearance by the area of the piston, a linear distance that is 5% of the stroke. This distance may be added to the proper end of the atmospheric line when the length of that line originally represented the length of the stroke. In Fig. 37 lay off $XM=5\%$ of XY. Then the absolute volume of the steam at any point L is NL and its absolute pressure is CL.

† **Ratio of Expansion.**—The ratio of expansion for a simple engine is determined by dividing the volume corresponding to the piston displacement, including clearance, by the volume of the steam at the *commercial cut-off*, including clearance.

† For example, in a simple engine, referring to Figs. 46 and 47, the ratio of expansion is the entire distance HF, including clear-

† See Trans. A. S M. E. Standard Rules.

ance, divided by the distance EB, including clearance; that is, $\frac{HF}{EB}$.

Indicated Horse-power.—In finding the indicated horse-power (see page 31), we assumed the mean effective pressure. This quantity may be found if we have a correct average card or from the average of a number of cards. Suppose Fig. 37 is such a card. With a triangle erect perpendiculars HE and KB tangent to the extremities of the card. At H lay off HJ, making any angle with HK. Assume any distance HI and lay it off ten times to some point J. Join J and K. Draw IP parallel to JK. Bisect HP at a. Lay off HP ten times from a and through the points so found draw the dotted ordinates as shown. These ordinates are the mean ordinates of a series of consecutive trapezoids. On a long slip of paper lay off these ordinates consecutively. Measure the total length and divide by the number of ordinates and thus obtain the length of the mean ordinate. This mean length multiplied by the scale of the spring used in the indicator when the card was taken gives the mean pressure.

The mean gross forward pressure is the mean ordinate of $HEDCBK$. The mean back pressure is the mean ordinate of $HEABK$. The mean effective pressure is the difference of the two preceding pressures.

† "The *indicated horse-power* should be determined from the average mean effective pressure of the diagrams taken at intervals of twenty minutes, and at more frequent intervals if the nature of the test makes this necessary, for each end of each cylinder. With variable loads, such as those of engines driving generators for electric railroad work, and of rubber grinding- and rolling-mill engines, the diagrams cannot be taken too often. In cases like the latter, one method of obtaining suitable averages is to take a series of diagrams on the same blank card without unhooking the driving-cord, and apply the pencil at successive intervals of ten seconds until two minutes' time or more has elapsed, thereby obtaining a dozen or more indications in the time covered. This tends to insure the determination of a fair average for that period. In taking diagrams for variable loads, as indeed for any load,

† See Trans. A. S. M. E. Standard Rules.

the pencil should be applied long enough to cover several successive revolutions, so that the variations produced by the action of the governor may be properly recorded. To determine whether the governor is subject to what is called 'racing' or 'hunting' a 'variation diagram' should be obtained; that is, one in which the pencil is applied a sufficient time to cover a complete cycle of variations. When the governor is found to be working in this manner, the defect should be remedied before proceeding with the test."

Testing Indicator-springs.—"To make a perfectly satisfactory comparison of indicator-springs with standards, the calibration should be made, if this were practical, under the same

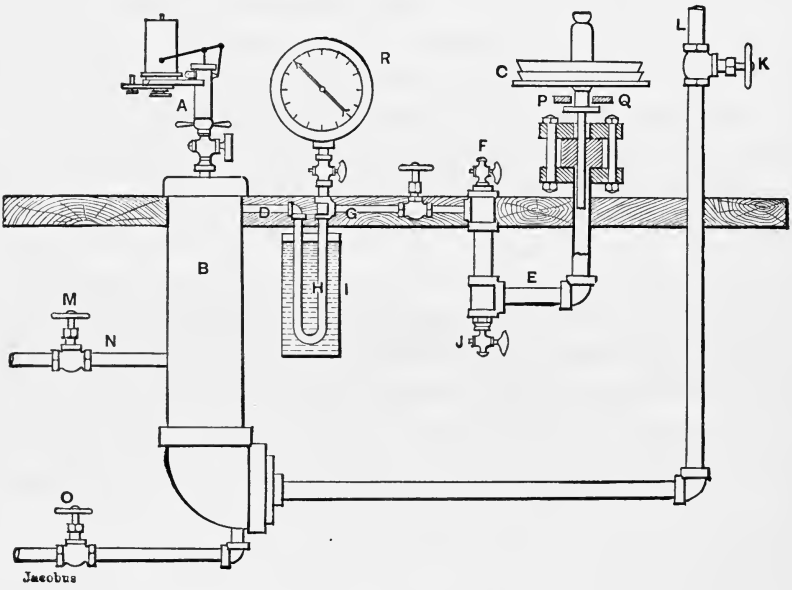

FIG. 48.—Indicator-spring Testing Apparatus.

conditions as those pertaining to their ordinary use. Owing to the fact that the pressure of the steam in the indicator-cylinder and the corresponding temperature are undergoing continual changes, it becomes almost impossible to compare the springs with any standard under such conditions. There must be a constant pressure during the time that the comparison is being made.

"The apparatus used for testing indicators at ordinary pressures above the atmosphere is shown in Fig. 48. The indicator is placed at *A* on top of the cylinder *B*. The cylinder *B* is made of a piece of 6-inch standard pipe about 2 feet long. The pressure is measured by means of a plug-and-weight device, *C*, which is spun around so as to eliminate the effect of friction. The bottom of the plug is at the same level as the pipe *D*. The U-shaped pipe *E* is filled with oil. Before starting to calibrate the indicator, the pet-cock *F* is opened slightly in order to allow any air in the pipe *G* and the siphon *H* to escape. The siphon *H* is surrounded by water contained in the vessel *I*, which condenses the steam which enters it through the pipe *D*, so that when all the air present is allowed to escape through the pet-cock *F*, the pipe *G* and the siphon *H* will be filled with water. *J* is a pet-cock for removing any water that may collect at the bottom of the siphon *E* after the apparatus has been in use for a long time. The pressure is adjusted by regulating the amount of opening of the valve *K* in the supply-pipe *L*, which furnishes steam, water, or compressed air to the apparatus, and also by adjusting the valve *M* in the escape-pipe *N*. *O* is a valve for removing any water which may collect in the bottom of the cylinder *B* when steam is used, and for draining out the water after calibrating under hydrostatic pressure. The pan of the plug-and-weight device *C* is limited in its movement by means of a fork which comes in contact with it only when the pan is in the extreme positions. The two prongs of this fork are shown in section at *P* and *Q*. *R* is a gage for showing the approximate pressure. The readings of the gage *R* are not used in testing the indicator, but as a general guide in the use of the apparatus. The diameter of the plug in the plug-and-weight device is 0.5″ and the hole in the bushing is 0.505″. Both the plug and bushing are ground true. The average area of the plug and of the hole in the bushing is used in calculating the weight required for a given pressure.

"In testing indicators with steam-pressure, the steam is brought to the maximum pressure to which the indicator is to be subjected; the indicator-cock is then opened and closed quickly a number of times to heat the indicator. The steam

is then released from the cylinder *B*, and the atmospheric line is taken after turning the indicator-cock to the proper position. In taking the atmospheric line, as well as the lines for any other pressure, the pointer of the indicator is first pressed upward, and then released and a line taken, then pressed downward and released and a line taken, the indicator being rapped sharply with a small wooden stick before taking each line, as has already been explained. After taking the atmospheric line, steam is admitted through the valve *K*, until the pan-and-weight device is balanced while being rotated. This requires a very fine adjustment, and the line is not taken until there is no tendency for the plug-and-weight device either to rise or fall." *

† "We recommend, therefore, that for each required pressure the first step be to open and close the indicator-cock a number of times in quick succession, then to quickly draw the line on the paper for the desired record, observing the gage or other standard at the instant when the line is drawn. A corresponding atmospheric line is taken immediately after obtaining the line at the given pressure, so as to eliminate any difference in the temperature of the parts of the indicator. This appears to be a better method (although less readily carried on and requiring more care) than the one heretofore more commonly used, where the indicator-cock is kept continually open, and the pressure is gradually rising or falling through the range of comparison.

"The calibration should be made for at least five points, two of these being for the pressures corresponding as near as may be to the initial and back pressures, and three for intermediate points equally distant.

"For pressures above the atmosphere, the proper standard recommended is the dead-weight testing apparatus, or a reliable mercury column, or an accurate steam-gage proved correct, or of known error, by either of these standards. For pressures below the atmosphere the best standard to use is a mercury column.

"The correct scale of spring to be used for working out the mean effective pressure of the diagrams should be the average

* Jacobus, "Testing Indicators," Trans. A. S. M. E., Vol XX.

† See Trans. A. S. M. E. Standard Rules.

based on the calibration, and this may be ascertained in the manner pointed out below.

"When the scale of the spring determined by calibration is found to vary from the nominal scale with substantial uniformity, it is usually sufficiently accurate to take the arithmetical mean of the scales found at the different pressures tried. When, however, the scale varies considerably at the different points, and absolute accuracy is desired, the method to be pursued is as follows: Select a sample diagram and divide it into a number of parts by means of lines parallel to the atmospheric line, the number of these lines being equal to and corresponding with the number of points at which the calibration of the spring is made. Take the mean scale of the spring for each division and multiply it by the area of the diagram enclosed between two contiguous lines. Add all the products together and divide by the area of the whole diagram; the result will be the average scale of the spring to be used. If the sample diagram selected is a fair representative of the entire set of diagrams taken during the test, this average scale can be applied to the whole. If not, a sufficient number of sample diagrams representing the various conditions can be selected, and the average scale determined by a similar method for each, and thereby the average for the whole run."

Isothermal Expansion (Fig. 49). — We may suppose that the walls allow heat to pass through them and that we have a source of heat so arranged that the temperature of the gas is not allowed to fall but is kept constant during the expansion. The law of isothermal expansion is $P_1V_1 = P_2V_2 = P_3V_3 = PV$ or $PV = C$. Note carefully that when a subscript is used the quantity to which it is added is no longer variable, for it denotes a fixed value for that problem. P_1 is the admission pressure in this discussion and could not be used for any value of the pressure during the expansion. On the contrary, take *any* point on the expansion curve, the ordinate at that point measures P and the abscissa measures its volume, V. Hence P_1V_1 and P_2V_2 are specific values of the general formula PV. As the area of the piston is a common multiplier to all parts of the stroke, it is evident that if we take an infinitesimal part of the stroke it

becomes an infinitesimal part of the volume when multiplied by the area of the piston. It may be called dV and when multiplied by P it becomes work. It could be written $(PA)dL$, where PA is equal to the total pressure and dL is in feet.

The work done during admission is P_1V_1. The work done during expansion is $\int_{V_1}^{V_2} PdV$.

But P varies with V, and to integrate we must have but one

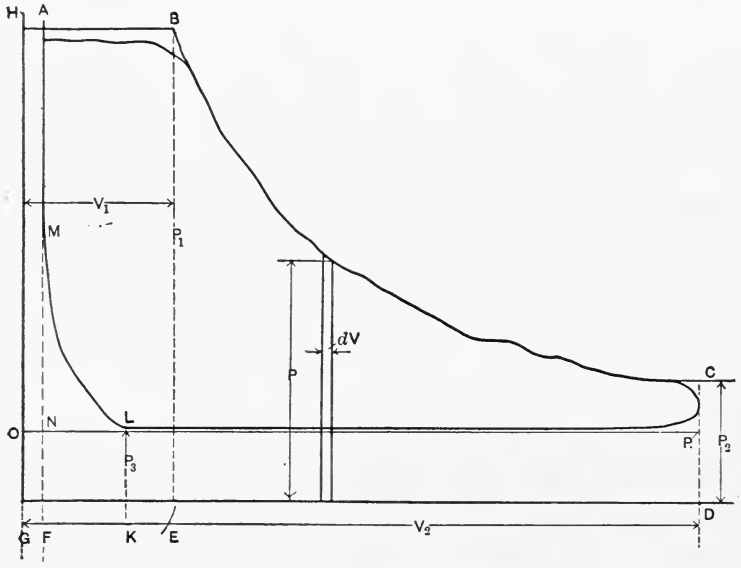

FIG. 49.

variable and that must be V. The variable P must therefore be expressed in terms of the variable V.

But $P_1V_1 = PV$, therefore $P = \frac{P_1V_1}{V}$.

Substitute this value of P and we obtain for the area $BCDE$ under the expansion curve

$$\int_{V_1}^{V_2} \frac{P_1V_1}{V} dV = P_1V_1 \int_{V_1}^{V_2} \frac{dV}{V} = P_1V_1 \log_e V \Big]_{V_1}^{V_2}$$

$$= P_1V_1 (\log_e V_2 - \log_e V_1) = P_1V_1 \log_e \frac{V_2}{V_1} = P_1V_1 \log_e r.$$

As r is the ratio of the final absolute volume to the initial absolute volume of the gas it is called the ratio of expansion.

$\text{Log}_\epsilon\ r$ is an abstract quantity and the expression $P_1V_1 \log_\epsilon r$ shows that the work done during *expansion* is ($\log_\epsilon r$) times the work of admission. The subscript ϵ denotes that a table of Naperian or hyperbolic logarithms must be used (Table II).

The total gross forward work, *HABCDG*, is then

$$P_1V_1 + P_1V_1 \log_\epsilon r = P_1V_1\ (1 + \log_\epsilon r).$$

The mean gross forward pressure would be found by dividing by V_2,

$$\frac{P_1V_1(1+\log_\epsilon r)}{V_2} = \frac{P_1(1+\log_\epsilon r)}{r} = P_m.$$

The quantity that is actually desired is the mean pressure of the diagram *ABCRLMA*, which would be the mean pressure of the theoretical indicator-card.

Let $V_c = GF$, the volume of the clearance (when multiplied by A, the area of the piston);

$V_3 = GK$, the volume of steam enclosed in the cylinder when the exhaust-valve closed;

$\frac{V_3}{V_c} = r_c$ = ratio of compression;

$P_c = MF$, the pressure that the compression steam would have if compressed into the clearance volume;

ML be an isothermal curve or follow the law $PV = C$.

Therefore $$P_3V_3 = P_cV_c$$

and

$$\text{area } MLKF = P_3V_3 \log_\epsilon \frac{V_3}{V_c} = P_cV_c \log_\epsilon \frac{V_3}{V_c} = -P_cV_c \log_\epsilon \frac{V_c}{V_3}.$$

Evidently

$$HAFG = P_1V_c,$$

$$FMLK = P_3V_3 \log_\epsilon \frac{V_3}{V_c} = P_3V_3 \log_\epsilon r_c,$$

$$LRDK = P_3(V_2 - V_3);$$

$$\therefore ABCRLMA = P_1V_1(1+\log_\epsilon r) - P_1V_c - P_3V_3 \log_\epsilon r_c - P_3(V_2 - V_3.)$$

The mean effective forward pressure $= \frac{ABCRLMA}{V_2 - V_c} = P_{m_e}$.

Theoretically, these formulas apply only to the isothermal expansion of perfect gases. Practically, they are used for the expansion of steam in the steam-engine. The temperature of the steam falls during expansion, but, owing to the re-evaporation of condensed steam, the actual expansion curve as shown by the indicator follows the law $PV = C$.

The area of a piston is 1000 square inches; the stroke is 38 inches; clearance 2 inches; cut-off is 6 inches from the beginning of the stroke; initial pressure is 75 pounds gage; the back pressure is 16 pounds absolute; the exhaust closes 4 inches from the end of the stroke; the engine is double-acting, making 100 revolutions per minute. Draw the card, find the P_{m_e} and the theoretical I.H.P., taking clearance into consideration.

Initial pressure absolute, $75 + 15 = 90$.

$$r = \frac{38+2}{6+2} = 5.$$

$$FM = \left(\frac{4+2}{2}\right)16 = 48.$$

Total area $HBCDG = P_1 V_1 (1 + \log_\epsilon r)$.

$$90 \times 1000 \times \tfrac{8}{12}(1 + \log_\epsilon r) =$$
$$90 \times 1000 \times \tfrac{2}{3}(1 + 1.6) = 156{,}000.$$

$$HAFG = 90 \times 1000 \times \tfrac{2}{12} = 15{,}000$$
$$LRDK = 16 \times 1000 \times \tfrac{34}{12} = 45{,}333$$
$$MLKF = 48 \times 1000 \times \tfrac{2}{12} \log_\epsilon \frac{4+2}{2} = 8{,}800$$
$$69{,}133 \qquad 69{,}133$$
$$86{,}867 \text{ ft.-lbs.}$$

At 100 revolutions per minute the work would be

$$86{,}867 \times 200 = 17{,}373{,}400 \text{ or } \frac{17{,}373{,}400}{33{,}000} = 526 \text{ I.H.P.}$$

$$P_{m_e} = \frac{86{,}867}{1000 \times \frac{38}{12}} = 27.4 \text{ pounds per square inch.}$$

Ex. 19. Air at a constant pressure of 60 pounds per square inch absolute is admitted into a cylinder, without clearance, till the piston sweeps through 3 cubic feet. The air is then cut off and the piston sweeps through 9 more cubic feet, the temperature remaining constantly at 100° F. On the return stroke, the air is exhausted at 15 pounds per square inch absolute. Find the gross and net work per stroke, P_m and P_{me}, and the pounds of air required per stroke. Draw the card. How many B.T.U. were added during expansion?

Ex. 20. Air is drawn into an air-compressor at 14 pounds per square inch absolute and 70° F. It is compressed till the pressure is 42 pounds absolute and the volume is 60 cubic feet; valves then open and the air is forced out at that constant pressure. If the compression were isothermal, find the net work per stroke, P_m and P_{me}, and the weight of dry air compressed. Draw the card.

Ex. 21. The area of a piston is 4 square feet and its stroke is 2 feet. Steam at 60 pounds per square inch absolute is admitted to the cylinder till the piston moves 8 inches from the beginning of its stroke when the steam is cut off. If the steam expand in accordance to the law $PV=C$, and the back pressure on the return stroke is 15 pounds absolute, find the gross and the net forward work per stroke, P_m and P_{me}. Draw the card. No clearance.

Ex. 22. Steam at 75 pounds gage (90 pounds absolute) is admitted to a cylinder $20''\times24''$ (20 inches diameter and 24 inches stroke). Cut-off at 1/4 stroke. Back pressure 15 pounds absolute or 0 gage pressure. The engine is double-acting, making 90 revolutions per minute; no clearance. Draw the card. Find the P_m and P_{me} and the I.H.P.

Ex. 23. In a cylinder with clearance when the piston is on the return stroke, the back pressure of the steam in the cylinder is 16 pounds absolute when the exhaust-valve closes and the volume is 3 cubic feet. At the end of the stroke the clearance volume is 1 cubic foot. Draw the recompression curve and find the work of compression in foot-pounds.

Ex. 24. Take the same data as in Ex. 22, but cut-off at 1/9 stroke, and find the same quantities.

Diagram Factor. — "The diagram factor is the proportion borne by the actual mean effective pressure measured from the indicator-diagram to that of a diagram in which the various operations of admission, expansion, release, and compression are carried on under assumed conditions. The factor recommended

refers to an ideal diagram which represents the maximum power obtainable from the steam accounted for by the indicator-diagrams at the point of cut-off, assuming first that the engine has no clearance; second, that there are no losses through wire-drawing the steam either during the admission or the release; third, that the expansion line is a hyperbolic curve; and fourth, that the initial pressure is that of the boiler and the back pressure that of the atmosphere for a non-condensing engine, and of the condenser for a condensing engine.

"The diagram factor is useful for comparing the steam distribution losses in different engines, and is of special use to the engine designer, for by multiplying the mean effective pressure obtained from the assumed theoretical diagrams by it he will obtain the actual mean effective pressure that should be developed in an engine of the type considered. The expansion and compression curves are taken as hyperbolas, because such curves are ordinarily used by engine-builders in their work, and a diagram based on such curves will be more useful to them than one where curves are constructed according to a more exact law.

"In cases where there is a considerable loss of pressure between the boiler and the engine, as where steam is transmitted from a central plant to a number of consumers, the pressure of the steam in the supply main should be used in place of the boiler pressure in constructing the diagrams.

"The method of determining the diagram factor is best shown by referring to Figs. 50, 51, 52, which apply to a simple non-condensing engine and a simple condensing engine.

In Fig. 50, *RS* represents the volume of steam at boiler pressure admitted to the cylinder, *PR* and *OS* being hyperbolic curves drawn through the compression and cut-off points respectively. In Fig. 51, the factor is the proportion borne by the area of the actual diagram to that of the diagram *CNHSK*. In Fig. 52, the factor is the proportion borne to the area of the diagram *CNHSK*. In Fig. 51, where the diagram is the same as in Fig. 50, the distance *CN* is laid off equal to *RS* shown in Fig. 50, and the curve *NH* is a hyperbola referred to the zero lines *CM* and *MJ*. In Fig. 52, the distance *CN* is found in a similar way.

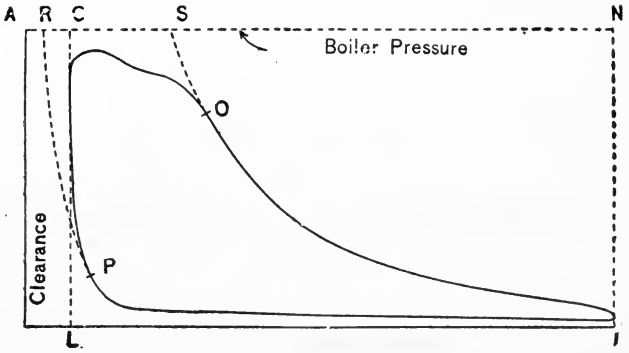

FIG. 50.

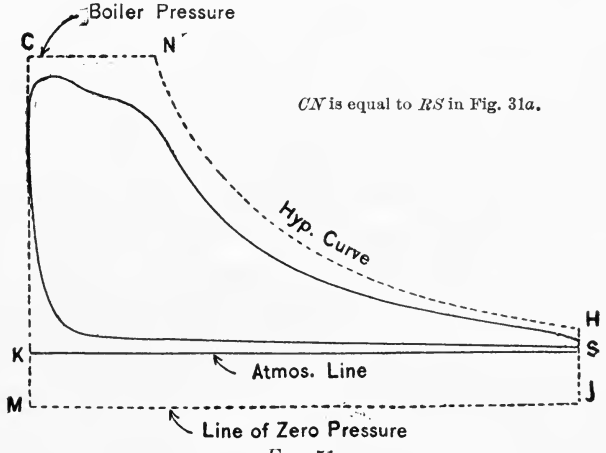

FIG. 51.

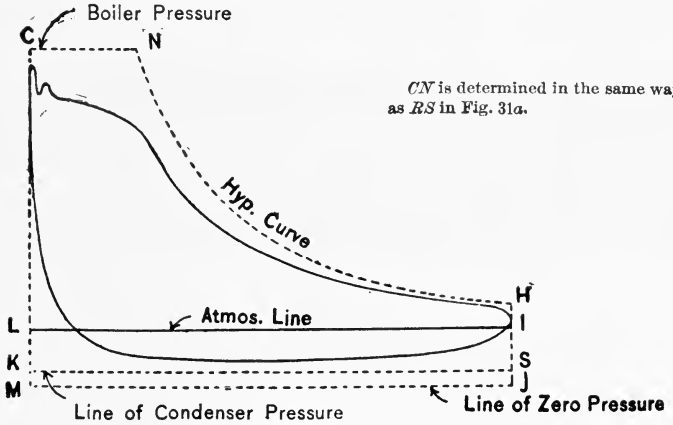

FIG. 52.

Diagram Factor.

Elimination of Clearance Steam.—*RS* or *CN* measures the net steam that passes through the cycle. We shall find that an entropy diagram measures the heat added; that is, the heat of formation of the admission steam measured above its proper feed-water temperature. It is then necessary to eliminate the clearance steam from the diagram. Figs. 51 and 52 show how this is done.

It is important to note that the diagram factor is based on an ideal diagram the back-pressure line of which is neither the *zero* line nor the *expected back-pressure* line, but an ideal line of back pressure. The ideal back-pressure line for a condensing engine is the assumed pressure in the condenser and in a non-condensing engine it is the atmospheric pressure. Compressing the steam to boiler pressure is in effect avoiding the complication of considering clearance. Note further that the pressure during admission is the boiler pressure and hence the efficiency of the pipe line is included n the diagram factor. If the line loss is very great the steam pressure at the throttle may be used, but that fact should be specially noted. Hence in choosing a diagram factor or in finding it practically for a definite case, it is essential that these elements be properly applied.

CHAPTER IV.

ZEUNER AND BILGRAM VALVE-DIAGRAMS AND DESIGN OF PLAIN SLIDE-VALVES.

The Throw of Cranks and Eccentrics (Figs. 53 and 54).— The throw or radius of a crank is the distance from the center of the crank-pin to the center of its shaft or the distance R in Fig. 53. As it is evident from the definition that the length of the crank-pin radius does not affect the crank throw, a modified form of the crank may be obtained by increasing the radius

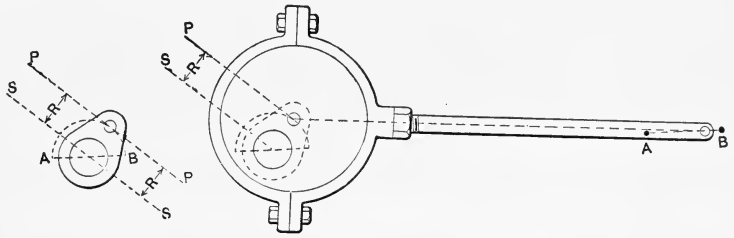

FIG. 53. FIG. 54.

of the crank-pin till its periphery extends beyond the shaft as in Fig. 54.

This form of crank is called an eccentric.

Its throw or eccentricity is the distance from the center of the shaft to the center of the eccentric or the distance SP in Fig. 54.

The eccentricity or throw of an eccentric is improperly called the radius of the eccentric. The radius of the eccentric circle as shown above does not affect the properties of the eccentric as an eccentric.

The travel of a valve in one direction is twice the throw of its eccentric (unless modified by lever-arms), viz., $2SP = AB$.

Piston Travel with a Finite Connecting-rod (Fig. 55).

Let $R = OD$ = crank throw;

$L = Dd$ = connecting-rod length;

ab = travel of cross-head;

then with centers a and d, draw the arcs CAC' and Dg, using the length of the connecting-rod as a radius to the same scale that AO = crank throw. It is evident that $ad = CD = Ag$ = the travel of the cross-head = piston travel for a crank rotation of θ degrees from OA.

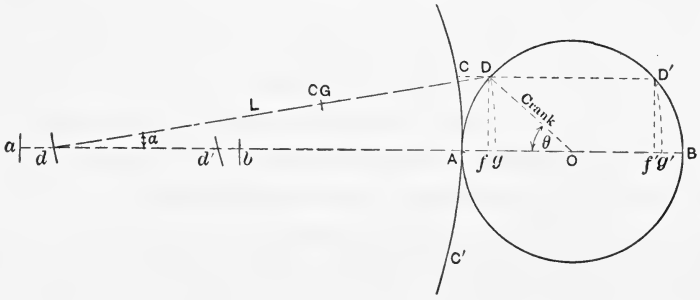

FIG. 55.

Drop the perpendicular Df; then, from the figure, we see that the piston travel for a finite connecting-rod is equal to

$$fg + fA = L - L\cos\alpha + R - R\cos\theta = L(1-\cos\alpha) + R(1-\cos\theta).$$

Piston Travel with an Infinite Connecting-rod.—As the center d, Fig. 55, is moved to the left by the use of longer rods, the curve Dg approaches closer to Df and when d is at an infinite distance the arc becomes the straight line Df.

With an infinite rod the travel is therefore

$$fA = R - R\cos\theta.$$

The equation for a finite rod gives the same result when $\alpha = 0$ and $L = \infty$.

Fig. 56 shows a crank-pin working in a yoke; the motion produced is equivalent to that which would be produced by a theoretical rod of infinite length. It is used in some forms of

steam-pumps. It is usual to consider the *eccentric*-rod as a rod of infinite length, as it is often forty times the *eccentric* throw in length. The *connecting*-rod is usually only five to seven times the crank throw in length, and in accurate work the exact position of the piston for different crank positions must be found. The graphic methods given above are usually preferred in the solution of all valve-diagram problems.

Position of a Slide-valve.—The position of the *piston* is always found by measuring the distance it is from the beginning or end

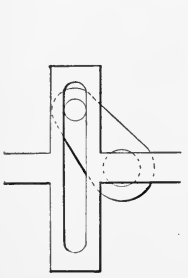

Fig. 56.

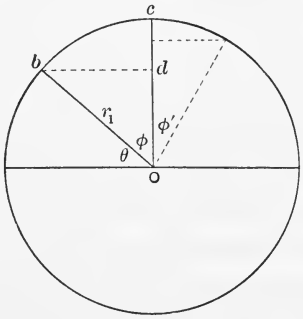

Fig. 57.

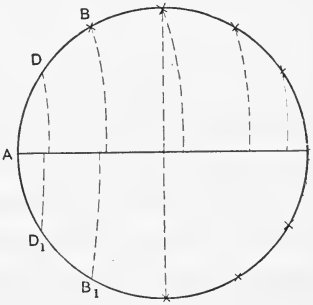

Fig. 58.

of its stroke, as shown above. It is very convenient in finding the position of a *valve* to measure the distance it is from its *mid-position*. This is never done with pistons, but is always done with slide-valves. As the *eccentric*-rod is generally assumed as infinite in length we have, Fig. 57.

if r_1 = eccentric throw

and ϕ = the angle that the eccentric radius is from its *midposition*,

$bd = r_1 \sin \phi$ = distance valve has moved from its *midposition*.

It is evident that the valve will be in its midposition when the eccentric is in its midposition, *oc*, if *oa* and *oe* are the positions of the eccentric when the valve is at the ends of its travel.

Effect of Finite Connecting-rod.—In all steam-engines every effort is made to have the crank-pin move with uniform velocity, viz., pass over equal spaces in equal times. If the crank-pin does this, it will be found that the motion of the piston is quite irregular and the shorter the connecting-rod the greater is this irregularity. To prove this take any crank-circle, as in Fig. 58,

and divide it up into equal arcs *AD*, *DB*, etc. The student should compare the amount of motion for equal crank-angles:

1. At the ends and middle of a stroke.
2. At the two ends of a stroke.
3. During the forward and return strokes.
4. With connecting-rods of different lengths.

The Slide-valve.—We have seen that the sum of all the impacts of the steam molecules on the face of the piston causes it to move and so converts some of the kinetic energy (or energy of motion) of those molecules into work. If the supply of steam be cut off after a certain amount of it has entered the cylinder, more energy may be extracted from the steam that has entered by allowing it to expand. It will do this if the resistance be gradually lessened.

There are a number of variables to consider, but we may assume for the present that variation of velocity will bring about the necessary equality between the steam-pressure and the resistance, the velocity increasing if the resistance decreases and becoming less with increased resistance.

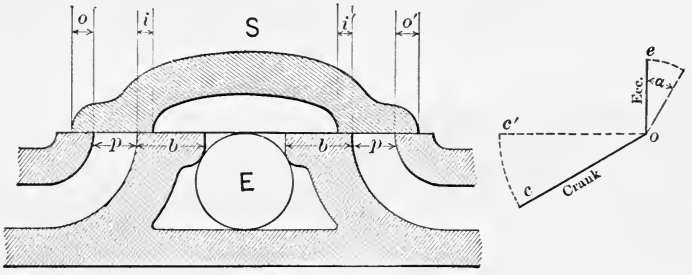

FIG. 59.

The slide-valve controls the admission of the steam automatically, cutting it off after a certain percentage of the stroke has been passed by the piston, opening a relief or exhaust passage at or near the end of the stroke for the escape of the steam from the cylinder during the return of the piston. Near the end of the return stroke, complete escape of steam is prevented by closing up the passage used for exhaust. The consequent compression of the steam in the cylinder serves as a cushion and tends to prevent pounding.

Valve Laps.—The amount the valve overlaps the outside edge of the port when the valve is in its *midposition* is outside lap (see Fig. 59, *o*, *o'*). Similarly the amount the valve overlaps the inside edge of the port when the valve is in its *midposition* is inside lap (see *i*, *i'*, Fig. 59). In its motion to and fro it is evident that the valve overlaps the ports both inside and out varying amounts. But any valve has but one *midposition* in each stroke, hence inside and outside laps are fixed quantities for any valve and can only be reduced by chipping or planing off the valve and thus reducing *o* or *i*.

It is not practical to draw the whole engine for each illustration, hence to the right of each figure are line sketches (not to scale) showing the relative crank and eccentric positions for any valve position.

When the entering steam occupies the space *S* the outside lap is called steam lap and the inside lap is exhaust lap. These names are reversed if the entering steam occupies the space *E*. It is not necessary for the steam laps to equal one another and the exhaust laps may be unequal, zero, or negative.

Throw of the Eccentric (Fig. 59).—The eccentric *Oe* being directly connected to the valve it is evident if the former be

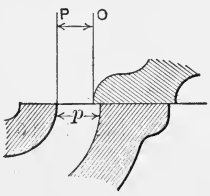

Fig. 60.

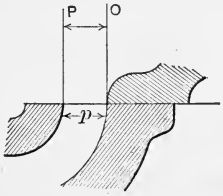

Fig. 61.

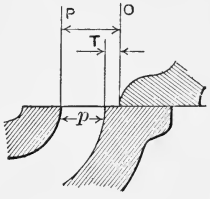

Fig. 62.

rotated from its present midposition to a horizontal position that the valve would move a distance *Oe* to the right or left in accordance with the direction of rotation. From an inspection of the figure we see that the valve must move the outside lap, *o*, to bring the valve and port edge and edge and any further movement will be called *port-opening*. The *throw* of the eccentric must equal the *lap* + the *maximum* port-opening. High-speed engine-valves are designed with considerable over-travel, as *TO*, Fig. 62, is called.

Lead is the amount in inches that the port is open when the piston is at the beginning of its stroke. Examining Fig. 59, we see that, as the exhaust lap is always less than the steam lap, any movement of the valve to open one port to steam will open the port on the other side of the piston a greater amount. Hence exhaust lead is always greater than steam lead.

We may now follow the crank through one revolution.

Width of Port and Port-opening.—By the width of the port is meant the invariable breadth of the port at the valve-seat, or p in Fig. 60. The maximum port-opening PO may be less than, equal to, or greater than the width of the port p, Figs. 60, 61, and 62.

Fig. 63: Crank OC on the dead-center, head end; piston P is at the beginning of its stroke; the left port is open the amount of the steam lead; the right port is open the amount of the exhaust lead; the eccentric is at some angle, *coe* (to be determined in amount later), ahead of the crank, i.e., in the direction of rotation.

Fig. 64: The eccentric has moved to its extreme right-hand position; the left port has its maximum opening to steam; the right port has its maximum opening to exhaust; the piston has moved to the right to its position, P.

Fig. 63: We turn to the first figure and note the *dotted* positions of crank and piston. The valve is moving to the left and is about to cut steam off from the left side of piston P'.

Fig. 65: The piston is at the end of its forward stroke to the right and is at the beginning of its stroke to the left. The right-hand port is now open the steam lead and the left port is open the exhaust lead.

Fig. 66: The eccentric and valve are in *midposition* twice in a revolution. Both ports are closed. The steam is expanding on one side and is being compressed on the other. The kinetic energy of the parts keeps up the motion. Note the position of crank and piston for the midposition of the valve.

Practical Considerations.—If the steam-pressure is the same at the two ends of a pipe there is no motion of the steam. To secure velocity, there must be a difference of pressure and to secure high velocity the difference becomes considerable. If the port

opening is small the steam often has to flow at velocities of 6000 to 20,000 feet per minute to fill the volume behind a rapidly moving

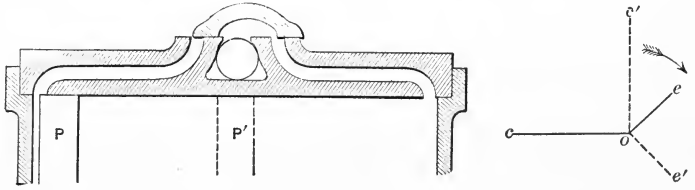

FIG. 63.

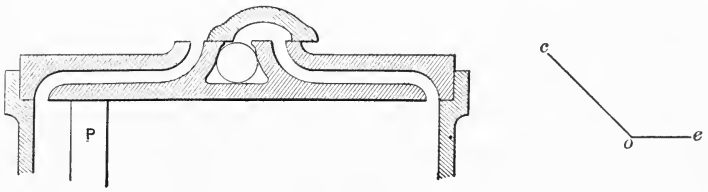

FIG. 64.

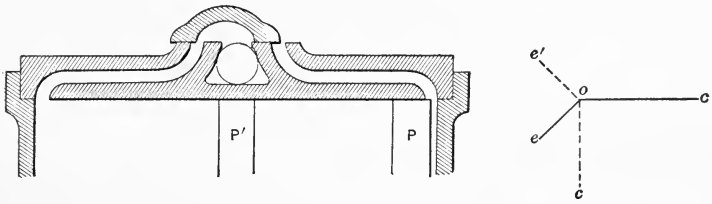

FIG. 65.

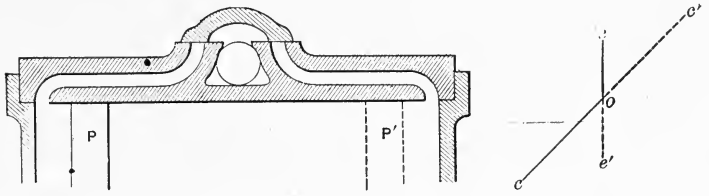

FIG. 66.

piston. This necessitates an appreciable difference in pressure between the steam in the cylinder and that in the steam-chest.

This explains the rapid falling off of steam-pressure at cut-off in high-speed engines.

The following values will give approximate idea of the amount of steam lead given to engines. Experience will show that these values may be modified to suit other conditions.

Diameter of Cylinder.	Steam Lead.
8″ to 20″	1/32″
20″ " 30″	3/64″
30″ " 40″	1/16″

Angular Advance.—Fig. 63: If the eccentric were in mid-position, *oc'*, Fig. 63, when the piston was at the beginning of its stroke, steam could not enter the cylinder as the valve would be in midposition. Keeping the crank and piston stationary we must move the valve to the right a distance = steam lap + steam lead. To do this we must rotate the eccentric ahead of the 90° position some angle, α, such that $r \sin \alpha$ = steam lap + steam lead. This angle, α, marked *c'oe* in Fig. 63 or *DOE* in Fig. 67 is called the ANGULAR ADVANCE. Fasten the eccentric to the shaft $(90° + \alpha)$ ahead of the crank. If the eccentric rod and valve-stem are the correct length the valve will be properly set.

Amount that the Valve has Moved from its Midposition.—If the eccentric was fixed at *E*, Fig. 67, when the crank is on the

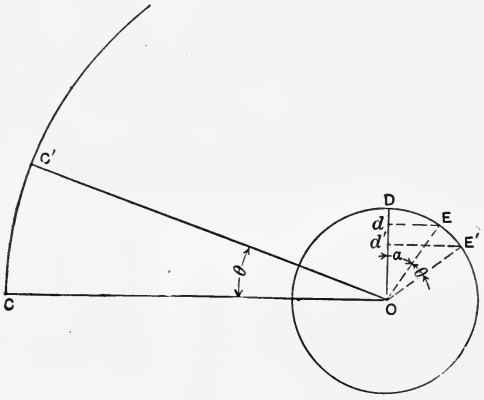

FIG. 67.

dead-center *OC* the valve has been moved $Ed = r \sin \alpha$ = lap + the steam lead from *its midposition*. If the crank rotates through

an angle, θ (carrying the eccentric through the same angle, as the eccentric is fixed now to the shaft), the eccentric will be found at E', the valve having moved $r \sin(\alpha+\theta)$ *from its midposition.*

The student should draw the crank and eccentric in various positions and find the corresponding positions of the piston and valves as in Figs. 63–66.

Valve-diagrams.—In the discussion on valve-diagrams the student must keep clearly in mind:

1. When the crank is on the dead-center the piston is at the beginning of its stroke and the ports are open the amount of the steam lead on one side of the piston and the amount of the exhaust lead for the other port on the other side of the piston.

2. The eccentric is ahead of its midposition an angle α of such magnitude that $r \sin \alpha = \text{lap} + \text{the lead}$.

3. The angle α is invariable, the eccentric being keyed to the shaft $(90° + \alpha)$ ahead of the crank; so that if the crank rotates θ degrees from its dead-center the eccentric rotates the same angle. Hence the eccentric is $(\alpha+\theta)°$ from its midposition, thus placing the valve $r \sin(\alpha+\theta)°$ from its midposition.

4. Referring to Fig. 59 we see that if we subtract the steam lap from the amount that the valve has moved from its midposition we obtain the amount of port-opening to steam on one side of the piston, and if we subtract the exhaust lap on the other side of the valve we obtain the amount that the other port is open to exhaust on the other side of the piston.

5. Negative port-opening indicates the amount that the valve must be moved to obtain a position where the port is just about to open. For instance in Fig. 59 the valve is zero inches from its midposition; subtracting the lap gives a minus port-opening (numerically = the lap) and shows how far the valve overlaps the port. If, in that same figure, the valve is moved to the left we must consider that amount as negative if motion to the right is considered positive. Subtracting the lap then gives a larger negative quantity, which we see represents the amount of the overlap or the amount that the valve would have to be moved to just open the port.

6. Fig. 59: The opening of the central part E does not enter into the diagrams. Our only care must be to have it of such

magnitude that the valve when moved to its extreme right or left position will still give plenty of room for the steam that is exhausting from either the right or left port.

7. The engine and diagram must not be confused. In the engine, when the crank moves, the eccentric and valve also move. Once the diagram is constructed the only movable quantity is a line representing the crank, the rest of the diagram remaining stationary. The amount of motion of all the other elements of the valve is found by proper interpretation of the diagram.

Fig. 68: Assume the crank to revolve clockwise and the con-

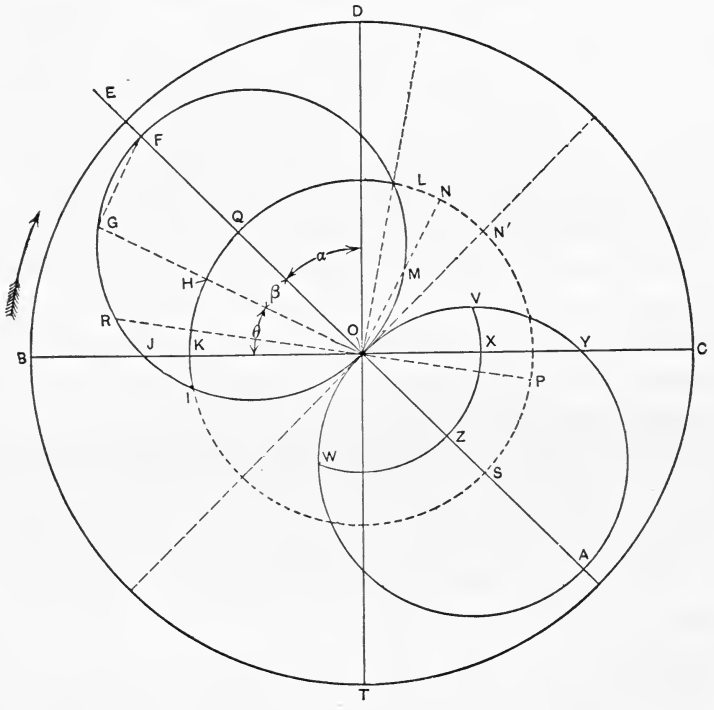

FIG. 68.—Zeuner Diagram.

necting-rod to be to the left. In the diagram lay off the angular advance, α, negatively. On OE thus obtained lay off OF = the throw of the eccentric. On OF as a *diameter* construct a circle. Let the crank rotate through any angle, θ, from its dead-center

UNIVERSITY OF CALIFORNIA

position, *OB*. Then the Zeuner diagram construction depends upon the fact that "any intercept, *OG*, of the crank-line by the valve-circle represents the amount that the *valve has moved from* ITS MIDPOSITION."

Proof. Connect *F* and *G*. *OGF* is a right angle, being inscribed in a semicircle.

$$OG = OF \cos \beta = OF \cos (90° - (\alpha + \theta)) = OF \sin (\alpha + \theta) = r \sin (\alpha + \theta)$$

But (Fig. 67) $r \sin (\alpha + \theta)$ = distance valve has moved from its *midposition*.

To the same scale lay off OK = the steam lap and draw the lap circle *IQL*. In the diagram many of the crank lines next mentioned are not drawn, as it would confuse the diagram.

On the dead-center postion *OB* the port is open JK = the steam lead.

In the crank position *OE* the port is open the maximum amount *FQ*, as the port-opening decreases with further rotation of the crank.

In the position *OL*, steam has been cut off, as the port-opening has been decreasing and is now zero.

In the position *ON* the valve overlaps the port *MN*.

In the tangential position *ON'* the valve is zero distance from its midposition or is in its midposition.

In the position *OP* the valve overlaps the port *PR*.

In the position *OS* the valve is at its maximum distance towards the left and overlaps the port by the lap + the eccentric throw = *SF*. The right port is consequently widest open. In each of the above cases the position of the left edge of the steam-valve is the one described.

When the throw and angular advance have been determined for one end of the valve from the data, necessarily, they are determined for the other end of the valve, as there is only one eccentric having a fixed throw and a fixed angular advance. As the throw and angular advance of the eccentric are fixed there is no reason why the lower circle (of the same diameter) constructed on the prolongation of *OF* should not serve to indicate the openings of the other steam-port for the other side of the

piston for the return-stroke. Lay off the proper steam lap and proceed as before.

Returning to the position OL we see, by referring to Fig. 68, that the valve is moving to the left (although the piston is moving to the right, the crank not having reached the right dead-center yet). When the crank reaches the tangential position ON' the valve is in its midposition. The left port, or head end, is now closed by the amount of the exhaust lap and any further movement to the left reduces the overlap. Now movements to the left of the central position are measured by intercepts on the lower valve-circle. Therefore describe the arc VW with a radius OV = the exhaust lap on the left side of the valve. From consid-

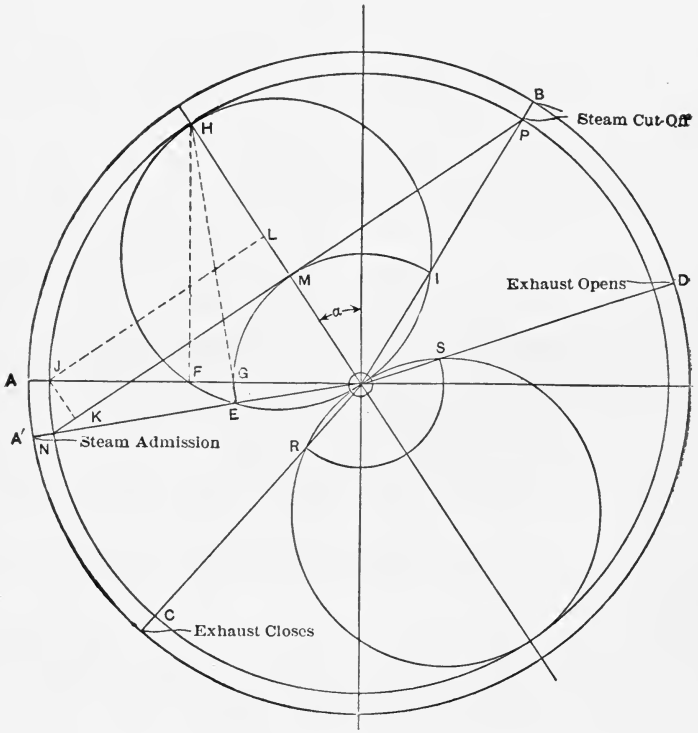

FIG. 69.

erations similar to those that have preceded we see that when the crank has rotated from the position OB to:

OV, the exhaust-port on the left side or head end is just about to open.

OY, that the port is open the exhaust lead to permit the return-stroke.

OA, the exhaust-port has its maximum opening.

OW, the exhaust-port has closed and compression of the steam that has not escaped commences.

By drawing an arc with a radius equal to the exhaust lap of the right side of the valve on the upper circle, in a similar manner the exhaust events for the right side of the piston or crank end of the cylinder may be indicated.

Geometrical Relations of Elements of the Zeuner Valve Diagram.—Suppose the diagram drawn (Fig. 69. Draw a crank-circle of any radius *OA*, it will represent the crank-circle to some scale. Then

1. *OH* bisects *A'OB* and *COD*.

2. *HFO*, *HEO*, and *HIO* are right angles, being inscribed in a semicircle, *HE* and *HI* are tangents to the lap circle.

3. Draw a circle *NHP* with *OH* as a radius; join the intersection *N* and *P* of this circle with the two crank positions, steam admission and steam cut-off; the line *NP* so drawn is tangent to the lap circle.

4. Drop the perpendiculars *JL* and *JK*, then *JK* = *FG* = the steam lead.

In the following problems assume an infinite connecting-rod:

Ex. 25. Throw of eccentric = $1\frac{1}{2}''$, angle of advance = 30°, steam lap = $\frac{1}{2}''$, exhaust lap = $\frac{1}{4}''$. Find the angle at which steam is admitted and cut off, and the exhaust opened and closed; the steam lead, exhaust lead, and maximum opening of the port to exhaust.

Ex. 26. Stroke is 4', steam is cut off at $\frac{3}{4}$ stroke, and is admitted at 1" before the beginning of the stroke, the exhaust is opened at 3" before the end of the stroke, the throw of the eccentric is 2"; find the proper angle of advance, the steam and exhaust laps, and the point on the stroke when the exhaust closes.

Ex. 27. Stroke is 3', steam is cut off at 27", steam lead is $\frac{1}{4}''$, the exhaust closes at 30" from the beginning of the stroke, throw of the eccentric is $1\frac{1}{2}''$; find the maximum port-opening to steam and exhaust, and position on the stroke when the exhaust opens.

Ex. 28. Given the throw of an eccentric = 2", the external lap =

$\frac{3}{4}''$, steam lead $=\frac{1}{4}''$, exhaust lap $=-\frac{1}{8}''$ (negative); find where the steam is cut off and where the exhaust-valve is closed if the stroke is 2′.

Ex. 29. Stroke is 2′, steam is cut off at 20″, the lead is $\frac{1}{8}''$, the outside or steam lap is $\frac{3}{4}''$, no exhaust lap; find the angular advance, throw of eccentric, and where the exhaust opened and closed.

Problem.—The amount that the port is to be open for any particular position of the crank, the position of the crank itself when the steam is cut off, and the amount of lead being known. To find the lap of the valve, throw off the eccentric, and its position with regard to the center lines of the crank.

The solution of this and the next problem are modifications of those given in "Designing Valve Gearing," by E. J. Welch. The solutions are theoretically exact if the angularity of the eccentric-rod is neglected. Practically, however, the solution depends upon the intersection of lines making a small angle with each other and it is difficult to determine the exact point of intersection.

Draw AB (Fig. 70) to represent the amount the port is to be open at the given position of the crank and lay off AC to represent the required amount of lead. From the point C draw CD to represent the position of the crank at which the steam is to be cut off from the cylinder. Draw CE at right angles to CD and AF at right angles to AB. These lines intersect at G. Bisect the angle EGF by the line GH. This bisectrix is a locus of the required center N since EG and FG are tangents to a circle whose center is N.

From C lay off CI to represent the crank position when the valve is open the required amount AB. If we draw CPL perpendicular to CI it will be tangent to an unknown circle, aGP, at some unknown point, P, where TP is the required opening at the required angle. Similarly, if we draw BW perpendicular to AB, it will also be a tangent to the same circle. The bisectrix of the angle, PLW, so formed, will be LN, which is the locus of the center of this unknown circle, and it will intersect the other bisectrix, GH, at N, the required center of the unknown circle. Draw NC and the diameter of the valve circle will be obtained.

To check the position of the point N, see that NP and NW are equal and that N lies in GH.

Problem.—The greatest amount that the port is to be opened, the position of the crank when the steam is to be cut off from the cylinder, and the amount of lead being given. To find the lap of the valve, the throw of the eccentric, and its position relative to the center line of the crank.

Draw AB (Fig. 71) to represent the greatest amount that the

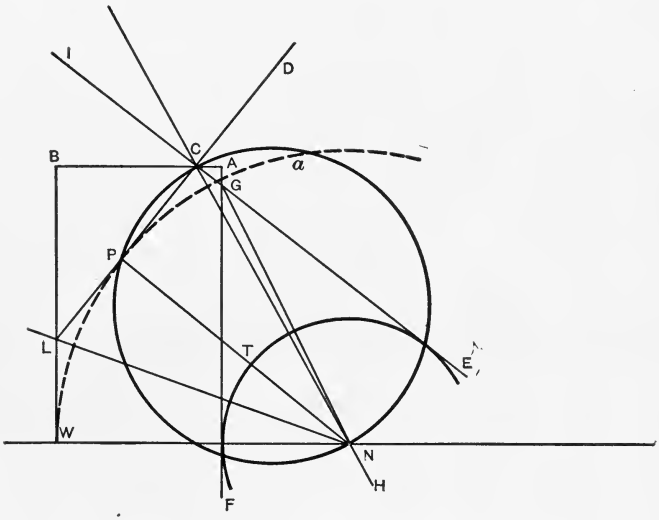

FIG. 70.

port is to be opened and lay off AC equal to the given lead. Draw CD to represent the crank-angle at cut-off. A perpendicular to CD at C and a perpendicular to AB at A will both be tangent to the unknown lap circle. The bisectrix, GJ, of the angle EGF so formed is the locus of the point M.

Lay off GU equal to AB and erect the indefinite perpendicular HKI. Prolong the bisectrix JG till it intersects HI at some point K. In the completed but unknown figure we see that the radius PM (equal to the unknown diameter, MC, of the valve circle) is to GU as MK is to GK. Join C and K. With G as a center and GU (equal to AB the maximum port opening) as a radius draw the arc UL. Join G and L. Draw CM parallel

to GL and intersecting the bisectrix GJ at M. The triangles LKG and CKM are similar and therefore $MK:GK::CM:LG$. It therefore follows, since three terms of this proportion are the same as three terms of the preceding proportion, that the fourth terms are equal, viz., that $PM=CM$.

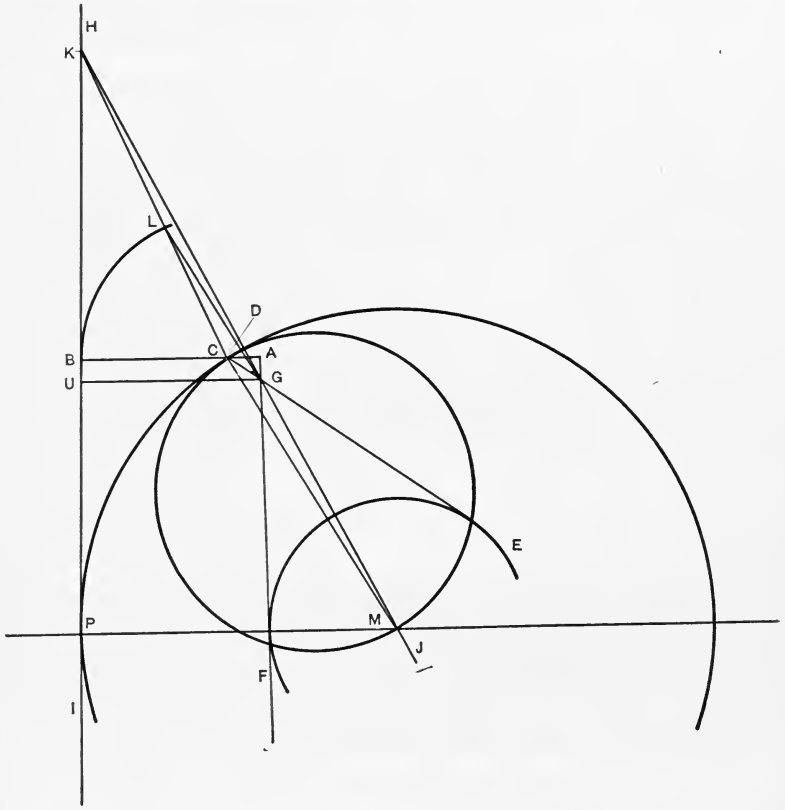

FIG. 71.

The diameter of the valve circle having been found the remaining points are easily found.

Problem.—Given ratio connecting-rod to crank = 5; steam lap 1/2″, exhaust lap 1/8″, and steam lead 1/16″ (all on head end); width of steam-ports 1/2″, throw of eccentric 1¼″; steam-pressure 40 pounds per gage, back pressure 2 pounds above atmosphere,

clearance 10%. Draw the theoretical indicator-card for the head end of the cylinder and sketch the valve when the piston is at the beginning of its stroke and again when the valve is in its extreme position to the right.

Solution.—Draw the indefinite straight line XOY. From any point O lay off OG = steam lap, and GF = the steam lead on head end; erect indefinite perpendicular FH, with O as a center and a radius = the given throw of the eccentric describe an arc cutting FH at H; draw OH, it will be the diameter of the valve-circle and HOT will be the angular advance; with a radius OG describe the lap circle EGI; with a radius = the given exhaust lap describe the arc RS; with a radius OU = lap + the width of port describe the arc UWV, then WH will be the overtravel.

With a center at O and a radius equal to the crank radius to some convenient scale, describe the crank-circle XBY; with a radius five times as great, describe the arc of the connecting-rod C_1XC_2. Draw the various crank positions, as OB, and find the corresponding piston positions such as B' by laying off BC_1 from X.

Project XY on any parallel line below the diagram and obtain $X'Y'$, the length of the card; lay off $X'Z$ to obtain the line of no volume or clearance line. Lay off the absolute pressures 40 + 15 pounds and 15 + 2 pounds and obtain the steam admission and back-pressure lines $Z'B''$ and $C''S$. Project B' to B'' and draw the isothermal expansion curve $B''D''$; project C', the position of the piston when the exhaust closes, and obtain C'' and draw the isothermal curve of compression $C''C'''$. Find the points of steam admission and exhaust-opening and sketch in the expected curves.

On a parallel line lay of 12 = steam lead; 13 = width of port; 26 = the width of valve = steam and exhaust lap + width of port.

To draw the valve in its extreme right-hand position lay off 34 = the overtravel and then 47 is the width already found. It is evident that 79 ought to be at least as wide as the other port which is exhausting through 79. If the valve is thrown into its extreme

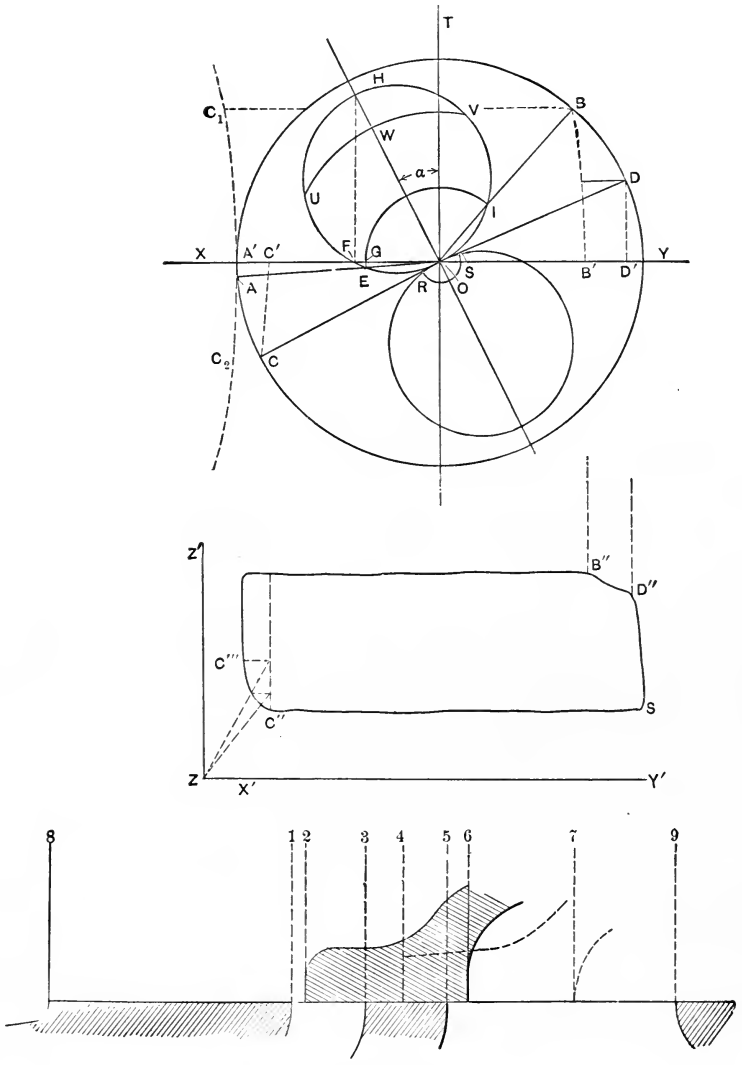

FIG. 72.

left-hand position it should go about an eighth of an inch beyond 8. This prevents the formation of a ridge at that point.

Ex. 30. If the data given in the above problem had been for the crank end, draw the indicator-card.

Ex. 31. Assume the indicator-card found in Ex. 30 for the head end and draw the crank end of the valve.

Ex. 32. Suppose that the eccentric in Ex. 30 was insecurely fastened and slips backwards (or ahead) some 30°, draw the card. What is the effect on steam admission and cut-off, exhaust-opening and compression?

Ex. 33. Diminish the throw of the eccentric $\frac{1}{4}''$ in Ex. 30, and also increase the angular advance 30°. Draw the card.

Ex. 34. Draw the indicator-card for the crank end of Ex. 29 if the valve-stem is made $\frac{1}{4}''$ too long.

There is another form of the Zeuner diagram that is frequently seen. In this form, instead of using a negative angular advance, a negative rotation of the crank is used. To illustrate this, lay off the diameter of the valve-circle of Fig. 68 to the right of *OD* α degrees and construct the diagram. To find how far the valve has moved from its midposition when the real crank has moved through an angle $\theta°$ clockwise from a dead-center *OB*, make use of an imaginary crank rotating the same angle anticlockwise from the head-center position *OC*. To find the piston positions make use of an imaginary connecting-rod that is swung from the right if the real one is on the left. Finally, when the indicator-card is found it will apparently be for the right side of the piston, when, of course, it belongs on the other side. The methods may be characterized as rights and lefts, and either may be gotten from the other by looking through the paper at the diagram instead of directly.

Bilgram Diagram.—The Zeuner diagram cannot be accurately constructed with certain data owing to the necessity of finding the intersection of lines that meet at a small angle. For instance if the position of the crank when the steam is cut off, the amount of lead, and the maximum port-opening are the data, the construction of the Zeuner diagram is complex and accuracy is difficult to

attain. There are several more recently devised methods that are better than the Zeuner in some respects. We shall prove the construction of the Bilgram diagram.

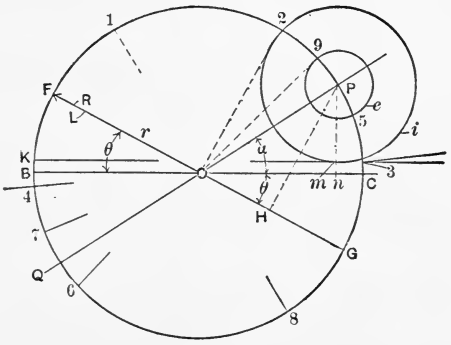

FIG. 73.

With any point O as a center and a radius equal to the throw of the eccentric describe the circle BFC. This circle is often used for the crank-circle since the scale of that circle is arbitrary. If the real engine is revolving clockwise from a dead-center position OB, lay off from the opposite center, OC, the angular advance, α, as shown and thus obtain the fixed point P. As in the Zeuner, nothing is to move but the crank. Further we must imagine that the crank has thickness and we must distinguish between the side marked R and the side marked L.

The Bilgram diagram depends upon the fact that *the perpendicular let fall from the point P (found as above) on any crank position, OF (prolonged when necessary), =the distance that the valve is from its midposition.* Call all of one side of FG by the letter R and the other side by L. If the perpendicular is dropped on the side marked R, the valve is on the right of its midposition; if it is dropped on the L side, the valve is on the left of its midposition.

Let the crank move through any angle, θ, from its dead-center position to some position OF. Drop the perpendicular PH on OF (prolonged if necessary). From the diagram we see that $PH = r \sin(\alpha + \theta)$, which we know is the amount that the valve has moved from its midposition.

As the port-opening = the distance that the valve has moved from its midposition minus the lap, it is evident that, if with P as a center and radii equal to the steam and exhaust laps we describe the circles Pe and Pi, we may automatically subtract the lap and obtain the port-opening.

As the crank rotates from the position OF to $O1$ the distance PH increases and is a maximum in position $O1$, which is perpendicular to OP.

The port-opening decreases to position $O2$, where cut-off takes place, as the valve is evidently (in this construction) moving to the left and is only the amount of the steam lap from midposition.

At OP the length of the perpendicular has reduced to zero and the valve is no distance from midposition, i.e., is at midposition.

The perpendicular now falls on the L side of the crank and increases in length, showing that the valve is moving to the left from its midposition. Opposite $O1$ or at $O8$ the valve is furthest to the left and therefore the right or crank end port is widest open.

The perpendicular is now becoming shorter, showing that the valve is returning to midposition, which it reaches in a crank position opposite OP or at OQ.

Further rotation causes the perpendicular to fall on the R side of the crank, showing that the valve is moving to the right from its midposition, and when it moves the amount of the lap the crank is in position $O4$, in the prolongation of the tangent to the lap circle position $O3$, and the valve is about to open the port.

Further rotation brings the crank to the dead-center OB and the diagram shows the port open the amount of the steam lead mn. The locus of the point H is a circle drawn on OP as a diameter.

By referring to Fig. 59 it will be seen, if the valve has no exhaust lap, that exhaust-opening takes place for the head end when the valve attains midposition in its motion towards the left and the exhaust closes again in the midposition of the valve on its return to the right. In Fig. 73 when there is no exhaust lap, exhaust-opening takes place for the head end in crank position OP and exhaust-closure in position OQ.

The effect of giving positive exhaust lap is to delay the opening and hasten the closure of the port as compared to the effect of no lap. Hence, if there is positive exhaust lap, Pe, exhaust-

opening will take place in crank position $O5$, whilst exhaust-closure will take place at $O6$, which is ahead of OQ, where compression would have commenced if there had been no exhaust lap.

These effects must be reversed if the exhaust lap, Pe, is negative instead of positive. In that case opening would take place at $O9$ and closure at $O7$.

Piston positions must be determined as in the Zeuner diagram by the use of arcs having the length of the connecting-rod as a radius.

To obtain the effects on the crank end, the point Q, opposite P, must be used as the center of the lap circles since the angular advance and throw of the eccentric are fixed quantities. The laps and leads may be the same or different from those on the head end. The effect of changes can only be determined by finding first the crank position of important events and then determining the corresponding piston positions. If the laps are the same on head and crank ends, the piston positions of steam admission and

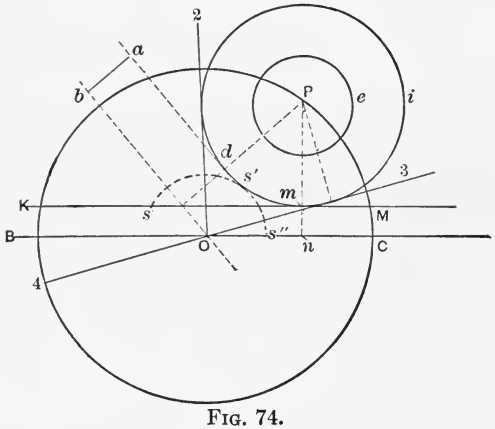

FIG. 74.

cut-off, exhaust opening and closing, will be different at the two ends.

An examination of the fundamental principles of all forms of slide-valve diagrams will show that they depend on laying off the angular advance on one side or the other of either a vertical or a horizontal line and the measurement of a perpendicular.

Geometrical Relations.—The construction of the diagram from data to find other quantities requires a comprehension of the geometrical relations that exist between principal lines in the complete figure.

The radius of the circle *KPM* is always the throw of the eccentric, *mn* is the amount of the steam lead (Fig. 74).

The angle *POC* is always the angular advance laid off with an opposite rotation from the dead-center opposite that of the real crank.

The lead line *KM*, steam cut-off line *O*2, steam admission line *O*4 prolonged, and a line *ad* drawn parallel to any crank position *Ob* at a required amount of port-opening *ab* for that crank position are all tangent to the steam-lap circle. The locus of the center of the lap circle must be the bisectrix of the angle between any two such tangents. The intersection of any two such loci gives the required center *P*. A similar series of tangents may be drawn to the exhaust-lap circles.

Ex. 35. Apply the Bilgram diagram to the solution of Exs. 25 to 29.

Ex. 36. Stroke is 2′, steam cut-off at 20″ from the beginning of the stroke, steam lead $\frac{1}{4}$″, valve is to be open $\frac{3}{4}$″ when crank has made an angle of 30° from the beginning of its stroke.

Ex. 37. Stroke is 3′, steam lead is $\frac{1}{4}$″, steam cut-off at 24″, exhaust opens 15° before the beginning of the return-stroke and closes 30° before the end of the return-stroke; find the angle of advance, throw of the eccentric, and inside and outside laps.

Ex. 38. Stroke is 2′, steam is cut off at $\frac{3}{4}$ stroke, maximum port-opening is 1″; find the throw of the eccentric, angle of advance, and the outside lap.

Problem.— Draw the cross-section of a plain slide-valve to comply with the following conditions: Width of ports 1/2″; overtravel on the head end 1/4″; cut-off on both head and crank ends 3/4 stroke; stroke 18″; steam admission commences on head end when the piston is 1/4″ from the end of its stroke; exhaust opens at 9/10 stroke on both ends; ratio of connecting-rod to crank = 5; initial steam-pressure 60 pounds absolute; back pressure 15 pounds absolute; clearance on each end 10%. Assume thickness of cylinder parts as 3/4″.

Construction (Figs. 75, 76). — Lay off the stroke XY on a scale $2'' = 1'$; draw crank-circle $X2Y$; lay off connecting-rod arc

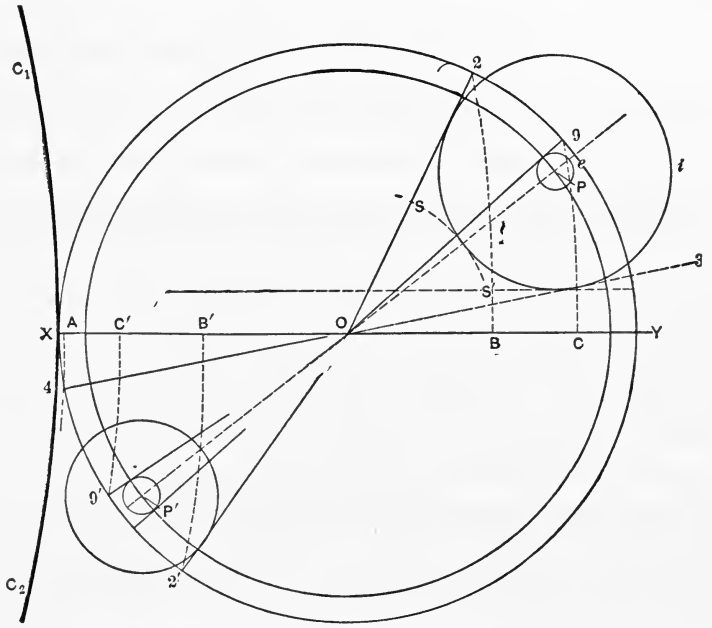

Fig. 75.

C_1XC_2; lay off cut-off points B and B' and find crank positions $O2$ and $O2'$; lay off $XA = 1/4''$ and obtain $O4$ crank position at steam admission and prolong, thus obtain $O3$, a tangent to the

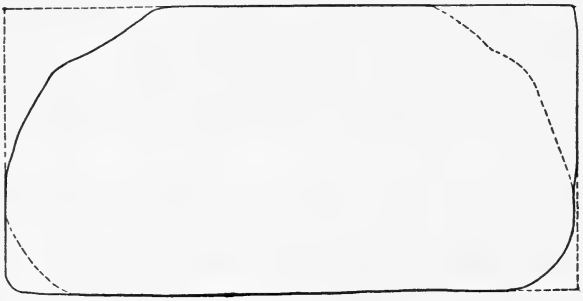

Fig. 76.

lap circle, head end; the maximum port-opening, head end, being given, lay off arc SS' with a radius = $3/4''$ = width of port + over-travel. Three conditions for the lap circle being given, ordinarily

the circle is easily drawn. In this case the locus of the center is on OP, the bisectrix of the angle 203, and it is not difficult, practically, to obtain the center P so that a circle can be drawn tangent to 02, 03, and the arc SS'. The exhaust-opening at C gives crank position 09, and as this precedes OP the exhaust lap Pe on the head end is *negative*. For the crank end, the throw of the eccentric and the angular advance (since there is only one eccentric) are fixed and, therefore, the position of P' is determined. With a center at P' draw a circle tangent to $02'$, this gives the steam

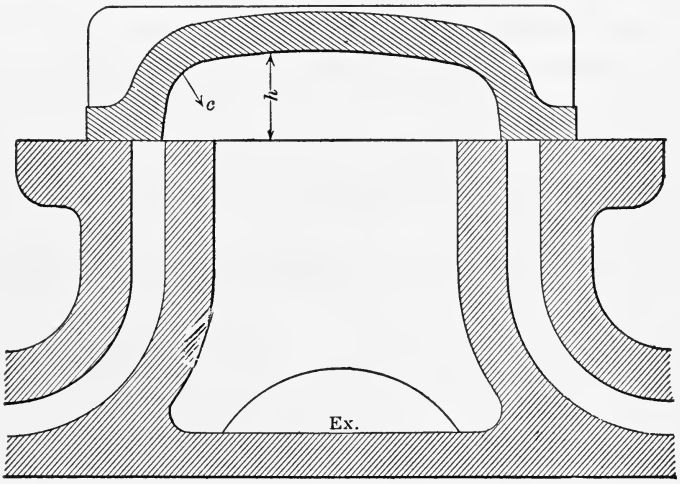

FIG. 77.

lap. Find the crank position corresponding to exhaust-opening at C' and draw the crank position $09'$ at exhaust-opening. As this position follows position OP' the exhaust lap on crank end is positive. The leads and port-openings differ considerable from those on the head end.

Dimensions of Steam-ports and Pipes.—It is easy to determine the area of a steam-port if you have enough experience to determine what lineal velocity the steam may have in any particular case without too much loss of pressure. The roughness of castings does not vary much with their size, but its influence on the velocity of steam in a passageway 1/8″ wide is enormous when compared to its effects in a passageway 4″ wide. The allowable steam

velocity will vary then with the size of the ports, their roughness, their length, and their freedom from sharp bends. We must distinguish between maximum port-opening (when it is less than the width of the port), width of the port in the valve-seat, and the width of the passageway for steam below the valve-seat.

* Formerly when engines cut off at 5/8 stroke, a lineal steam velocity of 100′ per second (=72,000″ per minute) was allowed. Nowadays 150′ to 500′ per second is allowed in obtaining the *maximum port-opening* with ordinary or usual cut-off in high-speed engines; the width of the port at the valve-seat is determined by allowing 125′ to 150′ per second, whilst the passageway, if used by the exhaust-steam on its return, is designed on an allowance of 125′ per second.

The effects of size, roughness, cut-off, and variable piston velocity are all merged in the choice of the velocity factor. Then the volume swept through by the piston in cubic inches per minute divided by the factor expressed in inches per minute = area of the port in square inches.

Let a = area of steam-port, or maximum port-opening, or area of the steam-passageway;

A = area of the piston in square inches;

L = stroke in inches;

N = number of strokes;

F = 72,000″, 90,000″, 108,000″, or 144,000″ per minute;

$$a = \frac{ALN}{F};$$

In the case of high-speed engines with shaft-governors the student will note that shorter cut-off is obtained by automatically diminishing the travel of the valve. As a result the maximum port-opening at the economical cut-off ($\frac{1}{4}$ or $\frac{1}{5}$ stroke) is so small that the factor F in many cases exceeds 360,000 inches per minute. This port-opening is often only one and a half to twice the steam lead.

A cross-section at right angles to the one shown in Fig. 59 should demonstrate that the exhaust-steam will not be choked in its exit from the cylinder. Hence the design of a cylinder should

* For a full discussion, see Trans. A. S. Naval Engrs., Vol. XVI, No. 2.

be examined to see that ample area for the passage of both live and exhaust steam into and out of the cylinder has been provided. The height, h, under the valve (Fig. 77) should be at least equal to the width of the port; a curve should be made as at c to prevent the formation of eddy-currents that would be formed with a right-angled corner. When the piston passes a dead-center, the valve will lift if much water gets into the cylinder; hence, to prevent the bending of the valve-stem its connection to the valve must be a sliding fit to permit the latter to lift off its seat. The trouble has been merely indicated to allow the student to provide suitable remedies. Steam- and exhaust-pipes should not be screwed into the castings, as the cast-iron thread is very weak and the movement of the pipes, generally having long lever-arms, soon causes leaks that cannot be stopped. Provision should be made in the design for flange connections.

Practical Considerations.

Lead.—The thickness of a pen-knife blade is enough lead for an engine up to 12 inches diameter of cylinder, 1/16″ to 1/8″ for cylinders up to 20 inches in diameter, 1/8″ to 1/4″ for cylinders up to 30 inches diameter; in large engines it often amounts to 1/2 inch or more. In some high-speed engines where the compression is very high, the lead is much reduced or made negative.

Width of Port.—In the steam-engine, heat is transformed into work at a comparatively low efficiency and, therefore, it does not pay practically to convert any of that work back into heat. It is desirable that the steam-pressure on the piston should be as near boiler pressure as possible. In very small engines the friction of the walls is a much more important factor than it is in large engines. For example, let L be the length of a steam-port and B its width in the case of a small engine and $8L$ and $8B$ similar dimensions in a large engine. Then

$$\frac{\text{Perimeter}}{\text{Area}} = \frac{2(L+B)}{LB} \quad \text{and} \quad \frac{16(L+B)}{64LB}$$

in the two cases, showing that, in so far as friction is influenced by skin-friction, the small cylinder has eight times the friction

that the larger one has. The velocity usually allowed is 6000 feet per minute. This is too high for cylinders of 6 or 8 inches in diameter and is too small for cylinder diameters of 40 inches and upwards. In high-speed engines, whilst the port may be designed for 6000 feet velocity, it will be found that, in most cases, the port is not fully opened by the valve when the engine is at normal speed. In other words, at less than normal load the port-opening is considerably less than the width of the port. As far as the valve motion is concerned, it is desirable to have a small port area, as valve friction and all valve dimensions may be diminished. In some cases the cross-sectional area of the steam-passage is increased just under the valve-seat. This increases the clearance volume and economy requires the clearance to be reduced to a minimum. As the area of the port is desired in square inches we may take the linear velocity as 72,000 inches; then 72,000 × area of port in square inches = the volume swept through by the piston in cubic inches per minute.

It is to be distinctly understood that the assumed velocity is a rate and that it is not influenced by the cut-off or the unequal piston velocities at different parts of the stroke. As the velocity rate is determined empirically, it is better to merge all small variations in that factor. The area found above is the area of *each* port and not the sum of the two ports; the cubic inches swept through by the piston is

$$\pi r^2 \times l \times s,$$

where r = radius of piston in inches;
l = stroke of piston in inches;
s = number of strokes.

Thickness of Cylinders.—The thickness of cylinder walls is governed by the necessity of providing sufficient passageways for the metal in casting and of securing sufficient rigidity in the casting at all times but especially during boring. It is of the utmost importance on account of internal shrinkage stresses that all parts of the casting be of uniform thickness whether demanded by strength or not, and that all parts making angles approximately at right angles with each other should be well filleted.

The following are given as approximations:

$t = 0.003D\sqrt{p}$ for small cylinders
$= 0.03\sqrt{Dp}$ for medium and large cylinders;
D = diameter of bore of cylinder;
p = maximum pressure in pounds per square inch.

Thickness of the Bridge between the Steam- and Exhaust-port.—In general the bridge should be the same thickness as the rest of the cylinder casting, but in every case it is necessary to put the valve at the end of its motion in each direction to see that the outside edge of the valve does not go beyond the bridge and open a direct communication between the steam- and exhaust-passages. This, of course, can occur only in valves having overtravel. There should be at least 1/8 to 1/4 inch seal between the steam- and exhaust-space under the valve at all times.

Width of the Exhaust-port.—Put the valve at the end of its travel, then the inside edge of the exhaust lap for one port should not contract the passage of the exhaust from the other steam-port.

Slide-valve Problems.—The following are all the elements that enter into slide-valve problems.

(1) Angle of advance.
(2) Throw of eccentric.
(3) $\frac{\text{Length of connecting-rod}}{\text{Crank radius}} = \frac{L}{R}$.

Crank End.	Head End.
(4) Inside lap.	(4) Inside lap.
(5) Outside lap.	(5) Outside lap.
(6) Amount of steam lead.	(6) Amount of steam lead.
(7) Amount of exhaust lead.	(7) Amount of exhaust lead.
(8) Port-opening, or width of port and overtravel (+ or −).	(8) Port-opening, or width of port and overtravel (+ or −).
The crank-angle or piston position of:	The crank-angle or piston position of:
(9) Steam admission.	(9) Steam admission.
(10) Steam cut-off.	(10) Steam cut-off.
(11) Exhaust-opening.	(11) Exhaust-opening.
(12) Exhaust-closure.	(12) Exhaust-closure.

(3) must always be given. (1) and (2) are always the same for both ends. If four elements of one end and two of the other

are given a complete solution is generally possible. Care must be taken that there is no conflict between the four elements chosen.

Valve Ellipse.—Use is sometimes made of diagrams that represent graphically the relative and actual velocities of travel of the piston and of the valve. Divide the path of the crank-pin *ABC* into any number of equal parts and, by the use of the connecting-rod, find the corresponding piston positions. At the points so found, lay off an ordinate that represents the amount that the valve is from its midposition at that time. These ordinates are readily obtained from the crank positions on the Zeuner or Bilgram diagrams when there are no intermediate linkages.

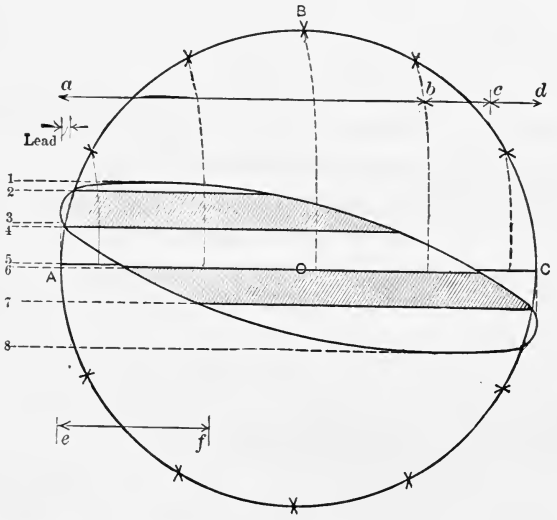

FIG. 78.

If any such exist, as in the Corliss engine, the actual position must be plotted graphically. (Fig. 78.)

Lay off 54 = outside lap;
43 = steam lead;
41 = the maximum port opening;
12 = the overtravel;
24 = exhaust-port;
56 = the inside lap;
67 = the exhaust-port opening;
78 = exhaust overtravel.

Then ab = the period of steam admission;
bd = the period of steam expansion;
cd = the period of prerelease;
ef = period of compression.

A rapid variation in the length of successive ordinates indicates rapid movement of the valve. It is desirable that a valve should open and close with the maximum possible rapidity and be practically motionless during the time that the valve is either wide open or closed, especially if there is heavy pressure on the back of the valve during such periods.

Steam-pipe.*—When steam flows through a pipe we must consider not only the properties of the steam but also that of the pipe and the influence of the surroundings or environment of the pipe.

(1) We must consider the difference of pressure between two points on the pipe line, the quality of the steam, its volume and pressure.

(2) The length and diameter of the pipe, the number and character of elbows and bends, the number and kind of valves, and the condition of the interior surface of the pipe influence the loss by friction.

(3) The covering of the pipe, whether it is in the air or underground, the character of the ground whether wet or dry, the exposure to winds, the position of the pipe and its drainage, influence condensation losses.

The heat losses, indicated above, manifest themselves in a loss of pressure and in the formation of water from the condensation of steam. The heat losses or changes may be divided into four divisions: (1) those caused by friction, (2) condensation, (3) expansion, (4) gravity.

Let E_a = initial energy at any cross-section of the pipe;
E_b = the energy at another section of the pipe;
E_f = loss of energy due to friction;
E_c = " " " condensation;
E_e = " " " expansion;
E_g = " " " gravitation;

$$E_a - E_b = E_f + E_c + E_e + E_g.$$

* For data on the flow of superheated steam in pipes see Foster in the Transactions of A. S. M. E., Vol. 28.

If W pounds are raised h feet the foot-pounds of work required will be Wh. If h be expressed in terms of velocity we have $h=\frac{v^2}{2g}$ and therefore $Wh=W\frac{v^2}{2g}$. If a cubic foot of water weighs W pounds and the cross-section of a pipe is one square foot, then to raise the water-level one foot at h feet high would require approximately a pressure of Wh pounds exerted through one foot or Wh foot-pounds. If the water-level is lowered one foot, the water at C can exert Wh foot-pounds due to its energy. This is true only on the supposition that the tube is frictionless. Hence, in practice, the issuing velocity is less than that due to a head h_1. This new head h_{11} is the head that would be required in a frictionless pipe to produce the actual velocity. The difference $h_1-h_{11}=h_f$ is then a friction head. Another way of expressing the same is as follows. The friction is proportional to v^2 (the velocity squared). By making it a proportional part of $\frac{v^2}{2g}$ we may also express it as a proportional part of the head that produces the velocity. The friction is directly proportional to the wetted surface πDL and is inversely proportional to the cross-sectional area or $\frac{\pi D^2}{4}$, or, combining these two, is proportional to $\frac{\pi DL}{\frac{\pi D^2}{4}}=\frac{4L}{D}$, or the loss of head from friction is $f\frac{v^2}{2g}\frac{4L}{D}=h_f$; hence the work of friction $Wh'=Wf\frac{v^2}{2g}\frac{4L}{D}$.

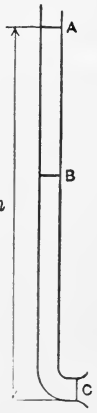

FIG. 79.

If we consider a well-lagged horizontal pipe, E_c and E_g may be neglected and E_e may be disregarded, as it represents change of the form of energy rather than its loss. Hence for this case we have $E_a-E_b=E_f=Wh_f=W\cdot f\cdot\frac{v^2}{g}2\frac{L}{D}$, where v is velocity in feet per second, L is the length and D is the diameter of the pipe in feet. Now, as a rule, we want to find the loss of pressure in pounds per square inch due to frictional losses. It requires a difference of pressure to produce a given velocity in a frictionless pipe, and

considering friction, there would have to be a greater difference to produce the same velocity.

If we took a column of the gas under consideration h_f feet high and one square foot cross-section its volume would be h_f cubic feet, and if it weighed δ pounds per cubic foot its total weight would be $h_f\delta$ and the pressure per square inch would be

$$\frac{h_f\delta}{144} = p_f \text{ pounds per square inch.}$$

$$\therefore\ h_f = \frac{p_f 144}{\delta} = f\frac{v^2}{g}\frac{2}{D}L. \quad \text{Unwin gives } f = K\left(1+\frac{3}{10D}\right),$$

where K is a constant and D is the diameter in feet.

We have therefore

$$p_f = \frac{\delta}{144}\cdot K\left(1+\frac{3}{10D}\right)\frac{v^2}{g}\cdot\frac{2L}{D}.$$

If W = weight of steam delivered per minute and v is its velocity per second,

$$v = \frac{W}{60}\frac{1}{\delta}\frac{1}{\frac{1}{4}\pi D^2} = \frac{W}{15\pi\delta D^2},$$

$$\therefore\ p_f = K\left(1+\frac{3}{10D}\right)\frac{1}{g}\frac{W^2}{225\pi^2 D^4}\cdot\frac{2L}{144D}\cdot\frac{\delta}{\delta^2},$$

and if D be changed to d inches,

$$p_f = K\left(1+\frac{3.6}{d}\right)\frac{W^2 L}{\delta d^5}\frac{1}{20.664}.$$

The following experimental determinations of K have been made:

$K = 0.0027$ for steam, Carpenter;

0.0028 for air, St. Gothard Tunnel Experiments;

0.005 for air, Arson;

0.005 for water, Unwin.

Substituting the value, $K = 0.0027$ for steam the loss of pressure is

$$p_f = 0.000131\left(1+\frac{3.6}{d}\right)\frac{W^2 L}{\delta d^5}.$$

Hence

$$W = 87\left(\frac{p_f \delta d^5}{\left(1+\frac{3.6}{d}\right)L}\right)^{\frac{1}{2}}.$$

The value 0.0027 was determined by Carpenter on pipes 1, 1½, 2, 3, and 5 inches in diameter and of 90 to 230 feet in length.

Table XIV was calculated by E. C. Sickles from the above formula, using 0.0026 as the constant. To use the table look in the left half-section of the table under the heading "Discharge in pounds per minute" for the discharge nearest to the given discharge. Then, on the same horizontal line in the right half-section under the heading "Drop in pressure in pounds, etc.," in the *column* under the given *pressure* will be found the drop in a straight pipe 1000 feet long. The heading of the column containing the nearest discharge gives the pipe diameter.

For shorter pipes containing elbows and valves, corrections have to be made. In addition, on account of the eddies formed at the mouth of a steam-pipe when it enters squarely into the steam space, a correction called the "friction of entrance" has to be made. Complex formulas have been devised for these corrections, but they are practically useless. It is customary to add (to the actual length of straight pipe) lengths whose friction would be equivalent to the friction of the piece in question.

FRICTION OF ELBOWS, VALVES, ETC.

Friction of	Equivalent Straight Pipe.
Entrance.....	60 diameters
Globe valves.....	60 diameters
90° elbows.....	40 diameters
Gate valves.....	No friction

A compound engine of 300 I.H.P. uses 18 pounds of water per I.H.P. Initial pressure is 135 pounds gage. The steam-pipe will contain two globe valves and two elbows and 90 feet of straight pipe. What will be the size of the steam-pipe and the probable drop of pressure in a well-lagged pipe?

$\frac{300\times18}{60}=90$ pounds of water per minute. From Table XIV a 4-inch pipe will supply 97 pounds of water per minute with a drop of 6.83 pounds, at 150 pounds absolute pressure, in a 1000 feet of straight pipe. The given pipe is equivalent to

Straight pipe		90 feet
Entrance	$=60\times\frac{4}{12}$	20 "
Elbows	$=2\times40\times\frac{4}{12}$	27 "
Globe valves	$=2\times60\times\frac{4}{12}$	40 "
		177 "

The drop in pressure will therefore be $\frac{177}{1000}\times6.83=1.2$ pounds per square inch.

The curves below are illuminating in that they show at a glance the rapid drop of pressure when steam travels at high velocity through small pipes. The curves are practically derived from the formula given above. They are calculated for 100 pounds absolute and 100 feet of pipe length and may safely be used up to 12,000 feet velocity and a drop of 10 pounds pressure. Within the above limits values taken from the figure may be used for other lengths and densities by multiplying the result taken from the figure by the given pipe length and given steam density and dividing the product so obtained by 22.71 which is 100 times the density of steam at 100 pounds pressure.*

Equation of Pipes of Equivalent Carrying Capacity.—While the cross-sectional areas of pipes are proportional to the square of their diameters, their carrying capacity is not so proportioned as friction will make a very considerable difference when there is a large ratio between the diameter of the pipes compared.

Let W_1 be the weight of fluid discharged by a pipe whose diameter is d_1 and W_2 be the weight discharged by a pipe of diameter d_2. Then if R is the ratio of the weights discharged

* See Gebhardt, *Power*, 1907.

by the two pipes—of equal lengths and discharging the same fluid—we shall have

$$R=\frac{W_1}{W_2}=\left(\frac{d_1{}^5}{1+\frac{3.6}{d_1}}\right)^{\frac{1}{2}}\div\left(\frac{d_2{}^5}{1+\frac{3.6}{d_2}}\right)^{\frac{1}{2}}=\frac{d_1{}^3\sqrt{d_2+3.6}}{d_2{}^3\sqrt{d_1+3.6}}.$$

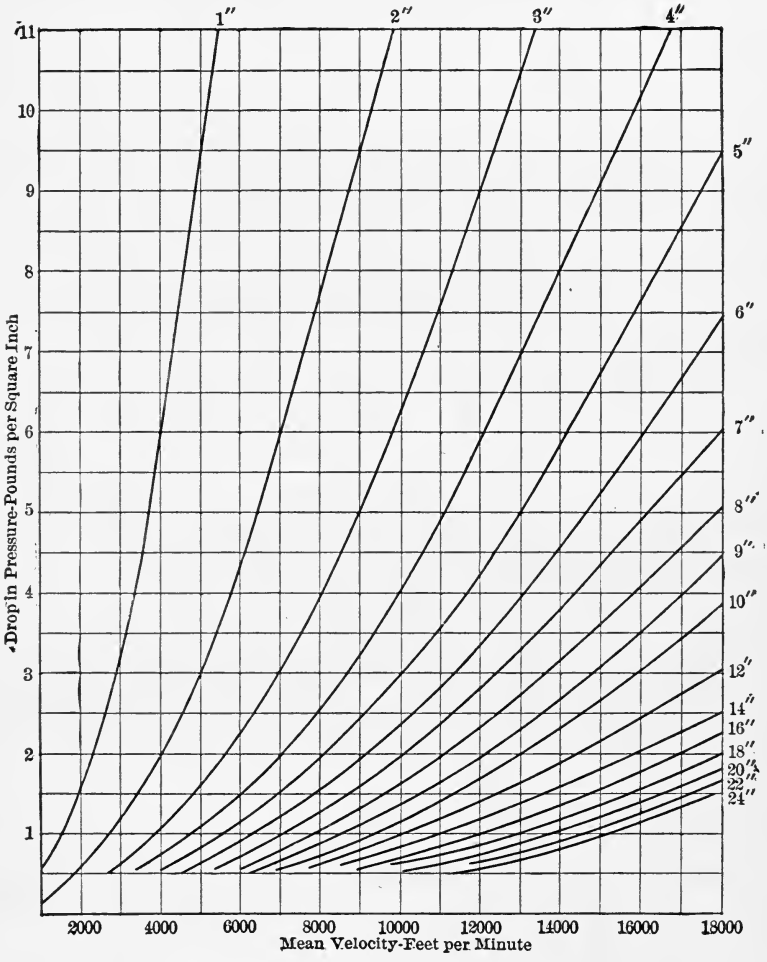

FIG. 80.—Friction Head in Steam-pipes.

From the formula we see that 43 two-inch pipes are required to equal the carrying capacity of one eight-inch pipe.

Ex. 39. How many pounds of steam initial pressure, 125 pounds gage, will be delivered per minute from a 6″ pipe, 1000′ long, with a pressure drop of 16.4 pounds?

Ex. 39*b*. What will be the loss in pressure of a pipe 6″ in diameter, 150′ long, containing 4 elbows and 2 globe valves (wide open), if the steam velocity is 8000′ per minute. Initial pressure at the boiler, 125 pounds gage.

Ex. 40. Find the size of the steam-pipe and of the steam- and exhaust-ports of a Corliss engine. Assume length of port = diam. of cylinder. Stroke = 3 diameters, I.H.P. = 45, initial pressure, 75 lbs. gage; non-condensing; cut-off $\frac{1}{4}$ stroke; revs. 94.

Ex. 41. Engine 12″ × 12″, 300 revs., I.H.P. = 100 at 100 lbs. initial pressure, and $\frac{1}{4}$ cut-off, back pressure 16 pounds absolute. Design a valve to cut off at $\frac{3}{4}$ stroke, head end, with an overtravel = $\frac{1}{2}$ width of port. Assume exhaust lap = 0. Assume length of port = 0.8 the diam. of cyl.

Ex. 42. Design the valve for the L.P. cylinder of a triple-expansion engine. Diam. cylinder is 72″, stroke 5′, revs. 75, cut-off at 0.7 stroke, steam-lead angle 15°, exhaust opens at 0.9 stroke, length of connecting-rod 15′.

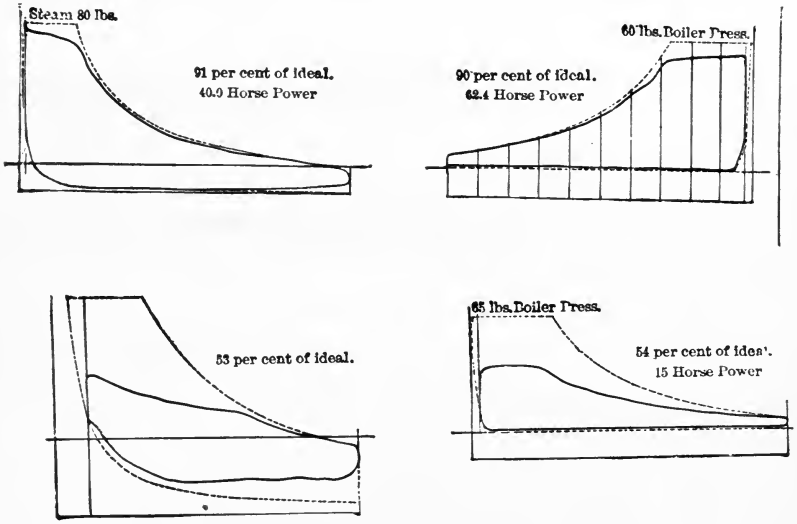
Steam 80 lbs.
91 per cent of ideal.
40.9 Horse Power
60 lbs. Boiler Press.
90 per cent of ideal.
62.4 Horse Power
53 per cent of ideal.
65 lbs. Boiler Press.
54 per cent of ideal.
15 Horse Power

FIG. 81.—Loss by Cylinder-condensation.

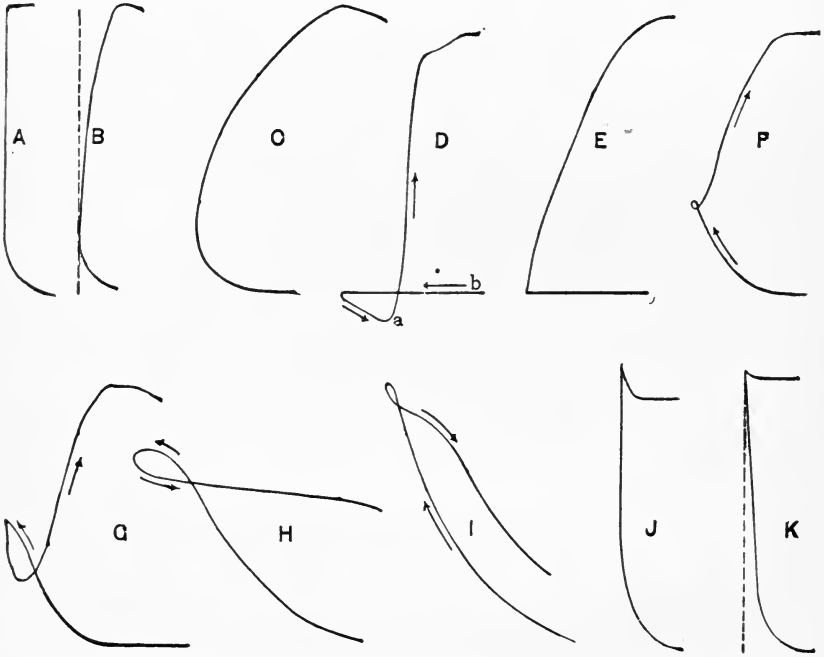

FIG. 82.—Typical Admission-Lines.

(From Carpenter's "Experimental Engineering.")

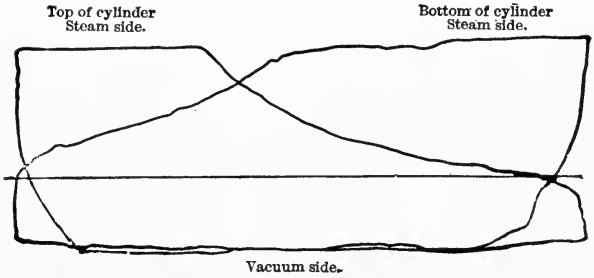

FIG. 83.—Unsymmetrical Valve-setting.

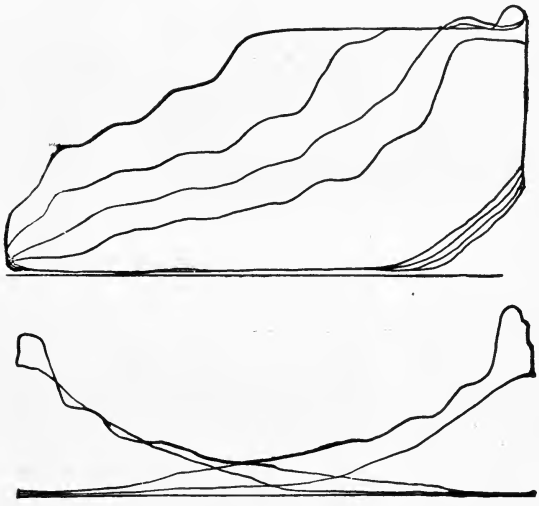

FIG. 84.—Variation of Load.

(From Carpenter's "Experimental Engineering.")

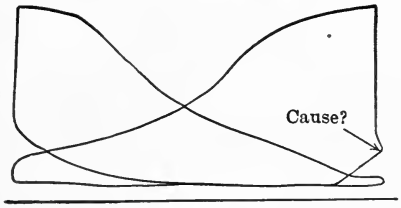

FIG. 85.

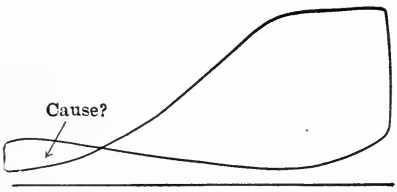

FIG. 86.

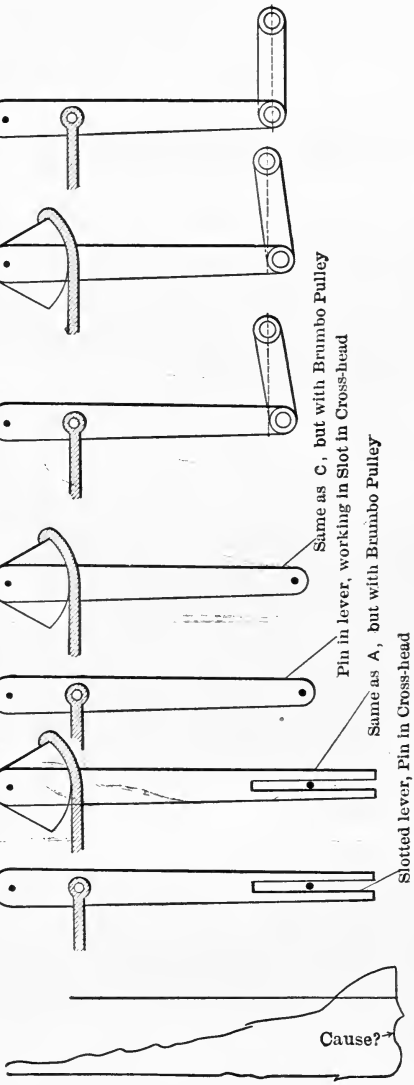

FIG. 88.

FIG. 87.

QUESTION.—Which is the most and which the least accurate mechanism?

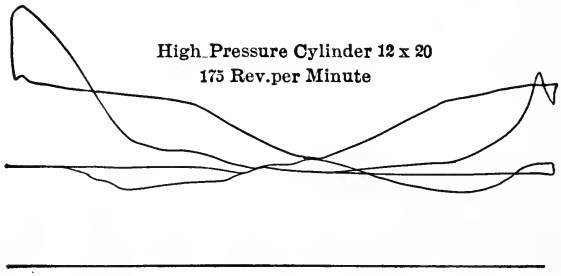

FIG. 89.

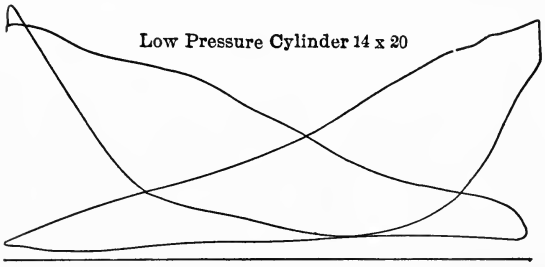

FIG. 90.

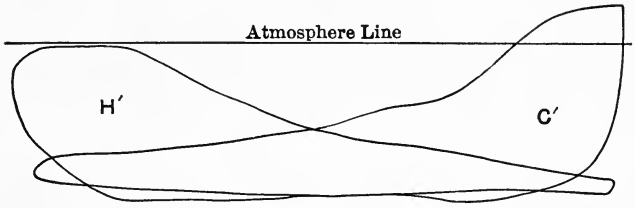

Before the trouble was located

FIG. 91.

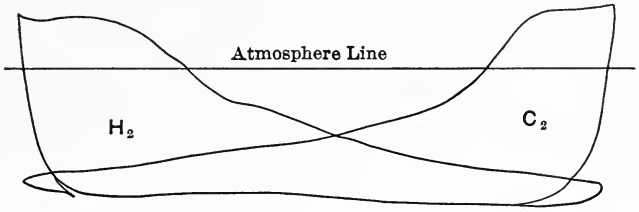

After the trouble was located

FIG. 92.

QUESTION.—What caused the defects in indicator diagrams, Figs. 89 and 91?

CHAPTER V.

MEASURING THE EFFECTS OF HEAT.

THE sensations produced by heat and its effects on bodies are matters of common experience. The hand held near the fire experiences a sensation that we say is produced by heat. The best conception of heat, however, is obtained by accurately measuring its effects. Under its influence solids increase in temperature, i.e. grow hot, usually increase in volume, diminish in strength and change many other physical characteristics such as the power of conducting heat and electricity; liquids rise in temperature, change many of their physical and chemical properties, and finally evaporate.

In heating bodies the rise of temperature does not continue indefinitely but ceases for solids when they commence melting and for liquids when they commence boiling. When solids are heated, the increasing rapidity of vibration of the molecules is shown by the increasing temperature; the length of the path is very slightly altered, as is shown by the very slight change in volume. At the melting-point, the rapidity of vibration is so great that the molecular attraction is at the point of being overcome and any further addition of heat cannot increase the rate of vibration, as the molecular attraction cannot oppose the increased stress; consequently the temperature remains constant and all the heat is spent in disgregation work. The energy of vibration is kinetic; the heat producing change of state or disgregation work is then stored up as potential energy. Similarly when liquids are at the boiling-point, all the heat added is spent in overcoming the molecular attraction, giving increased amplitude to the molecular paths and performing the external work inseparable with increasing volume. Hence as in the case of melting solids, this heat is stored up and

is potential energy. It is called latent heat or concealed heat, since it is not indicated by a thermometer.

All bodies at any temperature above absolute zero possess heat. This means, in accordance to the modern theory, that their molecules are in a state of vibration more or less rapid, depending upon the temperature of the body.

In solids the mutual attraction of the molecules generally limits all movements to fixed paths. Hence, in general, solids retain their form and mass at ordinary temperatures. An exception must be made in the case of such solids as musk, camphor, arsenic, and ice, which may evaporate at ordinary temperatures.

In liquids the motions of the molecules have been compared to that of dancers in the Virginia reel. Their motion is vibratory, rotatory, and progressive. The molecules revolve around one another, pick up a new partner as the old one is released, and revolve about the new one in turn. This free motion allows the liquid to assume a plane upper surface and the form of the vessel.

No gas is absolutely perfect, but dry air, oxygen, nitrogen and hydrogen, at ordinary atmospheric temperature and pressure, are so far ABOVE the temperature at which their liquids boil that they act like perfect gases. Substances that are liquid at ordinary temperatures are converted by heat into vapors or imperfect gases. Steam, for instance, is an imperfect gas. By superheating, however, a stage is reached where it practically follows the law of perfect gases.

Liquids may be converted into the gaseous condition in two ways that are often confused but which are really very different from one another. Any liquid if left exposed to the atmosphere will finally evaporate. Clothes will dry in freezing weather. This evaporation will occur at any temperature, although usually there is a lower limit. For mercury, for instance, this is 14° F.

Let us consider the evaporation of the water from a pan in the open air. Rapidity of evaporation will be secured—

1. By increasing the evaporating surface,—putting the water in two pans;
2. Changing the air frequently over the pan,—by fanning the air;

3. Performing the experiment on a dry day rather than on a wet one;
4. By heating, but not necessarily boiling, the water.

The truth of the above may be demonstrated by experiment. To perceive why they are true we must keep in mind the motion of the molecules in a liquid as described above. In its vibratory, rotary, and progressive motion, at intervals, at the surface all of these movements, at the same instant, may be in one direction only. If that total motion in one direction takes the molecule out of the liquid with sufficient energy, it may move out into the air instead of falling back into the liquid. The gradual loss of molecules from the surface in this manner is evaporation.

At the same temperature and pressure, dry air is heavier than moist air (see Table VI), hence the water molecule tends to rise till the temperature or the pressure or both are lowered, when equilibrium will be established. The hotter and drier the air the more rapid the evaporation. Usually this process is very slow.

The usual commercial method of forming steam by boiling is a very different process, governed by very different laws. Unfortunately for clearness, the term evaporation is also generally used for this process. In this operation steam is not slowly formed at the surface of the liquid, but there is a rapid formation of steam-bubbles on the heating surface and therefore in the mass of the liquid itself.

Consider for a moment the conditions that must exist on the inside of one of these little bubbles. It is evident that the molecules of steam must impinge on the water-envelope of the bubble with sufficient energy to form a pressure that will keep the water back. The intensity of this pressure must be equal to the intensity of the steam-pressure on the surface of the water increased by the weight of the column of water vertically above the bubble. If the steam-pressure increases, it is evident that the temperature of the steam inside the bubble will have to increase, since the required vibratory energy is proportional to the temperature. Consequently with each steam-pressure there is a corresponding steam-temperature necessary for boiling.

In the power of increasing the length of the path of vibration

gases differ essentially from liquids. Hence the volume of a gas increases to completely fill an enlarging volume, whereas the volume of a liquid remains practically constant under the same circumstances.

In the gaseous state, the attraction of the molecules for one another is extremely slight. The molecules are in incessant motion in straight lines, striking one another and the containing envelope, thus producing the pressure that they exert on the enveloping vessel.

When they strike one another (if they do), they rebound without loss of energy. We are much interested in what happens when they strike the envelope.

1. If the latter is at the same temperature as the gas, it is also in a state of vibration and the molecules will rebound without loss of energy.

2. If the envelope is cooler than the gas, some of the energy of the molecule will be communicated to the envelope, which is, probably, losing heat by radiation, and the molecule will rebound with diminished energy.

3. If part of the envelope is movable and (as a result of all the combined instantaneous impacts) motion ensues, the rebound will be with diminished energy as part of the energy is consumed in producing the motion against a resistance. When the molecules rebound with diminished velocity it indicates a lowering of temperature, viz., a loss of heat.

It is of great importance to comprehend fully these effects as they explain how steam loses heat in doing work against a moving piston in a steam-cylinder. Anything that tends to reduce the sum total of molecular velocities means a loss of heat, viz., a lowering of temperature. If the piston moves and the temperature of the gas (and therefore the heat in the gas) is kept constant, heat must be added (equal to the work done) from some external source of heat.

Heat cannot be expended without an equal quantity of energy appearing in some other form. If the heat equivalent of each elementary change is known, then the total heat expended will be the sum of the heat-equivalents. Every heat-unit that disappears as heat must be balanced by the production of some

change of equal thermal value. In the less complex cases less heat is required, the decrease being equal to the heat-equivalent of the changes that did not take place.

We saw above that when the molecules of a gas were allowed to do work they rebounded from the surface that yielded to their bombardment with less velocity than from an unyielding surface whose molecules are vibrating in unison with the gas, i.e., possessing the same temperature. If a gas does external work, it loses heat equivalent to the external work done. If work is done on the gas, then the gas gains heat equal to the external work done on it.

It is important to keep in mind that the difference between

1. The total heat *required* to heat a substance from one temperature, t_1, to another temperature, t_2, and

2. The increase of the amount of heat *in* a substance when heated from t_1 to t_2

is always the external work.

Let us take the most complex case possible and itemize every source of heat-expenditure. Heat a solid to the melting-point, melt it, heat the resulting liquid to the boiling-point, evaporate it, and heat the vapor under ONE of several sets of conditions. The exceptions to the events as stated below are of little importance to the student at present. These events are:

1. Temperature of solid rises.
1_a. It expands against external pressure.
2. Temperature remains constant, but melting is taking place.
2_a. Expansion against external resistance.
3. Temperature of liquid rises.
3^a. Liquid expands against external resistance.
4. Temperature remains constant till all the liquid is evaporated.
4_a. Change of volume against external resistance.
5. Temperature and pressure increase, the volume remaining constant;

or 5′. Temperature increases, pressure remaining constant;
5_a′. Volume increases against constant external pressure;

or 5″. Temperature increases;

$5_a''$. Volume increases against varying pressure;

or $5'''$. Temperature constant, volume and pressure varying.

A careful examination of this apparently complex series of events will demonstrate that they may all be grouped under three heads, each of which is absolutely *elementary* in its nature. Heat is expended to produce

(*a*) A rise of temperature: 1, 3, 5, or $5'$, $5''$—kinetic energy.

(*b*) A change of state: 2, 4—potential energy.

(*c*) External work: 1_a, 2_a, 3_a, 4_a, or $5_a'$, $5_a''$, $5'''$—mechanical energy.

The heat required to produce any one of these events is not used to do two things. For example, when a substance is heated a few degrees we see that there is not only a rise in temperature, but also that the substance either expands or contracts. What is meant by (*a*) is the heat that, theoretically, is required to produce the rise of temperature alone.

When solids, liquids, or gases expand the external work is equal to the product of the increase in volume in cubic feet multiplied by the mean pressure (in pounds per square foot) (page 30) that resisted the expansion. This product is foot-pounds of work, and divided by 778 will give its equivalent in thermal units.

The expansion or contraction of a substance when heated may always be measured without reference to any other heat quantity. Hence the (*c*) events may always be found directly. Then, when there is a combination of any *one* (*a*) or any *one* (*b*) event with its corresponding (*c*) event, it is evident that, by measuring the total heat required to produce the two simultaneous events, the value of the (*a*) or the (*b*) event alone may be found by subtracting the heat equivalent to the external work or (*c*) event from the total measured heat.

Physicists, by careful measurements and determinations, have found the heat necessary for the (*a*) and (*b*) events for one pound (or unit weight) of most substances and tabulated the results. By proper use of these tables we may calculate the quantity of heat required in the most complex cases.

Specific Heat.—Different amounts of heat are required to raise equal weights of different substances through one degree rise of temperature. If a body expands, some external work

is done equal in amount to the pressure per square foot that was acting on the body multiplied by the change of volume in cubic feet divided by 778, or $\frac{PdV}{778}$. The change of volume of solids and liquids on being heated is so slight and the heat equivalent to the resultant external work is so minute that it may be neglected.

Let h = total heat to raise 1 pound through 1° F.;

s = heat required to raise the temperature alone = change of intrinsic energy = change of heat as heat in the body;

i = heat expended in overcoming the molecular attractions = disgregation work = work done incident to change of state;

e = external work due to change of volume under pressure;

$h = s + i + e$ (B.T.U. per pound).

In the case of solids and liquids not only is e very small, but i is practically zero except close to the melting-point of solids and the boiling-point of liquids. Hence, in engineering questions, the heat required per pound per degree rise in temperature of solids or liquids is that required to increase their sensible temperature alone.

The amount of heat required to raise one pound of water one degree Fahrenheit, called a British Thermal Unit, or B.T.U., is adopted as the unit, since, from experiment, we know that more heat is required to increase the temperature of one pound of water one degree than is required by one pound of any other substance except hydrogen gas. See page 5.

The Specific Heat of Solids and Liquids (C) is that fraction of a B.T.U. that is required to raise the temperature of one pound of a substance in either of those states through one degree Fahrenheit. Hence to raise W pounds from t_1° to t_2° requires

$$W \cdot C \cdot (t_2 - t_1) \text{ B.T.U.}$$

Specific Heat of Gases.—We must distinguish between perfect and imperfect gases. Vapors are imperfect gases which on the addition of heat become more perfect and eventually may be made to act like perfect gases by the addition of sufficient heat. There is no such thing as absolutely perfect gases, but the so-called

permanent gases, dry air, hydrogen, nitrogen, oxygen, which at ordinary temperatures and pressures are far removed from the conditions required by their liquids, may be termed perfect gases. Imperfect gases or vapors are not far removed from the conditions of their liquid, but may reach that state by the reception of a large quantity of heat.

In the case of perfect gases it is usual and practically correct to assume that no energy (heat) is required to separate their molecules. Theoretically the molecules, having mass, must have the mutal attraction called gravitation. This force of attraction must exist even if all other forces of mutual attraction are lost. As a matter of fact, in the condensation of the so-called permanent gases, use is made of this minute mutual attraction of the molecules. In the cases of imperfect gases, some heat is spent in overcoming molecular attraction. In the case of steam, for instance, it is now recognized that its specific heat is variable, and many scientists are now at work on the determination of the specific heat of superheated steam at various temperatures and pressures. Recent work in gas-engines leads to the conclusion that the specific heats of the gases used in those engines are not the same at high pressures and temperatures as they are at low ones. As no final conclusions have been reached, the student, in engineering problems, may assume $i=0$ for all gases perfect and imperfect.

There still remains the other factor e=external work. If solids and liquids are not allowed to expand when heated, the pressure that is exerted is equal to that which would be necessary to compress them back to the original volume had they been allowed to expand freely. These pressures are enormous. On the other hand, in the case of gases the increase of volume is considerable if the gas is allowed to expand, and it is also feasible theoretically to prevent all expansion. Practically, of course, the vessel does change volume with increase of temperature or pressure or both, but the change is relatively so slight as to be negligible.

Specific Heat of Perfect Gases at Constant Volume.—If a gas is not allowed to expand, no external work is done since work is the exertion of a pressure (against an equal resistance) through a distance. If either factor (pressure or distance) is zero, the work is zero. Mere increase of pressure, then, is not work. Hence if

i and e are both zero, all the heat applied to the gas appears as heat *in* the gas, or increase of intrinsic energy. Its sole effect is to increase the rapidity of vibration of the molecules, and this results in an increase of pressure on the containing vessel and an increase of temperature as measured by a thermometer. Hence

The Specific Heat at Constant Volume, C_v, of a perfect gas is the fraction of a B.T.U. that is required to raise one pound of the gas through one degree Fahrenheit, the volume of the gas being kept constant.

Therefore, if W pounds of a perfect gas are heated from $t_1°$ to $t_2°$ F., the heat required would be

$$W \cdot C_v \cdot (t_2° - t_1°) \text{ B.T.U.}$$

Another variation of the general rule occurs when a gas is heated and the pressure is kept constant. When one pound of a gas at constant pressure is heated one degree, the heat equivalent to the external work done is a fraction of a B.T.U. which may be added to C_v, thus obtaining a new coefficient, C_p. It is evident that the external work done by 10 pounds of gas heated 10 degrees will be 100 times as great as that done by one pound of gas heated one degree. The expenditure of heat for external work varies with $W(t_2 - t_1)$. Hence

The Specific Heat at Constant Pressure is that fraction of a B.T.U. that is required to heat one pound of a gas one degree Fahrenheit and do the external work if the gas is allowed to expand against a constant resistance. To raise W pounds of gas from t_1 to t_2 and do the external work that accompanies expansion under constant pressure requires

$$W \cdot C_p \cdot (t_2 - t_1) \text{ B.T.U.}$$

Ex. 43. In a non-conducting, non-heat-absorbing box are 30 pounds of water at 75° F. What will be the final mean temperature if 5 pounds of lead at 50° C., 3 pounds of copper at 300° F., and 4 pounds of cast iron at 50° C. are thrown into the box? (Table I.)

Ex. 44. If ½ pound of hydrogen is heated from 75° F. to 90° F. under constant pressure, how many B.T.U. are required? If the volume had been kept constant, how many B.T.U. would have been required? How many foot-pounds of external work were done in the first case?

Ex. 45. It requires 73.2 B.T.U. to heat 3 pounds of a certain gas from 60° F. to 160° F. under constant pressure, and 16571.4 foot-pounds of external work are done. What gas is it? What is the increase of heat in the gas?

Ex. 46. Two pounds of dry air at 75° F. and 20 pounds per square inch pressure are heated and cooled several times. At the end of the operations, by plotting a curve of the variations of pressure, and volume it is found that 77,800 foot-pounds of external work have been done, and that the volume of the gas has been doubled and its temperature is 475° F. How many B.T.U. were expended, and what is the increase of heat in the air?

Ex. 47. Two pounds of air under 20 pounds per square inch pressure and at a temperature of 200° F. are allowed to expand; heat is added so that, notwithstanding the fact that the gas is expanding and doing work, its temperature remains the same. If 100 B.T.U. were added to the gas, find the number of foot-pounds of external work that were done.

Heretofore we obtained our answers in thermal units by using C_p and C_v. To obtain an answer in foot-pounds it was necessary to multiply by 778. The answer may be obtained directly in foot-pounds by multiplying by the corresponding constants K_p and $K_v = 778C_p$ and $778C_v$ from Table I. The difference of these constants $(K_p - K_v)$ is a constant which will be called R.

Derivation of the Fundamental Formula, $PV = WRT$.

The truth of this formula is demonstrated by the correct results obtained by its use.

Imagine a piston of any constant weight P resting on a perfect gas weighing W pounds. Cool the gas till its temperature is reduced to absolute zero and its volume is also reduced to an inappreciable quantity. If the gas is now heated under constant pressure, it will take $W(C_p - C_v)$ thermal units to do the external work per degree rise of temperature in accordance with our definitions. If the gas is heated T degrees absolute, the heat required for the external work is $W(C_p - C_v)T$. Expressing this in foot-pounds, $W(K_p - K_v)T$, it may then be equated to the external work done under a constant pressure P through a volume V, or

$$PV = W(K_p - K_v)T = WRT.$$

In the derivation of this formula we eliminated all internal heat. It cannot be used, therefore, in the determination of quan-

tities of heat. It shows a relation that exists between *physical* conditions alone.

In its use only one quantity must be kept constant, and that is the mass of the gas. Hence for any gas if

P_1 = initial pressure absolute in pounds per square foot,

V_1 = the initial volume (in cubic feet) absolute,

T_1 = the initial temperature in degrees Fahr. absolute,

P_2 = the absolute pressure at any other instant in pounds per square foot,

V_2 = the absolute volume in cubic feet at that instant,

T_2 = absolute temperature Fahr. at that instant,

then, whether the gas was heated or cooled, whether it did work or work was done on it,

$$\frac{P_1V_1}{T_1}=\frac{P_2V_2}{T_2}.$$

In the equation $PV=WRT$ there are five quantities: if any four are known, the fifth can be found. Similarly in the equation $\frac{P_1V_1}{T_1}=\frac{P_2V_2}{T_2}$, there are six quantities; if any five are known, the sixth may be obtained. Note that P is a rate or intensity of pressure.

Ex. 47. A cylinder 1 square foot in area and 4 feet long contains oxygen at 139° F. and 100 pounds per square inch pressure absolute. What is the weight of the oxygen?

Ex. 48. A cylinder contains 1/10 of a pound of an unknown gas. The volume of the cylinder is 3.2 cubic feet, and the absolute pressure is 100 pounds per square inch, and the temperature is 139° F. What is the gas?

Ex. 49. What volume will 1/2 pound of dry air occupy at 39° F. and 50 pounds per square inch pressure?

Ex. 50. A spherical balloon, 30 feet diameter, is to be inflated with hydrogen gas at 70° F., with the barometer standing at 29.8 inches. What will be the weight and volume of the gas that should be run in, if none is to be lost when the balloon has risen to such height that the barometer stands at 20 inches and the thermometer stands at 36° F.?

Calculate the lifting-power when the balloon starts to rise.

Ex. 51. Find the temperature at which one kilogram of air will

occupy 3 cubic meters under a pressure of 5000 kilograms per square meter.

Ex. 52. A cylinder 1 square foot in area and 3 feet in height contains air at 100° F. under a piston weighing 576 pounds, exclusive of the atmospheric pressure. What is the weight of the air?

Boyle's Law.—Taking the equation $\frac{P_1V_1}{T_1}=\frac{P_2V_2}{T_2}$ for a constant mass of gas, it is evident that certain relations hold if any one of the three factors, pressure, volume, or temperature, is kept constant, allowing the other two to vary. If heat be added or subtracted so that the temperature is kept constant, we have Boyle's Law; for if $T_1=T_2$, then we have $P_1V_1=P_2V_2$ or $\frac{P_1}{P_2}=\frac{V_2}{V_1}$. Since the temperature is kept constant, $P_1V_1=P_2V_2$ must be the law of isothermal expansion. If V_2 is greater than V_1 the gas has expanded; if it is smaller, then there has been isothermal compression. The law then expresses the fact that if the temperature is kept constant, the volumes will be inversely proportional to the pressures. It is generally much easier to deal with ratios thus: if the volume is doubled or trebled, the pressure is halved or is one third of the original pressure; or if the volume is one third or one fourth the original, the pressure is three or four times the original.

Charles' Law.—If the volume is kept constant, the equation becomes $\frac{P_1}{T_1}=\frac{P_2}{T_2}$. If a gas be heated or cooled in a closed vessel so that there is no change of volume, then the pressure is directly proportional to the *absolute* temperature. Put in the form of a ratio, $\frac{P_2}{P_1}=\frac{T_2}{T_1}$, we see that doubling the pressure requires double the *absolute* temperature.

Similarly if the pressure is kept constant the equation becomes

$$\frac{V_1}{T_1}=\frac{V_2}{T_2} \quad \text{or} \quad \frac{V_1}{V_2}=\frac{T_1}{T_2},$$

and we see that the volume is directly proportional to the ABSOLUTE temperature under those circumstances.

Joule's Law.—For engineering purposes we may say that if a perfect gas expands and does no external work, the temperature

remains constant. Let us examine the effect of this on the general equation

$$\frac{P_1V_1}{T_1}=\frac{P_2V_2}{T_2}.$$

By supposition $T_1=T_2$, therefore

$$P_1V_1=P_2V_2.$$

But this is the law of expansion of a gas at constant temperature. As T_2 is practically equal to T_1, we shall assume the law to hold.

Ex. 53. The area of a piston is 2 square feet; the pressure of the air against it when it is 1 foot from the beginning of its stroke is 50 pounds. The temperature of the air is 100° F. If the air expands, doing work as the piston moves to the end of its stroke, find the final pressure of expansion, if the stroke is 4 feet and the final temperature of expansion is 100° F.

Ex. 54. The cylinder of an air-compressor is 3 square feet in area and 2 feet stroke. If this cylinder is filled with air at 15 pounds pressure and at a temperature of 60° F., what will be the final pressure of compression if the air is compressed at a constant temperature to one fourth its original volume?

Ex. 55. A cylinder contains dry air at 100 pounds pressure per square inch and at 75° F. If the area of the cylinder is 3 square feet and its length is 2 feet, find the number of B.T.U. that it will take to double the pressure, if the volume remains constant.

Ex. 56. A cylinder with a movable piston contains one half pound of oxygen at a pressure of 100 pounds per square inch absolute. If the volume of the gas under the piston is 1 cubic foot, required the number of B.T.U. to double the volume under the above pressure. What is the increase of intrinsic energy of the gas?

In using these formulas it is convenient to express the pressures in pounds per square inch. This can be done by expressing the area of the piston in square inches. All stroke dimensions must be in *feet*.

The formulas for the net work done and the mean effective pressure are very much simplified by making the clearance equal zero and closing the exhaust-valve at the end of the stroke. These simple formulas will not apply to a cylinder that has clearance, and most cylinders have clearance.

Curves of Expansion of a Gas in General.—When the volume of a gas varies—either increasing or decreasing in volume—doing work (or the reverse) and either receives or loses heat in some regular way, the relation that exists between the pressure and the volume at any instant may generally be expressed by the equation

$$PV^n = C.$$

For example, if *bc*, Fig. 93, represent the expansion curve

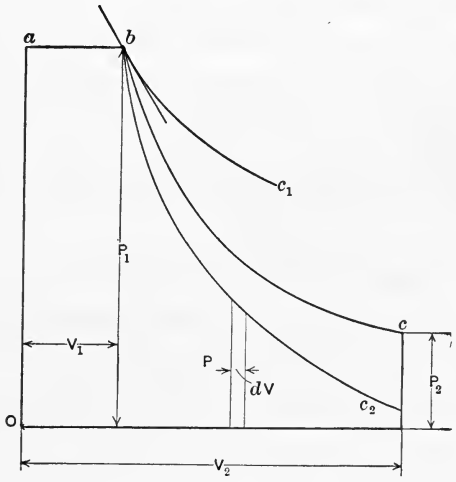

FIG. 93.

$PV^n = C$, from the point *b* draw other curves above or below *bc*. It is evident that some relation such as

$$PV^{1.3} = C, \quad PV^{\frac{1}{2}} = C, \quad PV^4 = C^2, \quad PV^{-2} = C, \quad PV^{\frac{1}{2}} = C,$$

or, in general, $$PV^n = C,$$

might exist between the absolute pressure and its corresponding volume at any instant of the expansion.

To find an expression for the *work done during expansion* when the expanding gas either receives or loses heat in such manner that the relation between the varying pressures and the varying volumes is $PV^n = C$.

Work done during expansion $= \int_{V_1}^{V_2} P dV$;

but $$PV^n = P_1 V_1{}^n, \quad \therefore \; P = \frac{P_1 V_1{}^n}{V^n}.$$

$$\text{Area} = \int_{V_1}^{V_2} \frac{P_1 V_1{}^n dV}{V^n} = P_1 V_1{}^n \int_{V_1}^{V_2} \frac{dV}{V^n} = P_1 V_1{}^n \int_{V_1}^{V_2} V^{-n} dV$$

$$= P_1 V_1{}^n \left[\frac{V^{-n+1}}{-n+1} \right]_{v_1}^{v_2} = P_1 V_1{}^n \left(\frac{V_2{}^{-n+1} - V_1{}^{-n+1}}{-n+1} \right).$$

This is readily reduced if $V_2{}^{-n+1}$ is multiplied by $P_2 V_2{}^n$ (which is equal to $P_1 V_1{}^n$) rather than by $P_1 V_1{}^n$

$$= \frac{P_2 V_2 - P_1 V_1}{-n+1} = \frac{P_1 V_1 - P_2 V_2}{n-1}.$$

This gives the work done during expansion of W pounds of gas (determined by P_1, V_1) expanding from $T_1°$ to $T_2°$ and meanwhile receiving or losing heat so that the law of expansion may be $PV^n = C$.

To express the work $\frac{P_1 V_1 - P_2 V_2}{n-1}$ in thermal units. From the general equation $PV = WRT$ we have

$$P_1 V_1 = W(K_p - K_v) T_1,$$
$$P_2 V_2 = W(K_p - K_v) T_2.$$

The work done during expansion in foot-pounds is therefore

$$\frac{W(K_p - K_v)(T_1° - T_2°)}{n-1};$$

or, expressing this directly in thermal units, is

$$\frac{W(C_p - C_v)(T_1° - T_2°)}{n-1}.$$

The change in intrinsic energy is $WK_v(T_2° - T_1°)$, since the gas has changed from $T_1°$ to $T_2°$.

The total heat required is that necessary to produce the change in intrinsic energy and do the external work, viz.,

$$WK_v(T_2-T_1)+\frac{W(K_p-K_v)(T_1-T_2)}{n-1}.$$

The equations just derived are general and any value of n may be used except unity, and that value gives isothermal expansion, which has already been discussed.

Since we may suppose heat added or subtracted in any way we choose, a very important special case is that in which the supposition is made that *no* heat is added to the gas from any external source while it is expanding, neither does it lose heat AS HEAT by radiation nor conduction to any outside body. If the gas expands and does work, it must lose some heat. As we have made the conditions such that it is impossible to lose or gain HEAT as HEAT, it is evident that the external work done must be the sole measure of the heat that the gas has lost. This is adiabatic expansion.

For *Adiabatic Expansion* the formula for the total heat required may be equated to zero, since no heat is added or subtracted. Therefore

$$WK_v(T_2-T_1)+\frac{W(K_p-K_v)(T_1-T_2)}{n-1}=0,$$

$$nK_v(T_2-T_1)-K_v(T_2-T_1)+K_p(T_1-T_2)-K_v(T_1-T_2)=0,$$

$$nK_v(T_2-T_1)-K_p(T_2-T_1)=0,$$

$$(nK_v-K_p)(T_2-T_1)=0.$$

Since the temperature decreases T_2 cannot equal T_1, therefore (nK_v-K_p) must be the zero factor. Hence

$$nK_v=K_p, \quad \therefore\ n=\frac{K_p}{K_v}=\frac{C_p}{C_v}.$$

An adiabatic expansion is a particular kind of expansion and hence the general value n cannot be used. For this kind of expansion n has the definite value $\frac{C_p}{C_v}$, which is constant for

any gas but varies with different gases. For simplicity γ is generally used for the value of $\frac{C_p}{C_v}$ for any gas.

The equation for adiabatic expansion is then

$$PV^\gamma = C.$$

The work done during adiabatic expansion is

$$\frac{P_1V_1 - P_2V_2}{\gamma - 1}.$$

The total work of admission and expansion is

$$P_1V_1 + \frac{P_1V_1 - P_2V_2}{\gamma - 1}.$$

The *net* work done per stroke when there is no clearance and the back pressure = the final pressure of expansion

$$= P_1V_1 - P_2V_2 + \frac{P_1V_1 - P_2V_2}{\gamma - 1} = \frac{\gamma}{\gamma - 1}\ (P_1V_1 - P_2V_2)$$
$$= WK_v\gamma(T_1 - T_2) = WK_p(T_1 - T_2) \text{ foot-pounds}$$
$$= WC_p(T_1 - T_2) \text{ B.T.U.}$$

γ for perfectly dry air is $\frac{C_p}{C_v} = \frac{.2375}{.169} = 1.406.$

γ for moist air has some value between 1.4 and 1.2.

The equation $PV^\gamma = C$ may be easily derived from the two fundamental equations of thermodynamics derived on page 152:

$$H = K_p dT - V dP,$$
$$H = K_v dT + P dV.$$

When the expansion is adiabatic $H = 0$:

$$K_p dT = V dP,$$
$$K_v dT = -P dV,$$
$$\frac{K_p}{K_v} = \gamma = -\frac{V dP}{P dV},$$
$$-\gamma \frac{dV}{V} = \frac{dP}{P}.$$

Integrating, $C - \gamma \log V = \log P,$

$C = \gamma \log V + \log P = \log PV^{\gamma},$

$C_1 = PV^{\gamma}.$

To Draw the Curve $PV^n = C$ (Fig. 94).—Suppose the curve and a tangent at any point m is drawn.

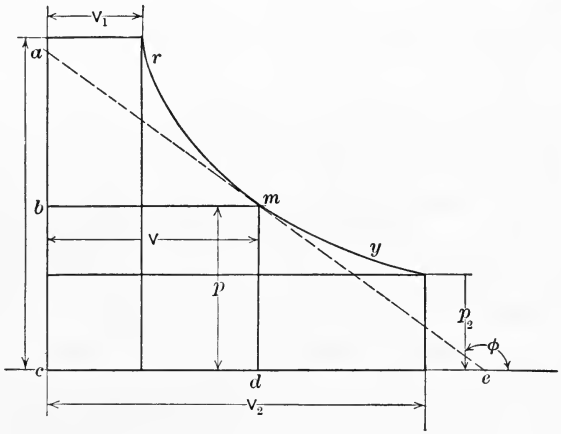

FIG. 94.

Differentiate $PV^n = C$.

$V^n dP + nPV^{n-1}dV = 0$ is the equation of the tangent.

$$\therefore\ dP = -nP\frac{dV}{V},\quad \text{or}\quad \frac{dP}{dV} = -n\frac{P}{V}.$$

From the figure,

$$\frac{dP}{dV} = \frac{md}{de}.$$

$$\therefore\ \frac{md}{de} = -n\frac{md}{cd},\quad \therefore\ \frac{cd}{de} = -n.$$

From similar triangles,

$$\frac{ab}{bc} = -n \text{ also.}$$

The minus sign shows that the angle, ϕ, that the tangent makes with the X axis, if measured from the X axis to the tangent, is greater than 90 degrees. Given one point on the curve and n, the value of C may be calculated. For any assumed V, the corre-

sponding P may be calculated, and then if bc and cd be assumed to be those values, de and ab may be laid off so that the tangent may be drawn. Having a series of points and the tangents, the curve may be drawn through the points and tangent to the tangents.

Logarithmic Cross-section Paper and PV^n Curves.—Logarithmic cross-section paper is invaluable in work dealing with equations of the form $PV^n=C$. By the use of this kind of cross-section paper we find that the drawing of curves is replaced by the drawing of straight lines. Hence in hydraulics and in air or steam compression or expansion, it not only facilitates work immensely but it also serves as a guide to indicate any variation in the law of expansion as the variation of the exponent n becomes immediately apparent.

The *curve* $PV^n=C$ has many disadvantages:

1. It has to be laid out for each different initial P and V. For superheated steam the curve is rather complicated, as it will consist of two curves meeting at the point where saturated steam is converted into superheated steam.

2. The areas in the low-pressure zone are very inaccurate, the $PV^n=C$ curve being there nearly parallel to the axis of V. It does not show at a glance what happens when the initial pressure is lower than the boiler pressure; what happens when the initial pressure is raised or lowered; what happens when the exhaust pressure is raised or lowered; what happens when both of these pressures are changed simultaneously.

3. The whole diagram is not flexible and transparent, so permitting changes in the lay-out to be made rapidly and their effects to be visible instantly.*

These troubles disappear when the curves $PV^n=C$ are plotted on logarithmic cross-section paper. (Fig. 95.)

If we take the logarithm of both sides of the equation $PV^n=C$ we still have a true equation. Hence

$$\log P+n\log V=\log C \quad \text{or} \quad \log P=-n\log V+\log C.$$

In this form, we have the equation of a straight line as it is evidently of the form $y=mx+b$.

Hence, if we plot the logarithms of the various values of P and V and the logarithm of the constant C, we shall have a

* See Steam-turbine Characteristics, Holzworth, Trans. A. S. M. E., Vol. 28.

straight line whose *intercept* on the axis of Y is *log* C and which makes with the X *axis* an angle whose *tangent* is $-n$. It is readily seen how simple it is to plot a straight line and how easy it is to see if its inclination to the X axis varies.

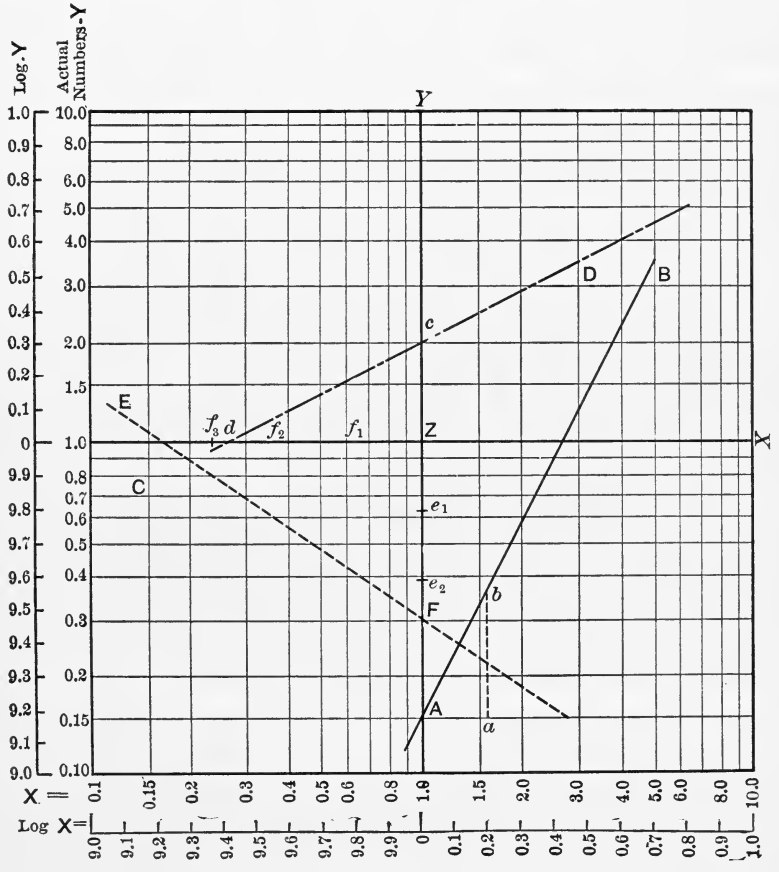

FIG. 95.

Those who have used the slide rule know that it is laid off to a logarithmic scale but that the divisions are marked with the numbers themselves rather than with the logarithms of the numbers. The divisions hence appear very irregular. In this way one multiplies or divides with the aid of the slide rule by the addition or subtraction of logarithms and yet never looks up or knows the logarithms of the quantities multiplied or divided.

Similarly, if the subdivisions on the logarithmic cross-section paper are marked by the numbers instead of their logarithms the straight line form of the curve may be laid off without looking up the logarithms. Nevertheless, it is essential to keep in mind that we are really dealing with logarithms. Hence

(1) The origin on logarithmic scale paper is at the intersection of the lines 1 and 1 since the log (1) = 0.

(2) Multiplying or dividing a number by ten changes its logarithm by 1.0, hence the logarithmic scale paper is divided into squares of a unit (logarithmic) each.

(3) The logarithm of numbers between 1.0 and 0.1 would lie between 0 and −1.0. It is better to mark the intermediary subdivisions 9.9, 9.8, etc., meaning 9.9−10, 9.8−10, etc.(as in logarithms) and so avoid the use of negative quantities. The tenth division line would be 9.0 and the eleventh 8.9.

(4) The intercept on the Y axis will be log C, since if log $V=0$ we would have log $P=\log C$.

(5) The "unit" or "base" of the logarithmic scale cross-section paper is 5 inches. On a large paper these units may be repeated a number of times to the left or right of the Y axis and above or below it. On the right of the Y axis the first line at unit distance is marked 10, the second is marked 100, etc., since the logarithmic markings would have been 1, 2, etc. At unit distances to the left of the Y axis the first line would be marked 0.1, the second 0.01, etc., as the logarithmic markings would have been −1, −2, etc. When an origin has been selected, it cannot be changed during the calculations. Decimal points must not be disregarded. To lay off the line, $P=0.15V^2$ or its equivalent $PV^{-2}=0.15$.

The logarithm of 0.15 is negative or less than zero, hence we find the intercept below the origin, Z, at some point A. The tangent of the slope is 2. This must not be measured by an irregular scale such as the actual numbers appear to have. From A lay off any distance, Aa, and at a erect a perpendicular ab of twice the length of Aa. Through the point b so found, draw the line AbB; it will be the required line.

The converse is apparent. Given the line AB, what is its equation? The intercept on the Y axis is 0.15, which is there-

fore the constant. The value of any intercept divided by its abscissa such as $\frac{ab}{Aa}$ is 2, which is therefore the exponent. Hence the required equation is $Y=0.15X^2$ or $PV^{-2}=0.15$.

To lay off the line $Y=2X^{\cdot 5}$ or its equivalent $PV^{-\frac{1}{2}}=2$. The logarithm of 2 is more than zero, hence the intercept on the Y axis is above the axis of X and is found at c. The tangent of the angle is positive and, by laying off to the left of the origin, Z, an abscissa, $Zd=2Zc$ the point d is found. The required line is dcD.

To lay off the line $PV^{0.66}=0.3$ or $Y=0.3X^{-0.66}$. Lay off any distance Ze_1. Then lay off Ze_2 and Zf_3 equal to twice and three times that distance respectively. Through an intercept on the Y axis $=0.3$ draw a line EF parallel to a line joining f_3 and e_2 It will be the required line.

Keep in mind that the subdivisions are logarithmic and are unequal. Note the position of 1.5 and 0.15.

Relations between Temperature, Volume, and Pressure for a Perfect Gas Expanding Adiabatically.

$$\frac{P_1V_1}{T_1}=R=\frac{P_2V_2}{T_2},\ \therefore\ \frac{P_1}{P_2}=\frac{V_2}{T_2}\frac{T_1}{V_1};$$

$$P_1V_1{}^r=C=P_2V_2{}^r,\quad \frac{P_1}{P_2}=\frac{V_2{}^r}{V_1{}^r}.$$

The general equation is always true and is therefore true in adiabatic expansion. These simultaneous values of $\frac{P_1}{P_2}$ may therefore be equated.

$$\frac{V_2}{V_1}\frac{T_1}{T_2}=\left(\frac{V_2}{V_1}\right)^r \quad \text{or} \quad \frac{T_1}{T_2}=\left(\frac{V_2}{V_1}\right)^{r-1}.$$

Similarly $$\frac{V_1}{V_2}=\frac{P_2}{P_1}\frac{T_1}{T_2},$$

$$\left(\frac{V_1}{V_2}\right)^r=\frac{P_2}{P_1},\quad \text{or} \quad \frac{V_1}{V_2}=\left(\frac{P_2}{P_1}\right)^{\frac{1}{r}}=\frac{P_2}{P_1}\frac{T_1}{T_2}.$$

Hence we see that $$\frac{T_1}{T_2}=\left(\frac{P_2}{P_1}\right)^{\frac{1}{r}-1}=\left(\frac{P_1}{P_2}\right)^{\frac{r-1}{r}}$$

$$\therefore\ T_1 : T_2 :: P_1^{\frac{r-1}{r}} : P_2^{\frac{r-1}{r}},$$
$$T_1 : T_2 :: {V_2}^{r-1} : {V_1}^{r-1},$$
$$P_1 : P_2 :: {V_2}^{r} : {V_1}^{r}.$$

Ex. 56. The area of the piston of an air-compressor is 4 square feet, the stroke is 2 feet. A cylinder full of dry air at 14 pounds per square inch pressure, temperature 60° F., is compressed adiabatically till the volume is reduced to 1/4 the original amount. The air is then rejected at constant pressure. Compressor is double-acting, without clearance, and makes 100 double strokes per minute. Find the final pressure of compression, final temperature of compression, heat added to the air, and horse-power to effect compression.

Ex. 57. Find the same quantities on the supposition that the air is damp and the law of compression is $PV^{1.2}=C$.

Ex. 58. A cylinder of indefinite length contains 3 cubic feet of air under a pressure of 200 pounds per square foot and at a temperature of 300° F. The pressure is varied so that the gas expands according to the law $PV^{\frac{1}{2}}=C$ till the volume is 9 cubic feet. How much heat is added or subtracted, what is the work of expansion, and what is the final temperature?

Ex. 59. A cylinder of indefinite length contains 4 cubic feet of air at 539° F. and at a pressure of 400 pounds per square foot. The volume expands to 16 cubic feet, the pressure varying in accordance with the law $PV^{-\frac{1}{2}}=C$. Find the heat added and the work of expansion.

Ex. 60. Assume any gas at any pressure, volume, and temperature. Let it be heated or cooled irregularly, and let it do work or have work done on it. The curve of expansion, which may be a wavy line, is given, viz., all the ordinates and abscissæ can be measured to known scales. At any point of this curve find how much heat has been expended and the increase (+ or −) of the heat in the gas above the original amount in the gas when at the original pressure, volume, and temperature.

Heat Energy Represented by Areas. (Fig. 96.)—Assume any volume of any perfect gas, at any temperature, volume, and pressure, in a cylinder whose envelope is impervious to heat. Let the stroke of this cylinder be indefinite in length. Let the gas expand adiabatically (expending its internal heat in doing external work), the resistance gradually reducing to zero pounds absolute. When this is done it is evident that all the heat in the gas has been converted into external work.

1. The work of adiabatic expansion is

$$\frac{P_1V_1-P_2V_2}{\gamma-1}$$

When $P_2=0$ the work is $=\frac{P_1V_1}{\gamma-1}$.

If the pressure is reduced to zero, it is evident that the absolute temperature of the gas is reduced to zero and all of its heat has been expended. The total expenditure of heat equals the intrinsic energy of the gas at the beginning of expansion $=WK_vT_1$.

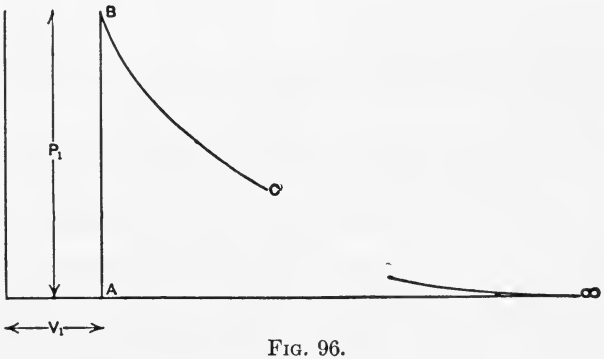

FIG. 96.

$$\therefore \quad WK_vT_1=\frac{P_1V_1}{(\gamma-1)}=\frac{WRT_1}{\gamma-1}.$$

Ex. 61. Treating air as a perfect gas, what is the total intrinsic energy in 5 cubic feet of dry air at 10 pounds per square inch pressure absolute and 75° F.?

2. (Fig. 97.)—Let the gas in the preceding problem be heated at constant volume, V_1, until the pressure becomes P_2 and the temperature T_2. As in the preceding problem, reduce the resistance of the piston in such manner that the curve of expansion is adiabatic, and continue it until both temperature and pressure are reduced to zero.

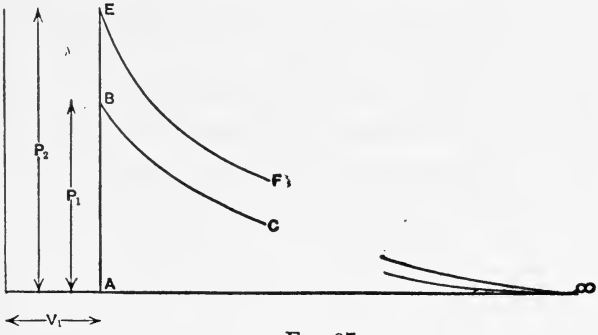

FIG. 97.

The work done during expansion will be $\frac{P_2V_1}{\gamma-1}$. The increase

of work in this case over that in the preceding one is the area $\infty BE\infty$ between the two adiabatics. This increase of work must equal the heat added to the gas. Therefore

$$WK_v(T_2-T_1)=\frac{V_1}{\gamma-1}(P_2-P_1).$$

In this case

$$\frac{P_1V_1}{T_1}=WR=\frac{P_2V_1}{T_2}.$$

$$\therefore \text{ The area } \infty BE\infty=\frac{WR}{\gamma-1}(T_2-T_1)=WK_v(T_2-T_1).$$

Ex. 62. If the dry air in the preceding example is heated to 1000° F. absolute, at constant volume, how many foot-pounds of work could be obtained from it if it were expanded infinitely?

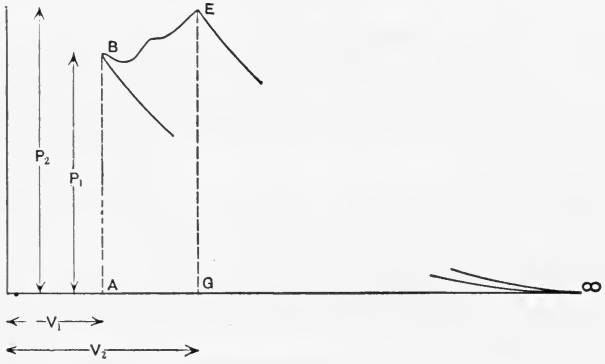

FIG. 98.

3. Let the gas at P_1, V_1, T_1 gain or lose heat so that the expansion line BE is formed. Draw the adiabatics through the points B and E. Then the total heat added (positively or negatively) to the gas to do the external work and change the intrinsic energy from that which it possessed at P_1, V_1, T_1 is $\infty BE\infty$. For if to the heat in the gas at P_1, V_1, T_1 (area $\infty AB\infty$) we add heat equal to the area $\infty BE\infty$ (or subtract it) we obtain the area $\infty ABE\infty$. Now of the heat equivalent to this latter area we have expended the area $ABEG$ in external work and hence that heat is not in the gas and must therefore be subtracted. This leaves the area $\infty GE\infty$ as the heat *in* the gas at P_2, V_2, T_2. As this is correct the total heat added to change the state of a gas

from P_1, V_1, T_1 to P_2, V_2, T_2 is equal to the area enclosed by its PV curve and the two adiabatics of the two states.

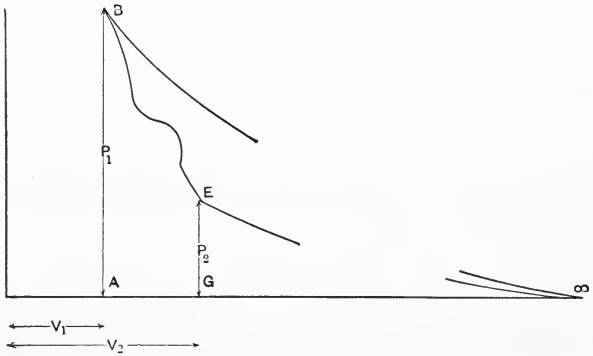

FIG. 99.

Ex. 63. If the dry air in Ex. 61 were heated, the temperature being kept constant, and its volume doubled, show that its final energy is the same as its initial energy.

4. Suppose the gas in the preceding case neither gains nor loses heat. The heat in the gas remains constant and the curve

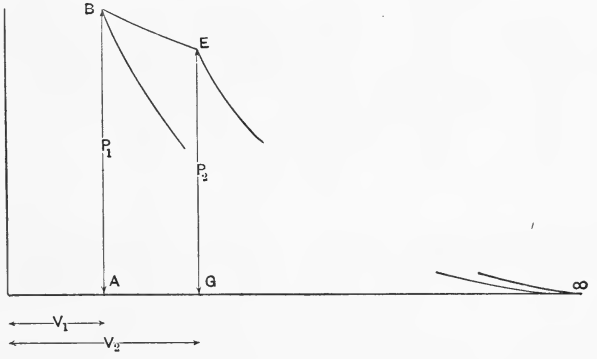

FIG. 100.

BE is isothermal. If the gas does work, it must receive heat as fast as it loses it in doing external work. If work is done on the gas, then the heat in the gas would increase unless it were cooled, the loss of heat being measured by the work done on the gas.

By supposition $\quad \infty AB\infty = \infty GE\infty;$

but $\quad \infty ABE\infty = \infty AB\infty + \infty BE\infty = \infty GE\infty + ABEG.$

$$\therefore \infty BE\infty = ABEG.$$

If B represents the initial state, then the gas expands, receives heat as heat and loses it in doing external work. If E represents the initial state, then work is done on the gas in compressing it to B and heat must be taken from the gas to keep its temperature constant.

Ex. 64. If the air in Ex. 61 were expanded adiabatically till its volume was trebled, what would be the external work done and what would be its loss of heat?

The preceding demonstrations enable us to give graphic solution to the two fundamental equations of thermodynamics:

$$dH = K_v dT + PdV,$$
$$dH = K_p dT - VdP.$$

The first of these was written by Clausius.

$$dH = K_v dT + dL + dU.$$

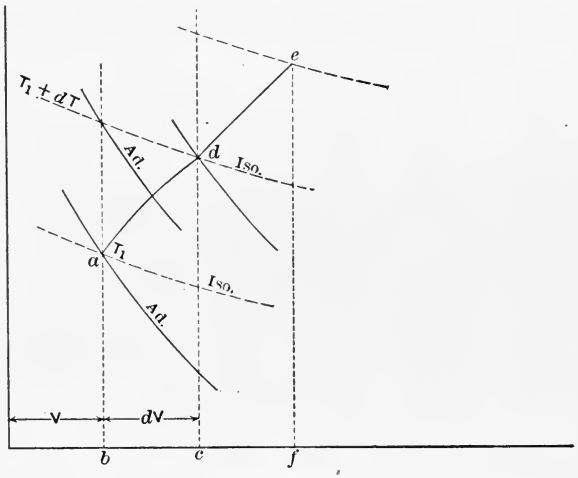

FIG. 101.

In this equation $K_v dT$ represents, as before, the increase in the intrinsic energy of the gas, whilst dL represents the work of molecular separation and dU represents external or visible work. Some heat must be expended in separating even the molecules of perfect gases, since they must have some attraction for one another because they have mass. In practical work this is small enough to be neglected.

Let $a\ d\ e\ \ldots$ represent the path of the gas. Through the points $a, d, e, \ldots$ pass both an isothermal and an adiabatic. The area between the adiabatic and the base is in each case equal to the heat in the gas. At a the heat in the gas is $K_v T_1$; at d the heat in the gas is $K_v(T_1+dT)$. The work done $badc = PdV$. Let dH = heat added. Then

$$K_v T_1 + dH = K_v(T_1+dT) + PdV$$

$$dH = K_v dT + PdV.$$

To derive the formula $dH = K_p dT - VdP$.

Let $ade\ \ldots$ be the path of the fluid. Through a draw an isothermal T_1 and an adiabatic. Let the next higher isothermal T_1+dT be df. The heat in the gas at $a = K_v T_1$.

The heat in the gas at $f = K_v(T_1+dT)$. The heat added

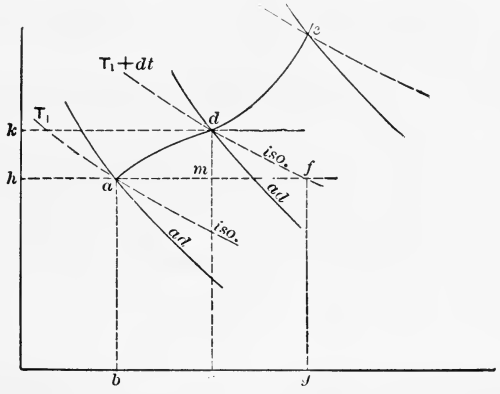

FIG. 102.

in going from a to $f = \{bafg + K_v(T_1+dT)\} - K_v T_1 = K_v dT + bafg = K_p dT$.

The path of the fluid is from a to d, however. The heat in the gas at d and f is the same since those points are on the same isothermal. To reach the point d from f the gas must be cooled or heat must be subtracted equal to the area $dcgf$.

Since df is an isothermal, $(dc) \times (dk) = (fg) \times (fh)$. Subtract the common area $(hm) \times (mc)$ and we have $kdmh = mfgc$. Adding the common area dfm to each side and we have $kdfh = dcgf$, but $kdfh = VdP$; therefore the heat expended, $dH, = K_p dT - VdP$.

Carnot Cycle.—The term cycle may be used to indicate a period of time in which a series of events repeat themselves; a closed figure that may be a graphic description of a recurring series of events, or a series of operations bringing the thing operated upon to its original state. The Carnot cycle is a cycle of operations performed on a perfect gas working in an engine of perfect mechanical efficiency, and it will be proved that the thermodynamic—heat converted into mechanical work—efficiency of this engine is the highest that can be obtained by the use of any substance or combination of substances in any engine working in any other cycle *between the same limits of temperature.* The practical engine as it improves approaches this efficiency, but can never attain it. In other words, the nearer the efficiency of any heat-engine is to that of the Carnot cycle efficiency (between the same temperature limits) the nearer it is to its highest attainable perfection.

Note carefully in the Carnot cycle that—

(1) All the heat received as *heat* is at *one* temperature and that is the *highest.*

(2) That all the heat rejected as *heat* is at *one* temperature and that is the *lowest.*

(3) In order that (2) may be so the heat of the substance must be lowered by an adiabatic expansion in which the heat that disappears does so in doing mechanical work.

(4) In order that (1) may be so the gas must be compressed adiabatically, so that all the heat received as heat may be received at the highest possible temperature.

In order that we may control absolutely the gain and loss of heat, let us imagine a cylinder (Fig. **103**) made of a material that is absolutely impervious to heat and has zero specific heat. In other words, it takes the temperature of the gas inside immediately without requiring any heat therefor. The piston is to be made of the same material. Let there be three separate heads that may be applied, at will, to one end. One head, H, contains an indefinite amount of heat at a temperature T_1. Since the amount of heat is infinite the withdrawal of any finite amount will not lower its temperature. Let the other head, C, contain an infinite amount of heat at T_3. Since the amount is infinite,

the addition of a finite amount will not raise its temperature. Let the other head, N, be a non-conductor of similar material to the cylinder. Let us imagine that we may change heads in any desired way without losing gas, that the engine is single-acting (there being no head in the right side of the cylinder), and that the back pressure against the piston is zero pounds.

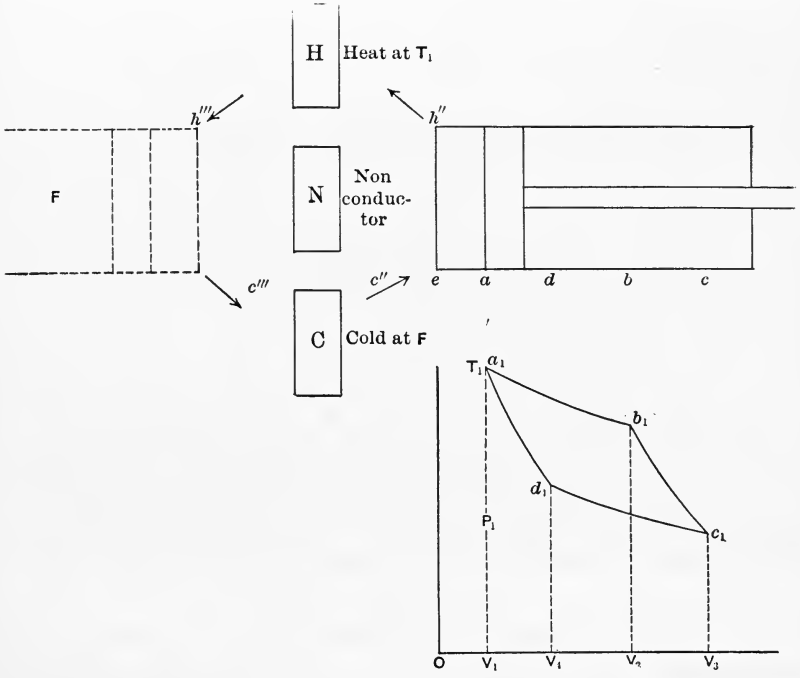

FIG. 103.

Let N be applied at the end e, the piston to be at a; the volume ea to be filled with a perfect gas at P_1, V_1, T_1, and hence W may be calculated if the kind of gas is known. The resistance is P_1.

1. Replace N with H; reduce the resistance gradually; motion will ensue as soon as the pressure is an infinitesimal amount less than that called for by the law $P_1V_1 = \text{const.}$ The temperature will be constantly T_1. The pressures will be represented by the ordinates of the isothermal curve a_1b_1. The work done will be $a_1b_1V_2V_1$. The ratio of expansion, r, will be $\frac{OV_2}{OV_1}$. The external

work will be $P_1V_1 \log_\epsilon r$, or its equal, $P_2V_2 \log_\epsilon r$. The heat received will be equal to the work done, or $WRT_1 \log_\epsilon r$.

2. At b replace H by N. Allow adiabatic expansion till the end of the stroke. The pressures will vary in accordance with the ordinates of b_1c_1. The work will be the area of $b_1c_1V_3V_2$, which is equal to $\frac{P_2V_2 - P_3V_3}{\gamma - 1}$. No heat has been received and the temperature has been reduced to T_3, the temperature of the head, C. The loss of intrinsic energy equals $WK_V(T_3 - T_2)$. To accomplish this, however, we now see that the point b_1 in the stroke must be chosen in accordance with some law. We know that $\frac{T_2}{T_1} = \left(\frac{V_1}{V_2}\right)^{\gamma-1}$, or in our case $\frac{T_2}{T_3} = \left(\frac{OV_3}{OV_2}\right)^{\gamma-1}$. Knowing T_2, T_3, and OV_3, we can readily find OV_2.

3. The return-stroke must be made by the action of some outside force tending to compress the gas. Replace N with C. Compressing the gas (by doing work on it) tends to heat it and therefore increase the pressure that now acts as a resistance. The presence of C keeps the back pressure down, as it keeps the temperature down to T_3. Since C is at the lowest possible temperature T_3, it is evident that this resistance is the least possible.

It is evident that c_1d_1 is the curve of back pressures and that $c_1d_1V_4V_3$ is the back-pressure work up to the point d_1. The heat equivalent to this work is wasted. But we have made the waste as small as possible by using the lowest T_3. This wasted heat is $WRT_3 \log \frac{OV_3}{OV_4}$.

4. The point d_1 of the stroke must be chosen so that, if C is replaced by N and the gas is compressed into its initial volume, its temperature will be increased from T_3 to the initial temperature T_1. Since $\frac{T_2}{T_1} = \left(\frac{V_1}{V_2}\right)^{\gamma-1}$ we have

$$\frac{T_1}{T_4} = \left(\frac{OV_4}{OV_1}\right)^{\gamma-1},$$

but $T_4 = T_3$ and $T_1 = T_2$; therefore

$$\frac{T_1}{T_4} = \frac{T_2}{T_3}; \quad \therefore \frac{OV_4}{OV_1} = \frac{OV_3}{OV_2},$$

or the ratio of adiabatic compression must equal that of adiabatic expansion. From the above ratio of volumes we may write

$$\frac{OV_4}{OV_3}=\frac{OV_1}{OV_2},$$

or the ratio of isothermal expansion equals the ratio of isothermal compression. The work of adiabatic compression is

$$\frac{P_1V_1-P_4V_4}{\gamma-1}=\frac{P_2V_2-P_3V_3}{\gamma-1},$$

or the work of adiabatic expansion. The gain of the gas in intrinsic energy during compression is $WK_v(T_1-T_4)$.

Summing up results we have the work done in adiabatic expansion balanced by the work of compression, and the heat or intrinsic energy lost in adiabatic expansion equals that gained in adiabatic compression. The net work must then be the difference between that done in isothermal expansion and that required for the isothermal compression. This is

$$P_1V_1\log_\epsilon r-P_3V_3\log_\epsilon r=\log_\epsilon r(P_1V_1-P_3V_3),$$

or

$$WR\log_\epsilon r(T_1-T_3).$$

The efficiency is then measured by the ratio of the work done to the heat expended or

$$\frac{(WR\log_\epsilon r)(T_1-T_3)}{(WR\log_\epsilon r)T_1}=\frac{T_1-T_3}{T_1}.$$

This efficiency is independent of the gas and the mechanism; since it contains no terms dependent on the gas or the mechanism, it depends upon T_3, as the efficiency evidently increases with a decrease of T_3. The lowest practical limit of T_3 is the *temperature* of the atmosphere. Practically, then, increase of efficiency is to be sought in increasing the initial temperature of the heat transfer agents. That this is correct is seen in the increased efficiency of the steam-engine with increase of pressure and temperature in the boilers. Gas-engines, utilizing gas at still higher temperatures, are even more economical.

The above cycle is reversible. With the non-conducting cover in place, permit the gas to expand adiabatically to d, replace N by C and allow the gas to expand isothermally, drawing heat from C. Exchange C for N and compress the gas adiabatically to b, and then, using the cover H in place of N, compress at T_1 until the original volume is reached. In this cycle instead of the gas doing work it is evident that work has been done on the gas. As before, the adiabatic areas will balance one another, as will the gain and loss of heat in the gas $WK_v(T_1-T_3)$. The quantity of heat, $WRT_3 \log_\epsilon r$, has been taken from the cold body, and $WRT_1 \log_\epsilon r$ has been added to the hot body. Work equal to $WR \log_\epsilon r(T_1-T_3)$ has been done on the gas, the required energy being supplied from an outside source. The efficiency of this second engine running backward is the same as that of the first running forward. If there is any cycle more efficient than the Carnot cycle let a third engine F, using that cycle, taking heat h''' from the source H and rejecting heat c''' into C, drive the second engine which takes heat c'' from C and rejects heat h'' into H.

In some respects this is like a water-wheel driven by water from a height, h, driving another water-wheel that takes the water running from the first and restores it to the original height h.

If the power of each engine is the same $h'''-c'''=h''-c''$, but according to supposition

$$\frac{h'''-c'''}{h'''} > \frac{h''-c''}{h''},$$

which will only be true when $h'''<h''$. That is, this system is taking more heat from the cold body and forcing it into the hot body than is coming from the hot body into the cold one. This is a self-acting system, since each drives the other (the amounts of work of each being equal) and, neglecting friction, could theoretically go on forever. We thus have heat transferred from a cold body to a hot one by a self-acting apparatus. This is contrary to human experience. Since our premises bring us to an untrue conclusion they must be incorrect. Hence engine F cannot have a cycle more perfect than the Carnot cycle.

Ex. 65. Suppose the thermal efficiency of the furnace = 50% and

the mechanical efficiency of the hot-air engine = 65%. Let the fuel contain 14,000 B.T.U. per pound, and the engine make 100 cycles per minute. Find the B.H.P. and I.H.P. per 100 pounds of fuel for the following cycle. One pound of dry air at 14.7 pounds per square inch pressure at 60° F. is drawn in per stroke. It is compressed isothermally and then adiabatically to 1200° F. absolute, receives heat at that temperature, and expands adiabatically to the starting conditions.

CHAPTER VI.

MEASURING THE EFFECTS OF HEAT ON WATER AND STEAM.

We have seen that when heat is added to a substance a careful analysis will show only three elementary effects are accomplished. The first two are ideal since they are always accompanied by the third. We have found, however, that in the case of heating solids and liquids—so long as the former are not brought too near their melting-point and the latter too near their point of vaporization—the heat-equivalent of the internal and external work is practically negligible, and hence all the heat is expended in raising their temperature.

If the specific heat of ice is .5, how many B.T.U. would be required to raise 3 pounds of ice from $-43°$ F. to 32° F.?

$$3 \times .5 \times 75 = 112.5 \text{ B.T.U.}$$

The above number of thermal units would be absorbed by a piece of ice weighing 3 pounds that had been cooled artificially to $-43°$ F. and then placed in open air whose temperature was 32° F.

Melting of Solids.—When solids melt and become liquids the variation in volume is slight, and we may say that all the heat is spent in overcoming certain molecular attraction forces. To melt the above quantity of ice or convert 3 pounds of ice at 32° F. to water at 32° F. would require, since the latent heat of water is 144 B.T.U.,

$$3 \times 144 = 432 \text{ B.T.U.}$$

Boiling-point of Water.—If we heat the 3 pounds of water at 32° F. we have seen that there will be a slight and slow formation of vapor at the surface of the liquid at various temperatures.

Rapid boiling, where the steam is formed at the heating surface and rises through the liquid to its surface,* will always take place at the same temperature, in the open air, at the same locality. (It is well known that the presence of gases and salts in the water and the roughness and character of the containinig vessel may change the boiling-point by one or two degrees.) Hence the vapor tension equals the pressure on the surface of the liquid. If the atmospheric pressure is 14.7 pounds per square inch, the water will boil at 212° F.

Let us put 3 pounds of water in a cylinder 13.54″ in diameter, so that the area will be exactly 1 square foot. The height of the water will be $\cdot\frac{3}{62.425} = .0483'$. This calculation is only made to show that the volume of the water may be neglected in future calculations.

The pressure of the atmosphere on the water may be replaced by a piston weighing $14.7 \times 144 = 2116.8$ pounds. To the actual weight of any piston that we might use, if exposed to atmospheric pressure, this weight must be added to obtain the absolute pressure on the water.

If we determine the temperature at which the water boils under a series of pistons of different weights, we shall find that the temperature increases with the weight, but, in no simple proportion. Regnault has done this work for us in a most careful way, and given us the following empirical formula connecting the pressure and the observed temperature at which boiling took place:

$$\text{Log } P = A + Bm^t + Cn^t,$$

where A, B, m, n are determined constants and t is the temperature of the boiling water in degrees Centigrade.

Rankine's formula is equally difficult to apply:

$$\text{Log } P = A - \frac{B}{T} - \frac{C}{T^2},$$

where A, B, and C are constants and T is temperature of the boiling water in degrees Fahr. absolute.

Practically, then, it is essential to refer to a set of tables to find

*For an extended discussion, see Rowan's *Modern Steam Boilers.*

the pressure corresponding to any boiling-point or to find the boiling-point corresponding to any pressure.

Heat of the Liquid.—If we assume that the specific heat of water is unity throughout its range from 32° F. to the boiling-point, we do not need tables to find the quantity of heat necessary to raise W pounds of water from one temperature, t_1, to another, t_2, as it is simply $W \times 1 \times (t_2 - t_1)$.

When considerable accuracy is necessary we must refer to the tables, as the specific heat of water is not constant. The actual number of B.T.U. that are required to heat water from 32° F. to any other temperature—which is a boiling-point at some pressure—have been calculated and tabulated. The increase in the specific heat at high temperatures is due to the increase of internal work as the water approaches the condition of steam. If the pressure is high enough the molecular condition of the water at the boiling-point does not differ from that of steam; in other words, the latent heat has become zero. This temperature is called the critical temperature.

Problem.—How many B.T.U. does it take to heat one pound of water from 62° F. to the boiling-point under a pressure of 400 pounds per square inch? If the specific heat is assumed to be constant, the boiling-point (by the tables) being 445° F.,

$$(445° - 62°) = 383 \text{ B.T.U.}$$

If the tables are used, for variable specific heat,

$$419.8 - 30.12 = 389.68 \text{ B.T.U.}$$

In this calculation 30.12 measures the heat of the water above 32° F. initially, and 419.8 measures the heat in the liquid above 32° F. finally. Hence, in general, if

q_1 = heat in the liquid above 32° F. initially,
q_2 = heat in the liquid above 32° F. finally.
Heat added = $(q_2 - q_1)$ B.T.U.

The above difference of 6.68 B.T.U. is about 2% of the total. The error per degree at 400 pounds pressure in using the first method is 5.5%, hence particular care must be used at high pressures.

Expansion of Water when Heated to the Boiling-point.—We have seen that the volume occupied by water at 32° F. is negligible, and we shall now indicate the importance of the external work that is done when water is heated under pressure up to its boiling-point.

Fig. 104 represents a cylinder 13.54″ diameter or 1 square foot in area containing 3 pounds of water at 32° F. under a piston, *P*, that is to take the place of the atmospheric pressure, and therefore weighs 2116.8 pounds. Let us put on this piston a shaft of wrought iron 12″ in diameter and some 23′ long. Heat is added till the water is brought to the boiling-point, which, by trial, is found to be 307° F. How much heat was added? and show how much was spent in doing the external work, i.e., raising the shaft by the expansion of the water.

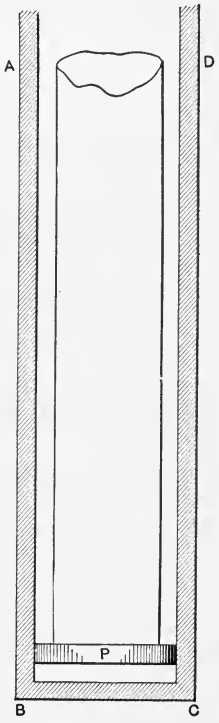

FIG. 104.

The absolute pressure corresponding to a boiling-point of 307° F. is 74.5 pounds per square inch. The total weight of shaft and piston will be $74.5 \times 144 = 10{,}728$ pounds.

By formula, the heat added is $3 \times 1 \times (307° - 32°) = 825$ B.T.U.

By the table, the heat added is $3q_1$ or $3 \times 276.9 = 830.7$ B.T.U.

The increase in volume of the water will be about 10% of the original volume.

$$.0483 \times .1 = .00483 \text{ cubic feet.}$$

The external work will be

$$\frac{10728 \times .00483}{778} = .07 \text{ B.T.U.,}$$

which may be neglected.

Vaporizing a Liquid at its Boiling-point.—Let heat be added to the boiling water. We note two effects, (*b*) and (*c*):

1. Notwithstanding the addition of heat, the temperature of the water remains constant at 307° F.

2. The piston and shaft rise until they are 17.28 feet above the original position, or, to be more accurate, the bottom of the piston is 17.28 feet above the bottom of the cylinder.

If we experimented with shafts of different weights we might ultimately discover Rankine's formula connecting pressure and volume, viz., $PV^{1.3}=475$. Practically, however, it is easier to use the table, and we there discover that one pound *weight* of steam at 74.5 pounds pressure per square inch absolute will occupy a volume of 5.76 cubic feet, and hence 3 pounds of water converted into steam will, at that pressure, occupy $3\times5.76=17.28$ cu. ft. The actual rise of the piston is therefore $17.28-.0483=17.2317$ feet.

As the temperature of the liquid does not change, but a liquid is changed into a gas and external work is done, we see that all heat is expended in doing two things only:

(*b*) Separating the molecules of the liquid.
(*c*) Doing external work.

The purely theoretical value of (*b*) may be obtained by measuring the sum of *b* and *c* and subtracting the value of *c*, which may be measured directly. The sum of *b* and *c* is called the latent heat and is found in the tables under that title. (See Table VIII.)

Latent heat of evaporation at 74.5 pounds per square inch
$$=898.6 \text{ B.T.U.}=L_1.$$

$\therefore$ Latent heat of 3 pounds weight of steam at that pressure
$$=3\times898.6=2695.8.$$

The heat-equivalent of the external work is

$$\frac{10{,}728\times17.28}{778}=239.1 \text{ B.T.U.},$$

or
$$\frac{239.1}{3}=79.7 \text{ B.T.U. per pound of steam}=Apu.$$

The value of the (*b*) event per pound would be

$$\frac{2695.8-239.1}{3}=818.9 \text{ B.T.U.}=\rho_1.$$

This value will be found tabulated under the head of Heat Required to Overcome Internal Resistance $=\rho$.

We may now tabulate all our results per pound of steam. Let

Total heat required to *produce* one pound of steam from water at 32° F. $\Big\} = \lambda =$ { Heat in the steam { q = Heat in the liquid + ρ = Internal work heat } + External work { Apu = External work heat } } Latent heat $= L$,

$$\lambda_1 = q_1 + \rho_1 + Ap_1u = 276.9 + 819 + 79.7,$$

where $A = {}^1/_{778}$; p_1 = pressure in pounds per square foot; u = volume in cubic feet of one pound of steam.

If the water were originally at some temperature t_2 so that it contained q_2 thermal units above 32° F., then if

$$t_2 = 62°\text{ F. and } q_2 = 30\text{ B.T.U.},$$
$$\lambda_1 = q_1 - q_2 + \rho_1 + Ap_1u = 276.9 - 30 + 819 + 79.7,$$
$$\lambda_1 = q_1 - q_2 + L_1.$$

Heat *in* Steam and Heat Required to Produce Steam.—Many students and some authors confuse these terms. Steam cannot be continuously made at a constant pressure without the performance of work, as the continuous formation of steam leads either to an increase of pressure or an increase of volume. The condition of uniform pressure then necessitates increase of volume under a pressure, and therefore work. When steam blows off from a weighted safety-valve, the heat thrown away is the heat required to produce steam, since that steam was formed at constant pressure. The heat that is required to RAISE steam in a closed boiler is not the heat required to produce steam at the highest pressure, since the pressure has varied from that of the atmosphere to that of the highest pressure.

In our experiment with a cylinder one square foot in area, let the piston, weighing 100 pounds per square inch, rest on a pound of water at 60° F. The heat required to produce one pound of steam from this water is $1091.7 + .305(327.6° - 32°) - (60° - 32°)$.

If the piston is fixed at the top of its stroke and the steam is cooled off till the water at the bottom is 60° F., how much heat has been taken away? Evidently it is not the quantity put in, as the piston is at the top of its stroke. Further, the water at the bottom of the cylinder does not weigh one pound, as the cylinder must be filled with steam at a temperature of 60° F. If we drop

the piston on this steam and then bring the temperature down to 60° F., the cycle will be complete and we will then have abstracted the total heat put in.

To obtain the heat IN steam, subtract from the heat required to produce the same weight of steam the heat equivalent of the external work done.

The engineer ordinarily has no need for steam- and water-temperatures below 32° F. As change of state occurs at that temperature it is wisely used as an origin in the following formula devised by Regnault:

$$\text{Total heat required to } \textit{produce} \text{ steam} = 1091.7 + .305(T° - 32) - (t° - 32);$$

where $t°$ = temperature of the feed-water;

$T°$ = temperature at which the steam is formed at constant pressure.

If the temperature of the feed-water is 32° F., the last term disappears, and it is evident that if the feed-water is at a higher temperature than 32°, less heat will be taken, and hence the last term should be negative.

Modifications of Regnault's Results.—After the student has used different steam tables he will notice slight variations in the values assigned to the same quantities. The recent accurate and extensive experiments to determine the specific heat of superheated steam has disclosed the inaccuracies of the steam tables based on Regnault's formulas. These experiments have shown that it is extremely difficult to produce and maintain steam in an exactly dry and saturated condition. Small globules of water may float around even in highly superheated steam and thorough mixing is essential to its production. Hence the difficulties experienced in the attempts to produce continuously exactly dry saturated steam may be imagined.

Fig. 105 and Table A will show the variations from the Regnault table as deduced by Dr. Davis. The formula which he deduces is not accurate below 212° F. Its best range is from 212° F. to 400° F.

Total heat required to produce one pound of steam is

$$H = 1150.3 + 0.3745(t° - 212°) - 0.000550(t° - 212°)^2.$$

The tables given in this book, however, are based on Regnault's

formulas. In the middle range of temperatures they are in error one-half of one per cent which is unimportant to engineers.

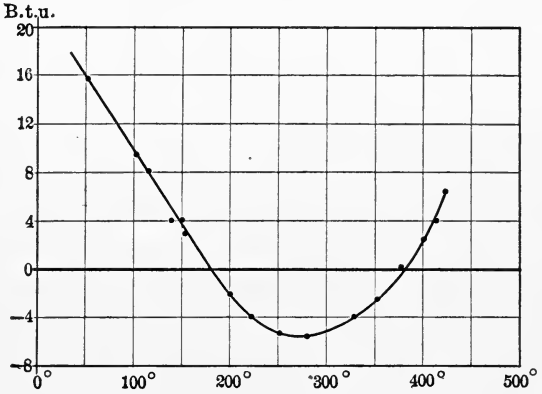

FIG. 105.—Deviation in B.T.U. (from values given in Peabody Tables).

TABLE A.

DIFFERENCES BETWEEN PROPERTIES OF DRY SATURATED STEAM AS GIVEN BY DAVIS FORMULA AND PEABODY TABLES (MODIFIED IN EIGHTH EDITION).

Temperature, Degrees Fahrenheit.	Pressure, Pounds Absolute.	Total Heat.		Specific Volume.	
		Davis.	Peabody.	Davis.	Peabody.
32	0.089	1073.4	1091.7	3294	3395
100	0.949	1103.6	1112.4	349.7	354.7
212	14.7	1150.3	1146.6	26.76	26.66
327.8	100	1186.3	1181.9	4.412	4.409
358.5	150	1193.4	1191.9	2.998	3.016
381.9	200	1198.1	1198.4	2.27	2.299
401.0	250	1201.5	1204.2	1.837	1.858
417.4	300	1204.1	1209.3	1.540	1.558
426.3	330	1205.3	1211.9	1.403	1.417

Use of Formulas.—In text-books formulas are ordinarily given for latent heat and internal latent heat, as well as other forms for the total heat, such as

$$1082+.305T°-(t°-32),$$
$$1146.7+.305(T°-212)-(t°-32).$$

The constant repetition by the student of one fundamental formula, in different phases, will result in a better comprehension, by him, of the meaning of each of the items of heat expenditure than he will obtain by the use of separate formulas.

The student should have a few rough guides as to the relative importance of heat quantities and their variation with pressure. For instance, let him examine the amount that external-work heat varies from 80 B.T.U. for pressures between 80 and 250 pounds per square inch. Similarly note, for the same range of pressures, the variation of the total heat from 1190 B.T.U. (Fig. 106) Table VIII.

Quality of Steam.—Steam formed in a steam-boiler is always saturated steam, as the space over the water contains nothing but the vapor of water, i.e., the SPACE is saturated. This steam may be either dry saturated or wet saturated steam. If it con-

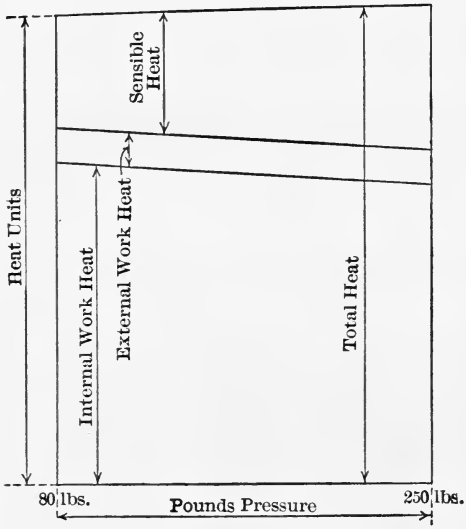

FIG. 106.

tains per pound the number of thermal units called for by the above formula of Regnault, it is dry saturated steam; if it contain a less number, it is wet saturated steam. If this dry steam passes through pipes or tubes and has more heat added to it, then it is called superheated steam. Hence dry steam may be either saturated or superheated steam; usually, however, the term dry is restricted to dry saturated steam.

Ex. 68. How many B. T. U. are required to convert feed-water at 70° F. into steam at 327°.6 F., pressure 100 pounds absolute? If

the volume occupied by 1 pound weight of this steam is 4.4 cubic feet, find the internal latent heat.

Ex. 69. A $10'' \times 10''$ steam-pump using steam full stroke at 100 pounds gage pressure makes 40 double strokes a minute. If half the steam that enters the pump is condensed, find the work done per minute in foot-pounds, the number of pounds of steam used per hour by the pump, and its efficiency.

Ex. 70. The thermal efficiency of an engine is 14%. How many pounds of feed-water will it require per horse-power hour if the boiler pressure is 150 pounds and the temperature of the feed is 70° F.?

Ex. 71. Boiler pressure 125, gage; feed 65° F.; engine uses 20.5 pounds of feed-water per horse-power. What will be the gain in efficiency if there is installed a feed-heater that uses only waste heat and raises the temperature of the feed-water to 212° F.?

Ex. 72. A tank $8' \times 8' \times 4'$ is filled 3 feet deep with water at 50° F. How many pounds of steam at 324° F. will be condensed in a steam-coil in the bottom of the tank in bringing the tank-water to the boiling-point? (The condensed steam in the coils does not cool below 324° F.)

Ex. 73. A certain boiler uses 12,000 pounds of water per hour. From a catalog pick out a feed-water pump. If it uses per stroke 165% of the volume of its steam-cylinder, find the number of pounds of water pumped per pound of steam.

When steam is formed slowly and carefully in a well-lagged vessel, such steam is always *dry saturated* steam. If the steam be formed rapidly and there are violent steam currents it is easy to see how small vesicles of water may be swept along by the current of the steam. More heat must be spent on these minute drops of water to convert them into steam. This extra heat is evidently a percentage of the latent alone, since the drops have the same temperature as the dry steam by which they are carried.

Wet Steam.—As wet steam does not contain the same number of heat-units as dry steam and is much less efficient for use in steam-engines, it is necessary to have instruments to measure its degree of wetness or its quality. Whether the boiler formed wet steam, or the wetness arose from condensation due to radiation losses from the steam-pipe, there is little excuse for allowing wet steam to enter the engine since an efficient form of separator near the engine should remove all the moisture. In measuring the

evaporation of water per pound of coal, impossible results have been reported by experimenters through neglecting the measurement of the quality of steam produced. As the moisture is only water at the boiling-point and requires one-quarter or one-fifth as much heat as an equal weight of dry steam, it is easily seen how the presence of only a small percentage of moisture will materially alter the results.

Let x = the per cent of dry steam in 1 pound of a mixture of steam and water, then

$100-x$ = the per cent of water present.

If h_1 = the heat in 1 pound of water above 32° F., then h_2-h_1 will be the number of B.T.U. required to heat this water to the boiling-point, t_2, corresponding to h_2.

If only x per cent of this water at t_2 is evaporated, the total expenditure of heat will be

$$xL_2+h_2-h_1, \quad \text{or less accurately,} \quad xL_2+t_2-t_1.$$

Problem.—If the quality of steam issuing from a boiler is 97 per cent, temperature of feed-water is 120° F., boiler pressure 100 pounds, gage, how many B.T.U. are expended per pound of steam?

The temperature corresponding to 115 lbs. abs. is 337°.9 F,

$$L=1091.7+.305(337°.9-32)-(337°.9-32)=877 \text{ B.T.U.}$$

$$.97\times877+337.9-120=1068.59 \text{ B.T.U.}$$

From the tables

$$.97\times876.3+308.7-88=1070.7 \text{ B.T.U.}$$

Superheated Steam.—The specific heat of steam at constant pressure was determined by Regnault to be .4805, and at constant volume to be .346. These values have been accepted as correct for pressures and temperatures higher than those used by Regnault in his experiments. Recent experiments show that these specific heats vary with the temperature and with the pressure of the superheated steam. See Fig. 228 and Table XV.

Equivalent Evaporation from and at 212° F.—To say that one pound of a certain coal will evaporate ten pounds of water does not convey exact information, as the amount of heat required to evaporate the water would vary, not only with the initial tem-

perature of the water and the temperature at which it was evaporated but also with the quality of the steam. Otherwise expressed, the same number of B.T.U. would evaporate different weights of water as the circumstances differed. Hence it is usual in boiler trials to reduce the rates of evaporation actually obtained to those that would have been obtained under certain adopted standard circumstances. These are:

1. That the feed-water should be at 212° F.
2. That the above-mentioned feed-water should be converted into dry saturated steam at 212° F.

The heat then would be expended in converting water into steam *from and at* 212° *F.* By reducing the results obtained in all boiler trials to this standard, a result is obtained that expresses the combined efficiency of the coal, the boiler, and the method of firing. It is desirable to separate these factors, but experience will prove that it is difficult to do so.

Problem.—What is the equivalent evaporation if, on a trial, a certain coal evaporated 9 pounds of water from feed at 120° F., the quality of the steam being 97%, boiler pressure 100 pounds per gage?

All the water is raised from 120° to 337.9° F., and then 97% of it is converted into steam at 337.9°. Latent heat = 876.3°.

$$9\{.97\times 876.3+337.9-120\}=1067.9\times 9;$$

$$\frac{96111}{966}=9.95.$$

Ex. 74. Find the heat required to produce one pound of steam at 324° F. from feed at 60° F. The quality of the steam is 97%. What will be the equivalent evaporation from and at 212° F.?

Ex. 75. The efficiency of a boiler is 70%. If coal is burned whose composition is C = 86, H = 8, O = 4, how many pounds of steam, quality 98%, will be made per pound of coal from feed at 180° F.? What is the equivalent evaporation?

Ex. 76. Given one pound of wet steam at 358° F., quality 97%, how many B.T.U. will be required to superheat the steam 75° F.?

Ex. 77. What is the equivalent evaporation per pound of combustible if, on a test, there is 10% ash and one pound of coal is found to evaporate 9 pounds of water from feed at 100° into superheated steam at 400° F., boiler pressure being 120 pounds, gage?

Methods of Determining Dryness of Steam.

1. **By the Barrel Calorimeter.**—This method is theoretically but not practically accurate. The steam to be tested is conveyed by a pipe (the lower end of which is perforated with small holes) to the bottom of a barrel that rests on platform scales. The perforations in the pipe prevent bursting the barrel by a too free admission of steam. The water on being heated by the steam must be stirred, if necessary, to obtain water of uniform temperature.

Let W_1 = the initial weight of cool water and t_1 its temperature. If t_2 is its final temperature,

$$W_1(t_2-t_1) = \text{increase of heat.}$$

If x = the quality of the steam added,
W_2 = final weight of mixture,
W_2-W_1 = weight of wet steam added,
L_3 = latent heat of steam at given pressure,
t_3 = temperature of steam at given pressure,
$(W_2-W_1)(xL_3+t_3-t_2)$ = heat lost by the steam,

$$W_1(t_2-t_1) = (W_2-W_1)(xL_3+t_3-t_2).$$

The quality of the steam,

$$x=\frac{1}{L_3}\left(\frac{W_1(t_2-t_1)}{W_2-W_1}-t_3+t_2\right),$$

or more accurately, use

h_1, h_2, h_3 for t_1, t_2, and t_3.

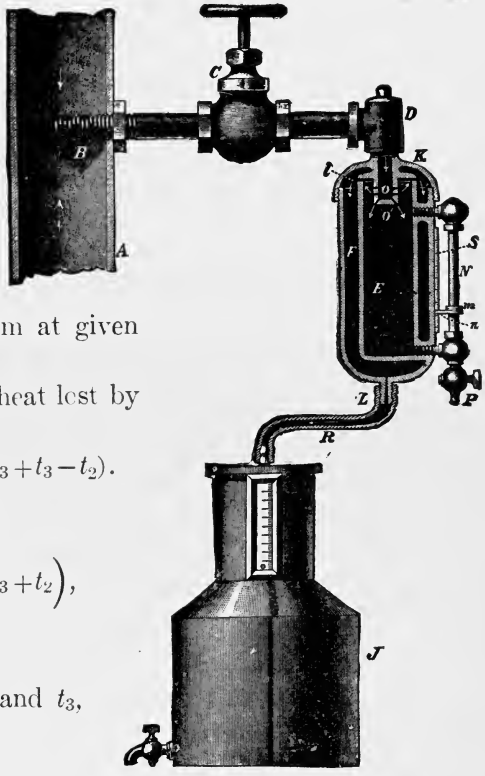

FIG. 107.—The Separator Calorimeter.

For example, suppose steam is run into a barrel of water weighing 200 pounds at 60° F. The final weight is 208.5 pounds at 105° F. Boiler pressure is 85 pounds gage, and the corre-

sponding temperature is 327°.6 F. What is the quality of the steam?

$$200(105-60)=(208.5-200)(x884+327-105).$$

$$x=94.8\%.$$

2. **Carpenter's Separating Calorimeter** (Fig. 107).—The amount in pounds of dry steam (at P pounds per square inch absolute) that will flow through an orifice of A square inches area is $\frac{PA}{70}$ (Napier's formula). The amount of dry steam that will flow through a given orifice in a given period—ten minutes, for instance—can be determined by trial or can be calculated and tabulated for various pressures. If wet steam flows through a separator for a period of ten minutes the amount of dry steam escaping through the orifice may be taken from the table and the amount of water that was separated from the steam may be weighed or calculated from its volume. The Carpenter calorimeter depends upon the above principles.

3. **Barrus Continuous-water Calorimeter.**—If the wet steam is made to flow through a surface condenser it will give up all its heat to the cooling-water. The weight of the cooling-water, W_1, multiplied by (h_2-h_1), corresponding to its rise of temperature (t_2-t_1), must equal the heat lost in the same time by the W_3 pounds of wet steam at t_3° F., that flowed through the calorimeter and issues as water at t_4. Therefore

$$W_3(xL_3+h_3-h_4)=W_1(h_2-h_1).$$

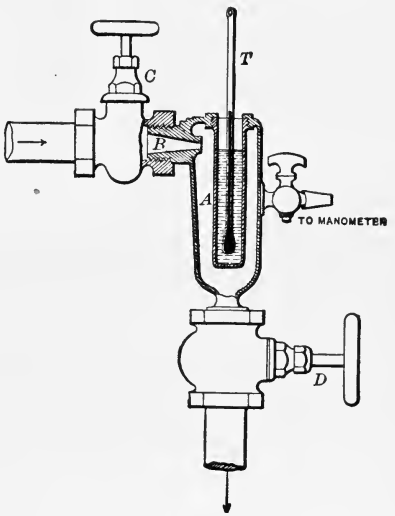

FIG. 108.—Carpenter's Patent Throttling-calorimeter.

4. **The Throttling-calorimeter** (Fig. 108) was invented by Prof. C. H. Peabody. As will be seen below it is the only form recommended by the Committee on Standards. Steam at high pressure contains more heat than an equal weight of steam at low pressure. When steam is allowed

to expand suddenly from a high to a low pressure, forming eddies and doing no useful work, the excess of energy or heat must be taken up in some manner. If the steam at high pressure contains

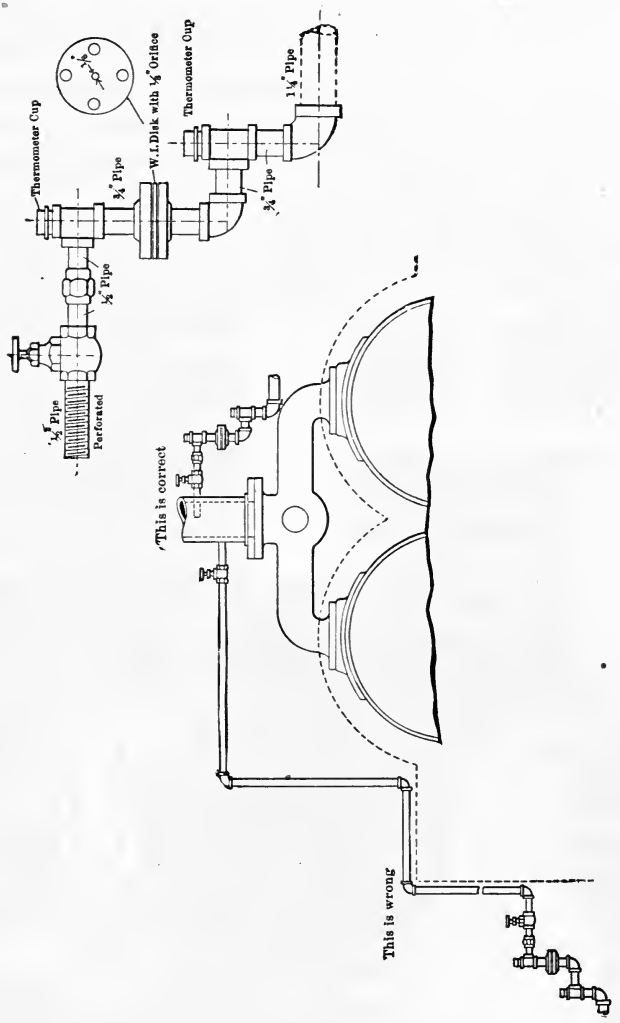

Fig. 109.

any moisture the first effect is to convert the moisture into steam at the lower pressure. If there is still an excess of heat, then all the steam at the lower pressure will be superheated until the excess is absorbed.

In Fig. 108 the steam passes through the sampling-nozzle

(screwed into the main steam-pipe and the valve C) into the chamber A. Ordinarily the exit to A is so great that the pressure therein is that of the atmosphere. If the exit be throttled in any way the pressure is shown on the U tube or manometer, which is filled with mercury to the zero-points before attachment to A.

In preceding discussions we let x = the quality or dryness of the steam. In this case we shall let

y = per cent of moisture present;

T_1 = temperature of the moist steam;

h_1 and L_1 = heat of liquid and latent heat corresponding to T_1;

T_2 = temperature corresponding to manometer pressure;

h_2 and L_2 = heat of the liquid and latent heat corresponding to T_2;

T_s = temperature of steam as shown by the thermometer in the well screwed in the chamber A, where the steam is expanding freely.

Then $h_1+(1-y)L_1$ = heat to produce the moist steam.

$$h_2+L_2+.48(T_s-T_2) = \left\{\begin{array}{l}\text{heat in the steam after expansion}\\ \text{in the well.}\end{array}\right.$$

If T_s is not greater than T_2 the instrument cannot be used, as it does not give utilizable readings.

$$h_1+(1-y)L_1 = h_2+L_2+.48(T_s-T_2).$$

$$1091.7+.305(T_1-32)-yL_1 = 1091.7+.305(T_2-32)+.48(T_s-T_2).$$

$$\therefore \quad \frac{.305(T_1-T_2)-.48(T_s-T_2)}{L_1} = y.$$

Ordinarily T_2 is taken from the tables by finding the temperature corresponding to the sum of the atmospheric and manometer pressures. The Standard Rules given below do not permit this, since T_s is taken with a thermometer that is subject to radiation and other errors, and further it does not allow for the radiation of the chamber A, which may be considerable even when well covered.

To correct for these errors a *Normal Reading* is necessary. Either before or after the test, take steam through the end hole of the nozzle only, from a horizontal pipe, containing quiescent steam at constant pressure. This steam is, in all probability, dry

and the calorimeter should give such a value for T that the value of y should $=0$. Instead of this it gives some other value, T_n. We know that y should $=0$, therefore $.305(T_1-T_2)-.48(T_n-T_2)=0$.

$$.305(T_1-T_2)=.48(T_n-T_2).$$

Therefore the true value of y corrected for indicator errors and radiation errors is

$$\frac{.48(T_n-T_2)-.48(T_s-T_2)}{L_1}=\frac{.48(T_n-T_s)}{L_1}=y=\frac{T_n-T_s}{\frac{L_1}{.48}}.$$

Determination of the Water Equivalent of the Calorimeter.—All instruments have to be calibrated to determine their error under the conditions in which they are used. They absorb heat if they are heated, and they radiate a part of the heat that they absorb. There are three ways of allowing for these effects:

A. Compute from the known weights of the apparatus and the specific heats of the materials the quantity of heat absorbed. Let C_1, C_2, C_3 be the specific heats, and W_1, W_2, W_3 be the weights of the component materials of the apparatus and K the water equivalent per degree variation,

$$K=C_1W_1+C_2W_2+C_3W_3.$$

B. By drawing into the apparatus that has acquired a constant temperature by being exposed to water at a definite temperature, a certain amount of weighed warm water and measuring the resulting temperature after equilibrium has been established.

Let W_1 = the weight of the apparatus;
W_2 = the weight of the water;
T_3 = the original temperature of the apparatus;
T_1 = temperature of the warm water drawn in;
T_2 = the final temperature of water and apparatus.

Then $$W_2(T_1-T_2)=CW_1(T_2-T_3)=K(T_2-T_3).$$

$$K=W_2\frac{(T_1-T_2)}{T_2-T_3}.$$

C. By taking steam from a boiler under steam-pressure, but at rest. The steam is therefore dry. The variation of the calculation will therefore be due to the instrument. (See Normal Reading.)

Ex. 78. What is the quality of steam shown by a Carpenter calorimeter if 4.45 pounds of dry steam escape from the orifice and 1.15 pounds of water are separated out? What is the diameter of the orifice if the run is 25 minutes long and the pressure is 81.5 pounds gage?

Ex. 79. An experiment with the Carpenter calorimeter gave the following data: Duration of run, 25 minutes; gage pressure, 78.2 pounds; water separated out, 0.15 pound; dry steam escaping, 5.20 pounds. Find size of orifice and quality of the steam.

Ex. 80. If the steam escaping from the two preceding examples gave readings 281° F. and 281.3° F. as the temperatures in a Peabody throttling-calorimeter, find the quality of the exhaust-steam.

Quality of Steam.—* "When ordinary saturated steam is used, its quality should be obtained by the use of a throttling-calorimeter attached to the main steam-pipe near the throttle-valve. When the steam is superheated, the amount of superheating should be found by the use of a thermometer placed in a thermometer-well, filled with mercury, inserted in the pipe. The sampling-pipe of the calorimeter should, if possible, be attached to a section of the main pipe having a vertical direction, with the steam passing upward, and the sampling-nozzle should be made of a half-inch pipe having at least twenty one-eighth inch holes in its perforated surface. The readings of the calorimeter should be corrected for radiation of the instrument, or they should be referred to a "normal reading," as pointed out below. If the steam is superheated, the amount of superheating should be obtained by referring the reading of the thermometer to that of the same thermometer when the steam within the pipe is saturated, and not by taking the difference between the reading of the thermometer and the temperature of saturated steam at the observed pressure as given in a steam-table.

"If it is necessary to attach the calorimeter to a horizontal section of the pipe, and it is important to determine the quantity

* Standard Rules. A. S. M. E.

of moisture accurately, a sampling-nozzle should be used which has no perforations, and which passes through a stuffing-box applied to the bottom of the pipe, so that it can be adjusted up and down, and thereby draw a sample at different points ranging from the top to the bottom. By this means the character of the steam in the lower portion of the pipe, where it contains the most moisture, can be determined, and especially that at the very bottom, where there is usually more or less water being carried along the pipe. If, by preliminary test, water is found at this point, we recommend that a drip-pipe be attached a short distance in front of the calorimeter, the end of the drip being below the level of the bottom, and a sufficient quantity of steam be drawn off, while the trial continues, to remove the water and cause the calorimeter to show dry steam at whatever height the sampling-nozzle is adjusted. The quantity of water and steam thus drawn off should be determined by passing it under pressure through a separator, weighing the water after cooling it, and the steam after condensing. If the amount of water on the bottom of the pipe is so excessive that it cannot be removed by this means, or in cases where the main pipe is vertical and the calorimeter shows that the percentage of moisture varies widely, sometimes exceeding three per cent, we recommend that a separator should be introduced before making a test, so as to free the steam of all moisture that it is possible to remove, the calorimeter being attached beyond the separator.

"To determine the 'normal reading' of the calorimeter, the instrument should be attached to a horizontal steam-pipe in such a way that the nozzle projects upwards to near the top of the pipe, there being no perforations and the steam entering through the open end. The test should be made when the steam in the pipe is in a quiescent state, and when the steam-pressure is constant. If the steam-pressure falls during the time when the observations are being made, the test should be continued long enough to obtain the effect of an equivalent rise of pressure. When the normal reading has been obtained the constant to be used in determining the percentage of moisture is the latent heat of the steam at the observed pressure divided by the specific heat of superheated steam at atmospheric pressure, which is .48.

To ascertain this percentage, divide the number of degrees of cooling by the constant and multiply by 100.

"To determine the quantity of steam used by the calorimeter in an instrument where the steam is passed through an orifice under a given pressure, it is usually accurate enough to calculate the quantity from the area of the orifice and the absolute pressure, using Rankine's well-known formula for the number of pounds which passes through per second; that is, absolute pressure in pounds per square inch divided by 70 and multiplied by the area of the orifice in square inches. If it is desired to determine the quantity exactly, a steam-hose may be attached to the outlet of the calorimeter and carried to a barrel of water placed on a platform scale. The steam is condensed for a certain time and its weight determined, and thereby the quantity discharged per hour."

Ex. 81. The mean boiler pressure during a test was 155 pounds by the gage, the barometer reading was 29.5 inches of mercury, the mean thermometer reading of boiler steam was 367.1° F. The pressure in the manometer was equal to 6 inches of mercury and 3 inches of water-pressure. The same thermometer that was used in determining the temperature of the boiler steam read 272° F. in the expansion-chamber. What was the quality of the steam?

Ex. 82. Assume the data for calibrating the thermometers used in determining the quality of steam.

CHAPTER VII.

MEASUREMENT OF HEAT LOSSES.

Quality of Steam in the Cylinder.—The amount of dry steam in a cylinder of a steam-engine at the point of cut-off is only 50 to 90 per cent of the steam actually admitted. It is extremely important to account for the differences between the amount of steam admitted and that present at cut-off, because the economy of a steam-engine is fairly well measured by the number of pounds of feed-water that are required per horse-power. Commencing at the boiler, we may have—

A. Wet steam delivered by the boiler.
B. Condensation in the steam-pipes.
C. Leaky steam-valves.
D. Condensation of the steam in the cylinder.
E. Leaky piston.
F. Condensation due to radiation of heat from the cylinder.
G. Condensation due to the performance of work during expansion.

A. *Quality of Steam Supplied by the Boiler.*—A boiler is said to give wet steam when there is an intimate mixture of the water and steam. The boiler is said to be foaming or priming when the water is carried into the steam-pipe in solid masses. A boiler may furnish dry steam for months and then start foaming. This may be due to—

1. Bad feed-water. Feed-water containing soap, oils, salt, mucilaginous matter, or certain vegetable ferments will foam.
2. The heating-surfaces of the boiler may become coated with oil from too free use of oil in the engine. This applies, of course, only to surface-condenser engines from which the

condensed steam is returned to the boiler. New boilers and boilers using condensed steam from recently erected steam-heating systems will foam till the oil is worked out of the system.

3. Sudden reductions of pressure in the boiler. These may be caused by the engine taking larger volumes of steam per stroke than the boiler can properly supply. If the steam-pressure falls greatly and the engine cut-off is proportionally lengthened to keep up the number of revolutions, foaming may result.

4. A change in the boiler design, so that a bad circulation of the water in the boiler is obtained instead of a good one.

If a new boiler continues foaming after the oil has been worked out of it, the trouble is generally due to faulty design. The trouble may be due to—

a. Bad circulation of the water. This may be due to faulty placing of the tubes or faulty movement of the hot gases. Retarders were placed in the central tubes of a vertical boiler that had always given dry steam, and it foamed till they were removed.

b. Improper method of collecting the steam for the steam-pipe. Where the steam-pipe opening is only a foot or so above the water in a boiler, the surface of that water will not be level, but will curve up towards the opening. The lessening of the static pressure at that point, owing to the high steam velocity, will cause the presence of more steam-bubbles in the water at that point than elsewhere. The bursting of rising steam-bubbles will cause the spray to be carried by the rapidly moving steam into the steam-pipe. A well-drained collecting-pipe, nearly as long as the boiler and having its upper surface perforated for its entire length with numerous small holes whose total area is considerable in excess of the cross-section of the steam-pipe, should be used.

All the causes of foaming may be reduced to—

1. The water temperature is too high for the pressure that exists in the boiler at that instant. To check foaming, cool

the water by opening furnace or connection doors; by putting on a heavy feed; by increasing the pressure by partially closing the throttle or the stop-valve on the foaming boiler in a battery of boilers. If the water disappears from the glass gage, start the foaming again by raising a safety-valve or opening the throttle to keep the tubes cool and put on a heavy feed.

2. *Formation of Steam-bubbles of Abnormal Size.*—Any ingredient in the water that adds strength to the bubble-envelope, or any mechanical formation that allows the bubble to grow in size before its detachment from the heating-surface, is conducive to foaming. Feed and blow till the ingredients are washed out of the boiler, or add other ingredients that will reduce the envelope strength. In boiling sugar solutions, tallow is added for this purpose.

B. *Condensation in the Steam-pipe.*—The amount of heat lost by an uncovered steam-pipe is considerable. It varies with—

1. The extent of the uncovered area.
2. The temperature and rapidity of movement of the outside air.
3. The temperature of the steam.
4. The character of the steam.

Ordinarily the number of B.T.U. lost is expressed by the formula

$$CA(T_1 - T_2),$$

where C is a constant = 2.5 B.T.U. per hour per square foot (approximately), T_1 and T_2 are the temperatures of the steam and air respectively, and A is the exposed area of the pipe in square feet.

Perfectly dry steam is a very poor conductor of heat, and it has been found that pipes carrying superheated steam do not lose the same amount of heat that they would lose if carrying saturated steam of the same temperature. The presence of a slight film of water on the inside of the pipe is an active agent in the transfer of heat and therefore affects the value of the constant C in exact determinations.

Whilst the loss of heat in small pipes is less in amount than in pipes of large diameter, the percentage loss is enormously greater. This arises from the fact that the exposed area varies with the

diameter, whilst the amount of heat passing through the pipe varies with the cross-section of the pipe or the diameter squared.

The value of non-conducting covering depends upon—

1. Its non-conducting quality.
2. Its permanence.
3. Its inflammability or heat-resisting qualities.
4. Its solubility or water-resisting quality.
5. Its corrosive effects upon the pipe.
6. Its bulk and general appearance.

TESTS OF COMMERCIAL STEAM-PIPE COVERINGS.

The following results were obtained by G. M. Brill, and were reported in the Trans. A. S. M. E., Vol. XVI. The heat loss was determined by the condensation in an 8″ steam-pipe 60′ long. Steam-pressures varied from 109 to 117 pounds gage, the air-temperature varied from 58° to 81° F. The difference in temperature at the two sides of the heating-surface varied from 263° to 286° F., averaging 272° F.

Kind of Covering.	Thickness of Covering, Inches.	Pounds of Steam Condensed per Sq. Ft. per Hour.	B.T.U. per Sq. Ft. per Minute.	B.T.U. per Sq. Ft. per Hour per Degree Difference of Temp.	Pounds of Steam per Hour per Sq. Ft. Saved by the Covering.	Ratio of Heat Lost. Bare to Covered Pipe in Per Cent.	H.P. Lost per 100 Sq. Ft. of Pipe (30 Lbs. per Hour = 1 H.P.).
Bare pipe	....	.846	12.27	2.706	....	100.0	2.819
Magnesia	1.25	.120	1.74	.384	.726	14.2	.400
Rock wool	1.60	.080	1.16	.256	.766	9.5	.267
Mineral wool	1.30	.089	1.29	.285	.757	10.5	.297
Fire felt	1.30	.157	2.28	.502	.689	18.6	.523
Manville sectional	1.70	.109	1.59	.350	.737	12.9	.564
Manv. sect. and hair-felt	2.40	.066	0.96	.212	.780	7.8	.221
Manv. wool-cement	2.20	.108	1.56	.345	.738	12.7	.359
Champion mineral wool	1.44	.099	1.44	.317	.747	11.7	.330
Hair-felt	0.82	.132	1.91	.422	.714	15.6	.439
Riley cement	0.75	.298	4.32	.953	.548	35.2	.993
Fossil meal	0.75	.275	3.99	.879	.571	32.5	.916

The non-conducting quality depends upon the porosity and not upon the material of the non-conductor. In other words, the more air there is entrained in the pores of the material the better the non-conducting qualities. If from any cause the covering becomes more dense its non-conducting quality becomes less. For instance, wetting ruins some non-conductors that otherwise are excellent. Glass wool after a time breaks up into a dense powder and so loses in value. The situation of the steam-pipe

to be covered is a prime factor in the choice of the covering. The intense heat in the confined space over a boiler would prevent the use of a covering that would be suitable for pipes that are subject to occasional wetting. The chemical action of the constituents of the covering when damp must be considered to prevent pipe corrosion. On p. 183 are tabulated some tests of commercial steam-pipe coverings.

The following results were obtained by C. L. Norton of the Mass. Manufacturer's Mutual Fire Insurance Co.:

Name of Covering.	Thickness in Inches.	Weight in Ounces per Square Foot.	Temperature Corresponding to 10 Pounds Steam-pressure.		Temperature Corresponding to 200 Pounds Steam-pressure.	
			B.T.U. Loss per Sq. Ft. of Pipe per Minute.	Ratio of Heat Loss to Loss from Bare Pipe.	B.T.U. Loss per Sq. Ft. of Pipe per Minute.	Ratio of Heat Loss to Loss from Bare Pipe.
Nonpareil cork	0.90	21	1.44	0.232	3.04	.254
Magnesia	1.12	24	1.59	.262	3.40	.284
Air-cell No. 1	1.12	23	....	....	3.58	.300
Air-cell No. 2	1.25	36	1.58	.261	3.40	.284
Magnabestos	1.12	48	2.32	.383	3.84	.321
Fire felt	1.00	46	2.4	.395	3.99	.333
Caleite	1.25	29	....	....	5.02	.423
Bare pipe	....	..	6.06	1.000	11.96	1.000

When the difference of temperatures is small the B.T.U. transferred per degree difference of temperature is also decreased.

Cooling of Water in Pipes Exposed to Air.

	2″ Wrought-iron Pipes.				4″ Cast-iron Pipes.			
Difference of temperature	103°.7	49°.4	25°.41	4°.3	52°.3	45°.8	33°.9	27°.3
Heat emitted per 1° F. difference of temperature per hour	2.25	2.11	1.83	1.39	1.59	1.53	1.46	1.40

All steam-pipes should drain in the direction of the moving steam and should be free of pockets where water may lodge. It is almost impossible to prevent leakage from pipe-joints if water lies in the bottom of the pipes. Moving steam will carry water against a very considerable adverse pitch. Notwithstanding the fact that the water should drain towards the engine, none should be allowed, under any circumstances, to enter the engine, as it is certain to lower the economy (see p. 187). Similarly, all receivers in multiple-expansion engines should be drained

and the water wasted rather than let it enter the following cylinder. To separate the water and steam, use may be made of any efficient separator. The essential principles of a good separator consist in giving a whirling motion to the steam to throw the water outwards by centrifugal force and then preventing the water so thrown out from entering into the moving body of steam again. Fig. 5 shows one form of separator. The steam enters at *A*, whirls in the direction of the arrows and passes out at *B*. The amount of entrained water is shown by the sight-glass *C*. This water may be automatically trapped out and sent to the hot-well with the rest of the feed-water.

It is necessary to afford the same support to a hot pipe as to a cold one. Frequently the expansion of the vertical part of a pipe will lift parts of the horizontal portion of the pipe-line from intended supports. All movement of the pipe should be calculated and proper allowances made.

Ex. 83. What will be the probable saving per annum, if coal is worth $3.00 per ton, in covering (with magnesia 1.25 inches thick) a 6-inch pipe 300 feet long; boiler pressure 100 pounds gage; average outside temperature 50° F.; boiler used 14 hours per day, 300 days in the year?

Ex. 84. Assume that any given covering will last five years, how much may be paid without loss for a covering 2 inches thick (allowing 8% for repairs and interest and 15% for depreciation) on a 12-inch pipe-line 1000 feet long, carrying steam at 150 pounds pressure; average outside temperature = 50° F.; plant runs continuously; coal $3.00 per ton, labor 50 cents per ton of coal?

Ex. 85. Sketch a pipe-line connecting five compound engines of 1000 H.P. each to a battery of boilers of 300 boiler horse-power each. The nearest boiler is 15 feet below and 300 feet distant from the nearest engine. Steam-pressure 165 pounds gage, engines use 15 pounds water per H.P. Assume other quantities needed.

C. *Leaky Steam-valves.*—The steam may leak directly into the exhaust cavity and so tend to raise the back pressure and thus produce a double loss, or, in some constructions, it leaks into the cylinder during expansion. The leakage, of course, will be greatest when the piston is near the end of its stroke and the steam-pressure is lowest. It is easy to see that there will be a loss, but the magni-

LIBRARY

tude of such loss is only appreciated by those who know the amount of steam that will pass through an almost insignificant opening.

D. *Condensation of the Steam during Admittance.*—By the use of a *dry-pipe* to collect the steam in the boiler for the steam-nozzle, and by the use of well-lagged steam-pipes, the amount of condensation may be reduced, ordinarily to a small percentage of the feed-water, and this amount is readily taken out by an efficient separator. We can therefore easily give dry steam to the engine. Leaky valves and pistons present mechanical difficulties that are not difficult to overcome. We now come to a problem of different character. For clearness, let us deal with the events that take place on one side of the piston only and we shall call the stroke in which the steam drives the piston the forward stroke and the stroke in which the piston drives the steam out of the cylinder the return-stroke. To be concrete, let us take an engine exhausting into the atmosphere, using steam at 80 pounds absolute, temperature 312° F. As the piston starts on its forward stroke, steam at a temperature of 312° F. is entering a volume the walls of which were exposed during the whole of the previous stroke to steam at a temperature of 212° F. The difference of 100° in temperature is greater than the ordinary difference between a hot summer day and a cold day in winter.* The immediate result of the contact of the hot steam and relatively cool walls is the condensation of enough steam to heat the walls (to a depth that probably does not exceed 1/50 of an inch) to the temperature of the incoming steam. The thickness of the film of water may not exceed a few thousandths of an inch, but the detrimental effect on the engine economy is very considerable. From 20 to 50 per cent of the weight of the entering steam is condensed to form this apparently inconsiderable film and to heat the inner wall to such a small depth.

Let us make a few rough calculations for a 20″×24″ cylinder without clearance, steam-pressure 80 pounds per square inch absolute, cutting off at one-quarter stroke, and suppose the steam

---

* Later we shall show, however, causes that will prevent the walls from sinking in temperature, in this case to 212° F.

shown by the card at cut-off is 75 per cent of the steam actually admitted:

Volume at cut-off. . . . . $6 \times 3.14 \times 100 = 1884$ cu. in.
Weight of steam present. . . . . $1884/1728 \times .1843 = .201$ pound
Weight of steam admitted. . . . . $.201 \times 4/3 = .268$ pound
Weight of steam condensed. . . . . $.268 - .201 = .067$ pound
Volume of condensed steam. . . . . $.067/.036 = 1.86$ cu. in.
Area of internal surface. . . . . $314 + 314 + 376.8 = 1008.8$ sq. in.
Thickness of film. . . . . $1.86/1008.8 = .0018$ in.
Heat given up by cond's'd steam. $895 \times .067 = 60$ B.T.U.

Assume weight of cast iron .26 pound per cu. in.;
" specific heat of cast iron .13;
" rise in temperature 100° F.;
" thickness of metal affected $= d$.;
Then $(1008 \times d \times .26)(.13 \times 100) = 60$ B.T.U.;
hence $d = 1/55$ inch approx.

For reasons given hereafter the assumed range of 100° is probably too high and we have only considered the area up to cut-off. The calculations are only intended to give approximate values, as other variables will be found to enter the problem.

After cut-off the temperature of the expanding steam decreases with the decreasing pressure. Therefore after cut-off the part of the cylinder that is being uncovered by the moving piston does not have to be heated to the same temperature that was required for the part exposed before cut-off. At some point after cut-off, then, condensation ceases and re-evaporation starts, since the walls are now hotter than the steam. If we have an accurate card from an engine whose clearance volume, diameter, and stroke are known, we may easily find the weight of steam present at cut-off and for various points on the expansion-curve. The re-evaporation, while not considerable, is greatest near the end of the stroke where its usefulness in driving the piston amounts to little. But the moment that the exhaust-valve opens and there is a considerable drop in pressure (and the corresponding temperature), re-evaporation and the consequent cooling of the walls proceeds rapidly. It may probably be taken for granted that steam of any degree of wetness (short of actual foaming) on entering a cylinder will be exhausted

as practically dry steam. The heat so taken from the walls must be returned by the condensation of an appropriate amount of the dry steam that enters for the next stroke. Hence the economy of separating the steam and water before the steam enters the cylinder.

Considering only the facts brought out in this article, we note that:

1. The condensation and re-evaporation would go on in a cylinder clothed in a perfect non-conductor.

2. With an imperfect non-conducting covering there would be an additional loss of heat and consequent increase of condensation to supply the heat flowing to the outside of the cylinder, and thence carried away either by conduction or radiation.

3. In any practical case we may consider the cylinder-shell as made of two parts. In the inner (of greater or less thickness in accordance with circumstances yet to be considered) there is a rapid fluctuation of heat from and to the steam, and a regular flow of heat to the outside surfaces of the cylinder.

4. The water of entering wet steam will be re-evaporated at the expense of the dry steam of the next stroke, and that this re-evaporation takes place on the return-stroke and serves only to tend to increase the back pressure. In the case of compound engines, however, this steam does some work in a following cylinder if there is one.

5. In the case of the loss of heat from steam-pipes it was remarked that steam was a poor conductor of heat, and that the presence of a film of water on the surface of the walls had an extremely important influence on the loss of heat. We shall find that, in this case also, the presence or absence of this film modifies results materially. If, by evaporation during exhaust, the walls become free of the film of water, then they cease to fall materially in temperature and may remain at a considerable temperature above that of the exhaust-steam. Their range of temperature is thereby lessened.

At the point of exhaust closure the steam remaining in the

cylinder is not only dry, but may be slightly superheated. If this point be late in the return-stroke the whole compression curve may show evidence of superheating by rising more rapidly than an adiabatic. With a heavier ratio of compression the first part of the curve may rise higher than the adiabatic, owing to the reception of heat from the hotter cylinder walls. With the rising temperature of the steam (from compression) the temperature difference between the walls and compressed steam becomes smaller, the rate of pressure increase is lower, and the compression-curve crosses the curve of dry saturated steam. Further compression raises the temperature of the compressed steam above that of the cylinder walls and condensation ensues. Heat is now lost rapidly by the steam and further compression follows the laws governing the compression of vapors in contact with their liquid. The curious hook *EVG* is produced. In Fig. 110, taken from Thurston on Heat Exchanges within the Steam-engine, let *GVETD'CA* be the compression-curve, *CDH* the adiabatic from any point *C*, *SEI* the saturation-curve from any point *E*, *LM* the temperature-curve if the compression were adiabatic, *MNPR* the actual temperature as shown by calculation from the diagram, and *MPR* the probable temperature of the metal.

The statement has frequently been made that there would be no loss from clearance if compression were carried to the initial pressure. Accurate experiments have shown a slightly increasing water consumption per horse-power with increasing compression when all other quantities were kept constant in the same engine. Theoretically, increasing compression should produce a loss of economy for the following reason. The steam-engine is a mechanism for the conversion of heat into work. No economy can result by changing the expensively obtained work back into heat, since all changes of energy from one form into another are accompanied by loss. As a practical result, in engines designed for economy, clearance surface is reduced to the minimum by placing the valves in the cylinder-heads and only a moderate amount of compression, conducive to smooth running, is used.

6. The amount of condensation will be affected by the size and proportions of the cylinder. Comparing two cylinders (the

linear dimensions of one being twice that of the other), the larger one could perform eight times the work of the smaller, but its internal exposed area would only be four times as great, hence the percentage of condensation would be reduced. Similarly for engines of the same volume, by proper choice of

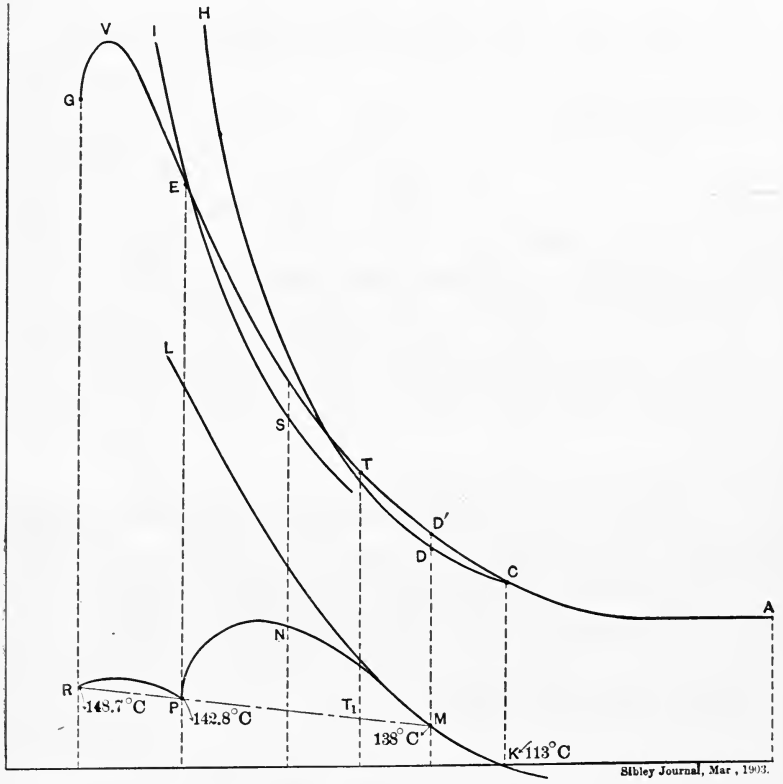

FIG. 110.

dimensions there would be one of minimum exposed internal surface.

7. Other variables also affect the result. We may mention steam-pressure, revolutions, ratio of expansion, and jacketing.

Range of Temperature.—The amount of initial condensation depends upon the range of temperature of the cylinder walls, and

economy follows a reduction of this range. The range is decreased—

1. By a late cut-off. By studying the conditions we note that the part exposed to the initial steam was exposed to the exhaust conditions for a short time only, and more of the surface is at the highest temperature.

2. By the reduction of the amount of water present at cut-off. The walls part readily with their heat to a film of water and less readily to dry steam. Therefore the lower temperature is raised by reducing the amount of water to be evaporated.

3. By reducing the time of exposure. The element of time always affects the amount of heat that may be transferred. By increasing the number of revolutions the time of exposure is diminished.

To Find the Weight of Steam Accounted for by the Indicator-card.—At any point in the stroke, the steam-pressure is due to the amount of *dry* steam present. At any point between admission and cut-off all the steam has not yet entered the cylinder, and after the exhaust opens a large percentage of the steam has left the cylinder. In any case, however, we can determine the weight of *dry steam* present *in the cylinder* at any piston position. From cut-off to exhaust-opening and from exhaust-closure to steam-opening we are dealing with a closed volume and approximately with a constant mass of dry steam. At all other points of the stroke we are dealing with a variable mass of steam and care must be taken in the interpretation of results.

The amount of dry steam present between cut-off and exhaust-opening differs materially from the amount of steam that entered the cylinder before cut-off. The reasons for this become evident when we consider not only the conditions that exist when steam is admitted, but also the exceedingly small volume occupied by the water formed in the condensation of steam. Two cubic feet of steam may readily enter a cylinder whose volume up to the point of cut-off is only one cubic foot. One cubic foot of the steam may condense and form a film about 1/500″ thick on the walls. The volume of this film is, of course, practically negligible.

To obtain the weight of the dry steam present in the cylinder at any point of the stroke we need—

1. The absolute steam-pressure at that point.
2. The absolute volume of the clearance and of the cylinder up to the point considered.
3. Steam-tables that show either the weight of one cubic foot of steam or the volume occupied by one pound weight of steam at the various pressures.

Then to obtain the weight of dry steam present at any point of the stroke either multiply the absolute volume in cubic feet by the weight of the steam per cubic foot, or divide the absolute volume in cubic feet by the volume in cubic feet of one pound weight of steam. Table VIII.

For example, find the weight of dry steam in a $20'' \times 24''$ cylinder at $16''$ from the beginning of the stroke, the pressure at that point being 42 pounds absolute, clearance 10 per cent.

$$\text{Volume} = \frac{(16+2.4)\times 314}{1728}.$$

$$\text{Weight} = \frac{18.4\times 314}{1728\times 9.826} = .32 \text{ pound},$$

or
$$\text{weight} = \frac{18.4\times 314\times .10179}{1728} = .32 \text{ pound}.$$

Analysis of Indicator-diagrams.—Steam accounted for by the indicator-card assumes the following data:

Clearance	$=E$	$=2\%$
Stroke	$=L$	....
Number of strokes	$=N$	....
Cut-off pressure above zero		75.6 lbs.
Weight per cubic foot at cut-off pressure	$=W_c$	$=$ .1773 lbs.
Proportion of stroke completed at cut-off	$=C$	$=$ $.172L'$
Compression pressure		3 lbs.
Weight per cubic foot at compression pressure	$=W_h$	$=$ .0085 lbs.
Proportion of stroke uncompleted at compression	$=H$	$=$ $.048L'$
Mean effective pressure	$=$M.E.P.	$=37.17$ lbs.

The weight of steam as shown by the indicator-card would be per hour per horse-power:

$$M=\frac{\frac{A}{144}[(.172+.02)(L\times.1773)-(.048+.02)(L\times.0085)]N\times60}{\frac{(\text{M.E.P.})LAN}{33{,}000}}$$

Hence the general formula is

$$\dagger M=\frac{13{,}750}{\text{M.E.P.}}[(C+E)W_c-(H+E)W_h].$$

The symbol C may also refer to the proportion of the stroke completed at release, and W_c would be the weight of one cubic foot of the steam at release pressure.

Method of Finding the Dry-steam Fraction.—Let us imagine that we have a boiler of ample capacity in which the steam-pressure is kept absolutely constant. Let us have two engines driving a common shaft whose load is always too great for the engine that is to be used as an experimental engine. Block the cut-off of the latter engine at constant cut-off. The other engine takes steam from a separate boiler and its cut-off varies with the load. The experimental engine may easily be run at constant pressure, load, cut-off, revolutions, and so will give a constant card.

If the experimental engine has a surface condenser the feed-water per stroke may be calculated by weighing the condensed steam. By keeping the water-level constant in the steam-boiler a less accurate measure of the feed per stroke is obtained by weighing the feed-water.

The dry-steam fraction

$$=\frac{\text{Weight of dry steam at any point of the stroke}}{\text{Amount of steam and water present at that point}}.$$

The method of finding the numerator was shown (page 163). To obtain the denominator we must start at the piston position when the exhaust-valve closes. All authorities agree that the steam in the cylinder at the point of exhaust-closure is perfectly dry. Knowing its volume and pressure, its weight can be calcu-

† Standard Rules. A. S. M. E.

lated. At the end of the compression-curve this steam may be either wet, dry, or superheated. Knowing the pressure and volume at that point, the weight of dry steam present can be calculated and if that is less than the amount present at exhaust-closure, it is evident that some steam has been condensed. If the pressure is higher than that called for by the law, $PV=C$, the steam has been superheated. In any case, the amount of steam and water present when the steam-valve opens is equal to the amount of dry steam present at the instant the exhaust-valve closes. If to the amount so found we add the weight of steam and water admitted per stroke (as found by weighing the condensed steam or the feed-water), we obtain the amount of steam and water that is present at any point between cut-off and exhaust-opening.

Hirn's Analysis.—Mons. G. A. Hirn published his Thermodynamics in 1876. In that work he developed a theory of the real engine that has served as the basis for nearly all subsequent work on that subject.

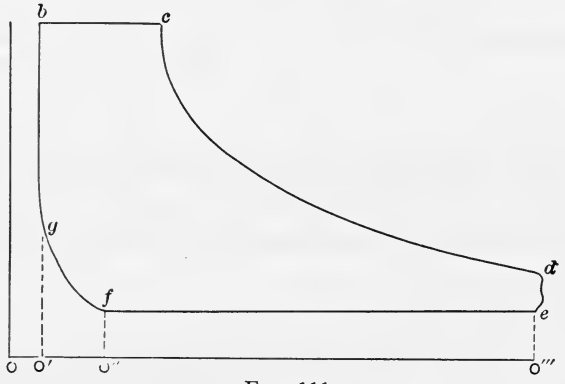

FIG. 111.

In this analysis we endeavor to account for every thermal unit of the steam that passes through the engine. To make such an analysis we must know accurately the volume of the clearance and of the cylinder at the important points of the stroke. The quality of the steam at admission, the pressures, revolutions, and work should be known and must be kept practically constant. All the indicator-cards would then be precisely alike, so that the expenditure of heat and water per stroke multiplied by the number of strokes per hour will give the actual expenditure per hour.

Let V_b = volume of clearance in cu. ft.;
V_c = volume at cut-off in cu. ft.;
V_d = volume at exhaust-opening in cu. ft.;
V_f = volume at exhaust-closure in cu. ft.;
V_g = final volume of compression = V_b;
m = pounds of (mixture) steam and water;
x = quality of mixture;
xm = pounds of steam in the mixture;
$(1-x)m$ = pounds of water in the mixture;
q = heat of the liquid above 32° F.;
ρ = internal latent heat;
E = external latent heat;
L = internal latent heat + external latent heat.

As before, a subscript added to a letter limits its value to the piston position shown by the letter. Thus m_f indicates the weight of steam and water in the cylinder at the instant that the exhaust-valve closes.

The analysis will start at the instant the exhaust-valve closes or at f on the indicator-card. In all ordinary cases all the water that may have been in the cylinder when the piston is at e will be evaporated by the time the piston reaches f. Knowing p_f and V_f we may calculate m_f. We know $x = 100\%$.

At g we know that $m_g = m_f$, as we are dealing with a closed volume. We do not know the condition of the steam, however. Knowing p_g and V_g, we can obtain the amount of *dry* steam present. This is $(x_g m_g)$. The water at g is then $m_f - x_g m_g$. Therefore $x_g = \frac{(x_g m_g)}{m_f}$. In a preceding paragraph it was shown that compressed steam may be either wet, dry, or superheated. This would be shown in the above by $x_g m_g$ being $<$, $=$, or (apparently) $>$ than m_f.

At g the steam-valve opens and the lines gb and bc are made. Calling the weight of steam and water admitted per stroke m. (found from the measurement of the condensed steam), we know that the total weight of steam and water present at c is $m_a + m_f = m_c$. As before, the amount of dry steam present $(x_c m_c)$ can be calculated, as we know p_c and V_c. The value of x_c is $\frac{(x_c m_c)}{m_a + m_f}$. The

quality of the steam admitted x_a must be determined by calorimeter experiments at some point just before the engine-throttle. The weight of steam and water present at exhaust-opening is the same as that at cut-off, and its quality x_d is determined as before.

Heat Interchanges.

Let U_c = the work of compression $o'gjo''$ in B.T.U.;
U_e = the work of expansion in B.T.U.;
U_r = the work of rejection of exhaust = $o''feo'''$ in B.T.U.;
I = the heat given to the cylinder walls in B.T.U.;
H = the heat required to produce one pound of steam.

In discussing heat interchanges we must start at the point of exhaust-closure, as we assume that the steam is dry at that point. This is a very safe assumption, for even if the quality of the clearance steam were only 75%, the amount of steam in the clearance is so small that the percentage effect on final results would be negligible. The amount of heat IN the steam at f on the assumption of dry steam is $m_f(q_f+\rho_f)$.

The amount of heat in the steam and water at g is $m_g(q_g+x_g\rho_g)$. Adding the heat-equivalent of the work of compression to the heat at f, we obtain the heat at g plus the heat given to the cylinder walls. Therefore

$$m_f(q_f+\rho_f)+U_c=m_g(q_g+x_c\rho_g)+I_c,$$

whence the heat given to the cylinder walls, I_c, may be found.

We must discriminate between the heat required to *produce* m_a pounds of steam and the heat *in* m_a pounds of steam. The heat required to produce the m_a pounds of steam that enters the cylinder is

For wet steam, $H_a=m_a(q_a+x_aL_a)$.
" superheated steam, $H_a^s=m_a\{q_a+L_a+0.48(t_s-t_a)\}$,

where t_s-t_a is the rise in temperature due to superheating.

If we add the heat IN the steam and water at the beginning of admission (at g) to the heat required to PRODUCE the steam (wet or superheated) admitted, we obtain the heat *in* the steam at

cut-off + the admission work (in B.T.U.) + the heat given to the cylinder walls during admission. Hence

$$H_a \text{ (or } H_a^s) + m_g(q_g + x_g\rho_g) = m_c(q_c + x_c\rho_c) + U_a + I_a.$$

As I_a is the only unknown it may readily be found.

The weight of steam and water present at cut-off is the same as that present at exhaust-opening. The difference between the amounts of heat in the mixtures at cut-off and exhaust-opening is equal to the work of expansion + the heat given to the cylinder walls. Hence $m_c\{(q_c + x_c\rho_c) - (q_d + x_d\rho_d)\} = U_e + I_e$. If I_e is negative, then the walls have given more heat to the steam during expansion than they have received.

If tests are accurately made on an engine with a surface condenser, the amount of heat sent to that vessel per stroke may be calculated by multiplying the rise in temperature of the cooling-water (more accurately the difference of the corresponding q's) by the weight of that water used per stroke. While it is easy to calculate approximately the exhaust-heat quantities sent to the condenser, it is impossible to give directly an exact measure for the following reason. The water that is in the cylinder is evaporated in varying quantities in the time that the lines *de* and *ef* are made, that is, at varying temperatures. If the fall of pressure, *de*, is not great, it is probable that most of the water is evaporated during the formation of the line *ef*. A check to any calculation is found in the fact that the heat admitted − the work done (B.T.U.) must equal the heat sent to the condenser (neglecting radiation or heat received from a steam-jacket). This is an indirect but exact measure of the heat sent to the condenser or to the atmosphere. Or, H_a (or H_a^s) − the net area of the indicator-card in B.T.U.

$$= H_r, \text{ the heat rejected} = w(q_1 - q_e) + m_a q_s,$$

where w = the pounds of cooling- or injection-water per stroke;

q_e = the heat of the cooling-water above 32° F. as it enters the condenser;

q_l = the heat in the cooling- or discharge-water above 32°F. as it leaves the condenser;

q_s = the heat in the feed-water above 32° F.

In the case of a jet condenser the amount of water leaving the condenser includes the condensed steam as well as the injection-water.

Heat Interchange, I_r, during Exhaust.—We know the weight of steam and water that is present at d, we can calculate its quality x_d, and therefore can calculate the amounts of heat. We have already calculated these quantities for piston position, f. The difference between these two quantities of heat is the heat given to the cylinder walls (negative) + the heat given to the cooling- or injection-water + the heat, q_s, given to the condensed steam above 32° F. Or,

$$m_c(q_d + x_d\rho_d) - m_f(q_f + \rho_f) = I_r + w(q_l - q_e) + m_a(q_s).$$

As all quantities but I_r are known, it may be found.

Jacket-steam.—Each pound of jacket-steam, w_j, gives up L thermal units, as the steam is condensed at constant pressure to its liquid at the boiling-point. The heat given up, w_jL_j, must be added to the heat that is required to produce the m_a pounds of steam admitted. From this sum, subtract the heat-equivalent of the work done to obtain the heat sent to the condenser.

The thermal efficiency is obtained by dividing the net work done per stroke in B.T.U. by the total heat expended to produce m_a pounds of steam (from the temperature of the feed-water) plus the heat given up (w_jL_j) per stroke by the jacket-steam.

Hirn's Analysis.—Work out Hirn's analysis for the following data:

Area of piston, 3 sq. ft.
Stroke, 3 ft.
Clearance, 3.33%.
Steam-pressure, 100 pounds absolute.
Cut-off, 6″ from beginning of stroke.
Exhaust opens at 98% of stroke.
" closes " 95% " "
Back pressure, 15 pounds absolute.

From a test it is found that the dry steam at cut-off is composed of the steam saved by compression and 80% of the steam mixture admitted. Quality of steam at the throttle, 98%. Fig. 111.

Clearance volume, $3\times3\times.033=.3$ cu. ft.

Volume at f, $3\times(3\times.05)+.3=.75$ cu. ft.

Pressure at g, $p_f v_f = p_g v_g$, $\frac{.75\times15}{.3}=37\frac{1}{2}$ pounds.

$V_f=.75$ cu. ft., $p_f=15$ pounds.

Weight of dry steam at $f=.03868\times.75=m_f=.029$ pound dry steam.

$V_g=.3$ cu. ft., $p_g=37.5$ pounds.

Weight of dry steam at $g=x_g m_g=.09151\times.3=.02745$.

Weight at f − weight at g = weight condensed $=.029-.0274=.0016$.

x_g = the per cent of steam $=\frac{.02745}{.029}=94\frac{1}{2}\%$.

To find m_a, the steam and water admitted.

Volume at $c=.3$ cu. ft. $+3\times.5=1.8$ cu. ft.

Weight of dry steam present at c, $1.8\times.2303=.41454$ pound.

" " the above dry steam that was admitted on this stroke $=.41454-.02745=.38709$ pound.

" " dry steam and water actually admitted, $\frac{.38709}{.80}=.483862$ pound.

" " water in mixture admitted, $.02\times.483862=.00968$ pound.

" " dry steam actually admitted, $.483862-.00968=.47418$ pound.

" " steam condensed on admission, $.47418-.38709=.08709$ pound.

" " " and water present at cut-off, $.483862+.029=.512862$ pound.

Heat Exchanges.—Heat at f, the heat actually contained in 1 pound of dry steam at p_f pressure multiplied by the weight of steam:

$$1074.1\times.029=31.1489 \text{ B.T.U.}$$

Heat at g . . . . . $.029\times232.46+.0274\times853.48=30.1693$ B.T.U.

Work of compression, $U_c=\dfrac{p_f v_f \log_\epsilon r}{778}$

$$=\frac{15\times144\times.75\times\log_\epsilon 2.5}{778}= \quad 1.908 \text{ ``}$$

Heat given to walls, $I_c=31.1489+1.908-30.1693=$ 2.8876 ``

Heat admitted $=.4839\times298.09+.47418\times883.773=563.1840$ ``
Adding heat at g. . . . . $=$ 30.1693 ``

593.3533 ``

Subtracting heat present at c

$$=.5128\times298.03+.41454\times803.108=485.7478 \text{ ``}$$

107.6055 ``

Subtract external work. . . . . $\dfrac{100\times144\times1.5}{778}=$ 27.76 ``

Heat given to the walls, I_a. . . . . 79.845 ``

$$p_d=\frac{1.8\times100}{9.3}=19.35 \text{ pounds.}$$

$$r=\frac{9.3}{1.8}=5.17.$$

Weight of dry steam present at $d=9.3\times.0495=.46035$ pound.

Work during expansion $=\dfrac{100\times144\times1.8}{778}\log_\epsilon 5.17=U_e$

$=54.735$ B.T.U.

Heat at $d=.51286\times195.28+.46035\times882.36=506.3535$

$-506.3535+485.7478-54.735=-76.3407=I_e=$heat

GIVEN UP by the walls during expansion.

The data of this problem were assumed. The student will find the heat that is wasted and determine if any change should be made in the data.

Steam Consumption.—The actual consumption of steam by engines is a very variable quantity. It varies with the style of engine, its load, its speed, and a number of other quantities. As important as any cause is the amount of leakage past worn valves or pistons. Much that is called initial condensation is really leakage. In an engine in good condition probably one-third of its so called initial condensation is leakage. For comparison, we give two tables and their corrections, as given by Helm in *The Engineer,* and the results of actual tests on engines as they were in daily use. (Paper by Dean and Wood, A.S.M.E., June, 1908.)

The ideal consumption of steam per horse-power (S.P.H.) for non-condensing engines of the *four-valve* and *Corliss* types, with a back pressure of 16 pounds absolute is given in Table C. To this must be added the following corrections for initial condensation:

For 80 pounds initial pressure the following amounts should be added to those given in Table C for non-condensing engines:

TABLE A.

For 2	expansions	3.65	pounds
" 3	"	4.10	"
" 4	"	5.45	"
" 5	"	6.70	"
" 6	"	7.90	"
" 8	"	9.80	"
" 9	"	11.20	"
" 10	"	12.35	"
" 12	"	14.80	"
" 15	"	18.60	"
" 16	"	21.50	"

For condensing engines increase the quantities given in Table D by the following quantities based on an initial pressure of 125 pounds.

TABLE B.

For 2	expansions	3.28	pounds
" 3	"	3.60	"
" 4	"	4.62	"
" 5	"	5.57	"
" 6	"	6.35	"
" 7	"	7.35	"
" 8	"	7.45	"
" 9	"	8.25	"
" 10	"	9.75	"
" 12	"	9.80	"
" 15	"	10.80	"
" 16	"	11.70	"
" 18	"	12.60	"
" 20	"	13.30	"

TABLE C.

STEAM CONSUMPTION AND MEAN EFFECTIVE PRESSURE FOR NON-CONDENSING ENGINES.

Gage Pressure.	Absolute Pressures.	Weight of One Cubic Foot of Steam.		Expansions in all Cylinders. Non-condensing—Computed at 16 Lbs. Absolute Back Pressure.																	
				1	2	3	4	5	6	7	8	9	10	12	15	16	18	20	24	28	32
80	95	0.2198	M.E.P.	79.	64.42	50.45	40.67	33.57	28.2	23.97	20.65	17.74	15.37	11.58	7.48	6.39	4.53	2.97	0.53	−1.30	−2.75
			S.P.H.	38.25	23.3	19.96	18.58	18.	17.85	18	18.38	18.95	19.65	21.75	26.95	37.1	50.50				
90	105	0.2414	M.E.P.	89	72.88	57.45	46.64	38.79	32.85	28.18	24.41	21.3	18.67	14.49	9.95	8.75	6.69	4.97	2.27	0.24	−1.36
			S.P.H.	37.3	22.7	19.25	17.75	17.12	16.8	16.79	16.95	17.31	17.8	19.1	22.22	23.7	27.5	33.3	60.75		
100	115	0.2628	M.E.P.	99.	81.35	64.44	52.6	44.01	37.5	32.39	28.26	24.85	21.97	17.39	12.42	11.11	8.88	6.97	4.02	1.79	0.04
			S.P.H.	36.5	22.15	18.69	17.17	16.42	16.06	15.94	15.98	16.16	16.45	17.39	19.39	20.32	22.61	25.92	37.45		
110	125	0.2845	M.E.P.	109.	89.81	71.44	58.57	49.23	42.16	36.6	32.11	28.4	25.28	20.3	14.9	13.47	11.01	8.97	5.76	3.33	1.43
			S.P.H.	35.88	21.78	18.25	16.67	15.88	15.45	15.27	15.23	15.31	15.47	16.05	17.5	18.15	19.75	21.8	28.3	41.96	85.7
120	135	0.306	M.F.E.	119.	98.28	78.43	64.53	54.45	46.81	40.8	35.96	31.95	28.58	23.2	17.37	15.83	13.17	10.97	7.5	4.88	2.83
			S.P.H.	35.35	21.42	17.88	16.3	15.46	14.98	14.73	14.62	14.63	14.75	15.12	16.15	16.62	17.76	19.18	23.36	30.75	45.5
125	140	0.3162	M.E.P.	124.	102.51	81.93	67.52	57.06	49.14	42.91	37.88	33.73	30.23	24.65	18.6	17.	14.25	11.96	8.37	5.65	3.53
			S.P.H.	35.05	21.67	17.70	16.11	15.24	14.75	14.47	14.35	14.32	14.37	14.7	15.57	15.97	16.95	18.16	21.72	27.35	38.4
130	145	0.3273	M.E.P.	129.	106.74	85.43	70.5	59.67	51.46	45.01	39.81	35.51	31.88	26.1	19.84	18.18	15.33	12.96	9.24	6.43	4.23
			S.P.H.	34.88	21.08	17.57	15.95	15.07	14.57	14.28	14.13	14.08	14.12	14.36	15.12	15.52	16.31	17.35	20.28	25.	33.2
140	155	0.3484	M.E.P.	139.	115.21	92.42	76.46	64.89	56.12	49.22	43.66	39.06	35.19	29.01	22.31	20.54	17.5	14.96	10.98	7.97	5.63
			S.P.H.	34.45	20.8	17.28	15.67	14.76	14.22	13.92	13.72	13.63	13.62	13.77	14.32	14.58	15.22	16.01	18.18	21.8	26.6
150	165	0.3695	M.E.P.	149.	123.68	99.42	82.43	70.11	60.77	53.43	47.51	42.61	38.49	31.91	24.78	22.9	19.66	16.96	12.72	9.52	7.02
			S.P.H.	34.09	20.53	17.03	15.41	14.5	13.93	13.57	13.37	13.25	13.2	13.27	13.67	13.87	14.36	14.98	16.63	19.05	22.58
160	175	0.3899	M.E.P.	159.	132.14	106.41	88.4	75.32	65.42	57.64	51.36	46 16	41.79	34.81	27.26	25.26	21.82	18.96	14.46	11.07	8.42
			S.P.H.	33.71	20.36	16.8	15.16	14.23	13.66	13.28	13.02	12.92	12.83	12.82	13.11	13.26	13.65	14.14	15.45	17.3	19.9
170	185	0.4117	M.E.P.	169.	140.61	113.41	94.36	80.54	70.08	61.84	55.21	49 72	45.09	37.72	29.73	27.61	23.98	20.96	16.2	12.61	9 81
			S.P.H.	33.5	20.13	16.63	15.	14.06	13.46	13.07	12.82	12.65	12.55	12.52	12.7	12 82	13.11	13.51	14.57	16.02	18.03
175	190	0.4222	M.E.P.	174.	144.84	116.92	97.35	83.16	72.4	63.95	57.13	51.49	46.74	39.17	30.96	28.79	25.06	21.96	17.07	13.39	10.51
			S.P.H.	33.36	20.05	16.56	14.92	13.97	13.37	12.97	12.71	12.53	12.43	12.36	12.5	12.61	12.87	13.22	14.11	15.50	17.28
180	195	0 4327	M.E.P.	179.	149.07	120.4	100.32	85.77	74.73	66.05	59.06	53.27	48.4	40.62	39.2	29.97	26.14	22.95	17.94	14.16	11.21
			S.P.H.	33.24	19.95	16.47	14.82	13.86	13.27	12.87	12.58	12.42	12.28	12.21	12.31	12.4	12.63	12.96	13.82	15.02	16.6
190	205	0.4536	M.E.P.	189.	157.54	127.4	106.29	90.98	79.38	70.26	62.9	56.82	51.7	43.53	34.67	32.33	28.3	24.95	19.68	15.71	12.6
			S.P.H.	33.	19.8	16.32	14.67	13.75	13.1	12.68	12.4	12.2	12.06	11.93	11.98	12.2	12.24	12.5	13.21	14.17	15.5
200	215	0.4742	M.E.P.	199.	166.	134.39	112.26	96.2	84.03	74.47	66.75	60.37	55.	46.43	37.14	34.69	30.46	26.95	21.42	17.26	13.99
			S.P.H.	32.75	19.65	16.18	14.52	13.52	12.92	12.47	12.21	12.01	11.85	11.7	11.7	11.86	11.88	12.2	12.68	13.5	14.58
210	225	0.4947	M.E.P.	209.	174.47	141.39	118.22	101.42	88.69	78.68	70.6	63.92	58.3	49.34	39.62	37.05	32.62	28.95	23.16	18.8	15.39
			S.P.H.	32.55	19.5	16.03	14.38	13.42	12.77	12.35	12.05	11.83	11.67	11.48	11.43	11.45	11.58	11.75	12.23	12.92	13.82
285	300	0.6486	M.E.P.	284.	237.96	193.85	162.98	140.56	123.59	110.24	99.47	90.57	83.07	71.12	58.16	54.73	48.83	43.93	36.22	30.41	25.85
			S.P.H.	31.35	18.72	15.33	13.7	12.68	12.03	11.56	11.21	10.93	10.65	10.45	10.22	10.18	10.14	10.15	10.26	10.47	10·78

TABLE D.

STEAM CONSUMPTION AND MEAN EFFECTIVE PRESSURE FOR CONDENSING ENGINES.

Gage Pressure.	Absolute Pressure.	Weight of One Cubic Foot of Steam.		Expansions in all Cylinders. Condensing Computed at 7 Lbs. Absolute Back Pressure.																	
				1	2	3	4	5	6	7	8	9	10	12	15	16	18	20	24	28	32
80	95	0.2198	M.E.P.	88.	73.42	59.45	49.67	42.57	37.2	32.97	29.56	26.74	24.37	20.58	16.48	15.39	13.53	11.97	9.53	7.69	6.25
			S.P.H.	34.35	20.58	16.95	15.22	14.2	13.52	13.10	12.78	12.55	12.4	12.24	12.22	12.27	12.42	12.62	13.2	14.2	15.19
90	105	0.2414	M.E.P.	98.	81.88	66.45	55.64	47.79	41.85	37.18	33.41	30.3	27.67	23.49	18.95	17.75	15.69	13.97	11.27	9.24	7.64
			S.P.H.	33.87	20.27	16.65	14.92	13.9	13.22	12.75	12.42	12.16	11.96	11.77	11.67	11.68	11.75	11.87	12.38	12.82	13.57
100	115	0.2628	M.E.P.	108.	90.35	73.44	61.60	53.01	46.5	41.39	37.26	33.85	30.97	26.39	21.42	20.11	17.85	15.97	13.02	10.79	9.04
			S.P.H.	33.46	19.99	16.4	14.66	13.63	12.95	12.47	12.12	11.85	11.66	11.41	11.24	11.23	11.24	11.31	11.56	11.96	12.49
110	125	0.2845	M.E.P.	118.	98.81	80.44	67.57	58.23	51.16	45.6	41.11	37.4	34.28	29.3	23.9	22.47	20.01	17.97	14.76	12.33	10.43
			S.P.H.	33.15	19.8	16.2	14.47	13.42	12.73	12.25	11.88	11.62	11.41	11.12	10.91	10.88	10.85	10.88	11.02	11.32	11.72
120	135	0.3060	M.E.P.	128.	107.28	87.43	73.53	63.45	55.81	49.8	44.96	40.95	37.58	32.2	26.37	24.83	22.17	19.97	16.50	13.88	11.83
			S.P.H.	32.47	19.62	16.05	14.3	13.27	12.56	12.17	11.7	11.42	11.2	10.89	10.64	10.59	10.55	10.54	10.62	10.82	11.12
125	140	0.3162	M.E.P.	133.	111.51	90.93	67.52	66.06	58.14	51.91	46.88	42.73	39.23	33.65	27.6	26.	23.25	20.96	17.37	14.65	12.53
			S.P.H.	32.68	19.48	15.94	14.2	13.16	12.46	11.96	11.58	11.31	11.08	10.76	10.5	10.45	10.38	10.37	10.45	10.58	10.84
130	145	0.3273	M.E.P.	138.	115.74	94.43	79.5	68.67	60.46	54.01	48.81	44.51	40.88	35.1	28.84	27.18	24.33	21.96	18.24	15.43	13.23
			S.P.H.	32.61	19.45	15.89	14.15	13.11	12.41	11.9	11.52	11.25	11.01	10.68	10.4	10.34	10.28	10.27	10.28	10.41	10.62
140	155	0.3484	M.E.P.	148.	124.21	101.42	85.46	73.89	65.12	58.22	52.66	48.06	44.19	38.01	31.31	29.54	26.5	23.96	19.98	16.97	14.63
			S.P.H.	32.36	19.3	15.76	14.02	12.97	12.26	11.75	11.3	11.08	10.84	10.5	10.2	10.14	10.05	10.02	9.99	10.07	10.22
150	165	0.3695	M.E.P.	158.	132.68	108.42	91.43	79.11	69.77	62.43	56.51	51.61	47.49	40.91	33.78	31.9	28.66	25.96	21.72	18.52	16.02
			S.P.H.	32.16	19.16	15.62	13.88	12.85	12.13	11.63	11.24	10.94	10.7	10.35	10.03	9.97	9.87	9.81	9.75	9.8	9.92
160	175	0.3899	M.E.P.	168.	141.14	115.41	97.4	84.32	74.42	66.64	60.36	55.16	50.79	43.81	36.26	34.26	30.82	27.96	23.46	20.07	17.42
			S.P.H.	31.91	19.07	15.48	13.76	12.72	12.	11.49	11.1	10.79	10.55	10.19	9.87	9.78	9.67	9.59	9.52	9.54	9.62
170	185	0.4117	M.E.P.	178.	149.61	122.41	103.36	89.54	79.08	70.84	64.21	578.2	54.09	46.72	38.73	36.61	32.98	29.96	25.2	21.61	18.81
			S.P.H.	31.81	18.92	15.42	13.7	12.64	11.93	11.42	11.02	10.71	10.47	10.11	9.75	9.67	9.54	9.45	9.36	9.36	9.4
175	190	0.4222	M.E.P.	183.	153.84	129.92	106.35	92.16	81.4	72.75	66.13	60.49	55.74	48.17	39.96	37.79	34.06	30.96	26.07	22.39	19.51
			S.P.H.	31.72	18.86	15.37	13.64	12.59	11.88	11.36	10.97	10.66	10.42	10.04	9.68	9.6	9.47	9.38	9.28	9.26	9.3
180	195	0.4327	M.E.P.	188.	158.07	129.4	109.33	94.77	83.73	75.05	68.06	62.27	57.4	49.62	41.2	38.97	35.14	31.95	26.94	23.16	20.21
			S.P.H.	31.65	18.83	15.32	13.6	12.56	11.84	11.32	10.92	10.61	10.36	9.99	9.63	9.55	9.41	9.31	9.21	9.18	9.2
190	205	0.4536	M.E.P.	198.	166.54	136.4	115.29	99.98	88.38	79.26	71.9	65.82	60.7	52.53	43.67	41.33	37.3	33.95	28.68	24.71	21.6
			S.P.H.	31.5	18.72	15.23	13.52	12.47	11.75	11.23	10.84	10.52	10.27	9.9	9.53	9.44	9.29	9.19	9.07	9.02	9.03
200	215	0.4742	M.E.P.	208.	175.	143.39	121.26	105 2	93.03	83.47	75.75	69.37	64.	55.43	46.14	43.69	39.46	35.95	30.42	26.26	22.99
			S.P.H.	31.35	18.63	15.16	13.44	12.4	11.68	11.16	10.76	10.44	10.18	9.81	9.43	9.34	9.18	9.07	8.94	8.87	8.87
210	225	0.4947	M.E.P.	218.	183.47	150.39	127.22	110.42	97.69	87.68	79.6	72.92	67.3	58.34	48.62	46.05	41.62	37.95	32.16	27.86	24.39
			S.P.H.	31.2	18.55	15.07	13.36	12.32	11.6	11.08	10.68	10.36	10.1	9.72	9.34	9.24	9.08	8.97	8.82	8.74	8.72
285	300	0.6486	M.E.P.	293.	246.96	202.85	191.78	149.56	132.59	119.24	108.47	99.57	92.07	80.12	67.16	63.73	57.83	52.93	45.22	39.41	34.85
			S.P.H.	30.43	18.05	14.65	12.95	11.92	11.2	10.68	10 27	9.95	9.68	9.28	8.9	8.75	8.57	8.42	8.22	8.08	8.00

If the initial pressure is increased above the amounts on which the above tables of *corrections* are based, the cylinder *condensation* will be increased by $\frac{1}{5}$ pound for each 10 pounds of increase in initial pressure. For instance, in non-condensing engines if the pressure is 100 pounds instead of 80, then to the amount in the correction Table A an additional .4 pound must be added. In the case of condensing engines, if the initial pressure is 165 pounds an additional amount of $\frac{165-125}{10}\times.2=.8$ pound must be added to the amount in the correction Table B.

Example.—What is the steam consumption of a non-condensing engine, initial pressure 100 pounds, five expansions. From Table C, 16.42 pounds; condensation 6.70 pounds at 80 pounds pressure, hence at 100 it would be $6.7+\frac{100-80}{10}\times.2$ $=7.1$. Total consumption $=23.52$ pounds.

In Tables C and D the mean effective pressure, M.E.P., is a little greater than would be realized owing to the effects of compression, release, and clearance.

Compare results obtained as above indicated with the results given below. See *Power*, July 14, 1908.

(1) 15 in. by 14 in.; 240 r.p.m.; horizontal, single, flat-valve engine with 100-kw. d.c. generator on the shaft. Average steam pressure 83 pounds; back pressure 4.8 pounds; cut-off 30.7%; water per I.H.P. per hour, observed pounds, 44.7.

(2) 16 in. by 15 in.; 240 r.p.m.; vertical, single-flat valve engine with two 50-kw. d.c. generators on the shaft. Average steam pressure 75 pounds; average back pressure, 1.6 pounds; average cut-off, 46.85 and 29.3%; water per I.H.P. per hour observed pounds, 37.3 and 39.7.

(3) 14 in. by 12 in.; 300 r.p.m.; horizontal, single flat-valve engine with two 40-kw. d.c. generators on the shaft; average steam pressure 91 pounds; average back pressure 6 pounds; average cut-off, 45.3 and 25.1%; water consumed per I.H.P. per hour observed, 37.5 and 37.3 pounds.

(4) 16 in. by 14 in.; 270 r.p.m.; horizontal engine with four flat valves and having a 125-kw. d.c. generator on the shaft; tested at $\frac{1}{2}$, $\frac{3}{4}$, and full load; steam pressure, 114 pounds; back

pressure, 3.5, 5, and 8 pounds; cut-off, 16.5, 27, and 40%; water per I.H.P. per hour observed, 45.7, 43.4, and 42.7 pounds.

(5) 12 in. and 19 in. by 14 in.; 230 r.p.m.; vertical, cross-compound condensing piston valve engine with a 100-kw. d.c. generator on the shaft; steam pressure, 114 pounds; average cut-off, H.P. cylinder 33 and 21%; average cut-off, H.P. cylinder, 38 and 25%; water per hour observed, pounds, 25 and 20, at .8 and .7 full load.

(6) 18 in. by 18 in.; 220 r.p.m.; horizontal piston valve engine with a 100-k.w. d.c. generator on the shaft; approximate loads $1\frac{1}{4}$, $\frac{3}{4}$, $\frac{1}{2}$; average steam pressure, 114 pounds; I.H.P. 273, 170, 122; water per I.H.P. per hour observed, pounds, 29.7, 34.8, 39.89.

(7) 15 in. by 16 in.; 250 r.p.m.; horizontal single piston valve engine with a 100-kw. d.c. generator on the shaft; loads, full, $\frac{3}{4}$, $\frac{1}{2}$, and $\frac{1}{4}$; steam pressure 87 pounds; I.H.P. 137, 102, 69, 36; water per I.H.P. per hour observed, pounds, 34.1, 37, 42.3, 56.3.

(8) 12 in. by 18 in.; 190 r.p.m.; horizontal engine with two flat inlet valves and two Corliss valves, and having a 75-kw. d.c. generator on the shaft. Loads, $1\frac{1}{2}$, 1, and $\frac{1}{2}$; average steam pressure 90 pounds; I.H.P., 111, 74, 43; water I.H.P. per hour observed, pounds, 34, 36.8, and 44 pounds.

While it would be unfair to draw general conclusions from isolated tests such as the above it is nevertheless proper to call attention to the great loss in economy due to improper seating of valves and of pistons. Poorly made four-valve high-speed engines will not compare in economy with well made single-valve engines. The latter should have valves for which the wearing process should be a tightening process. Balanced valves in which this process does not take place showed up badly in the above test. The economical loads are the heavy loads. D. K. Clark in the early fifties showed that the economical load for locomotives was that due to a cut-off at one-third stroke.

Ex. 86. Assume data from Engine Tests by Barrus, and work out the analysis.

Ex. 87. Assume card and other required data, and work out the analysis.

Ex. 88. Corliss engine, area piston 8 square feet, stroke 4 feet, clearance 2 inches, cut-off 1/6 stroke, initial pressure 100 pounds gage, exhaust opens and closes at end of the stroke, expansion according to the law $PV=C$, revs. 100 per min., 20% of dry steam that was admitted is condensed, quality of steam admitted = 98%. Give Hirn's analysis.

CHAPTER VIII.

ENTROPY.

Definition.—Every term on either side of an equation must be of the same degree. An area cannot equal a volume, and a foot-pound cannot equal any number of feet, pounds, or degrees of temperature. When the chemical energy of gunpowder is converted, through an explosion, into work, heat, light, and sound, all of these must be compound and of like degree. As work is a compound of two factors, heat must also be a compound of two factors.

An area is a product of two dimensions, and, just as we have heretofore represented work by areas, we shall now show that heat may be represented in a similar manner. In so doing we shall be able to illustrate easily certain facts that are difficult to understand. Let it be clearly understood from the beginning that as in the construction of the work diagram or PV diagram no thought was given to the variation of heat quantities, so in the construction of the heat diagram, or ϕT diagram as it is often called, we must lay off heat quantities and ignore variation of pressures and volumes.

As work in foot-pounds is equal to Wh or $PV = (pA)L'$, similarly heat in thermal units will be found to equal ϕT, where ϕ, or entropy, represents one factor of heat, and T, or absolute temperature, represents the other. As the work diagram is a rectangle if P is constant, similarly the heat diagram is a rectangle if T is a constant. The word entropy is derived from two Greek words *en* and *tropē*, meaning a turning in or transformation, referring to the heat per degree which is transferred to another body or transformed into another form.

As we must resort to calculus in PV calculations when the pressures vary according to some law, so we must resort to the same instrument if the temperatures vary in the ϕT diagram. As work is made up of the sum of the infinitesimal rectangles,

$abcd$, $= pdV$, Fig. 113, so the heat added is made up of the sum of the infinitesimal heat changes $Td\phi$, Fig. 115. During these

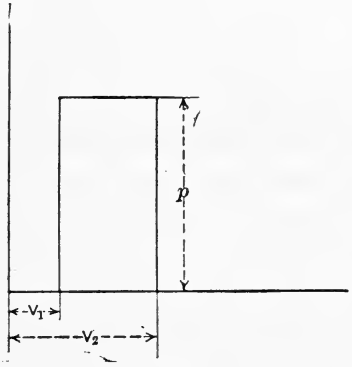

FIG. 112.

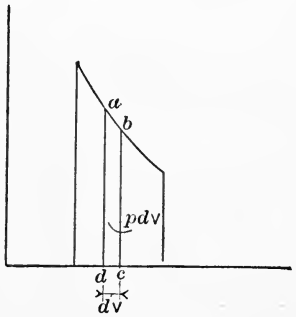

FIG. 113.

changes T is kept constant as P was kept constant in the work diagram. Hence (Fig. 115) we have $dQ = Td\phi$ or $d\phi = \frac{dQ}{T}$. We can easily integrate this expression, when we can express Q in terms of T. It is essential to remember that T is absolute temperature.

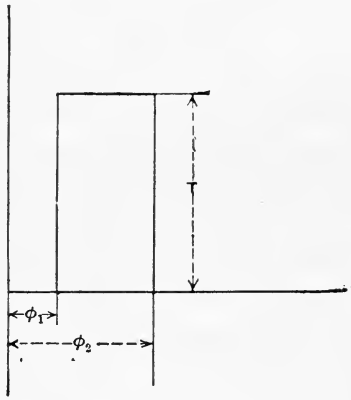

FIG. 114.

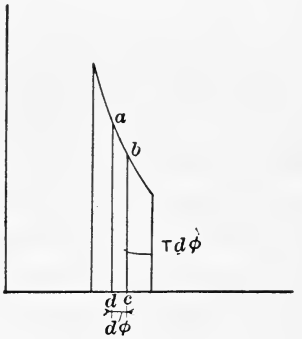

FIG. 115.

The proper interpretation of many facts already given will show that absolute temperature is one of the factors of heat. The heat in a body increases or decreases as we increase or decrease its temperature. If a perfect gas is expanded adiabatically to absolute zero of temperature, it has lost all its heat. In other words, the total heat of a perfect gas is a function of its absolute temperature.

If we agree that heat is made up of two factors and that absolute temperature is one of them, we may call the other factor anything we please. It is not possible at present to give an absolute concrete meaning to entropy. It is said to be analogous to pressure in a PV formula, or analogous to a variable thermal mass in the formula for energy, $\frac{WV^2}{2g}$. For the present the student will find the mathematical definition sufficient. In addition he should keep in mind that change in entropy depends upon a change of heat as *heat.* When heat is transformed into available work there is no change in the entropy, since there has been no loss of heat as heat. The student must remember that exact processes are theoretic ones. In adiabatic expansion there must be no friction, conduction, nor radiation. In other words, the process is reversible. Evidently these assumptions are not absolutely obtained, then, in any practical case.

In representing heat by an area, absolute temperatures are represented by ordinates, and variable entropy by variable abscissas. Further, whilst temperature must be laid off from absolute zero of temperature, entropy is never so laid off. We are only interested in the increase or decrease of the entropy of a substance, and not in the total amount of entropy that it may possess above the absolute zero of entropy. In other words, by the formula $d\phi = \frac{dQ}{T}$ we mean that the addition or subtraction of the quantity of heat dQ at $T°$ produces a change of entropy $d\phi$. The starting-point for measuring entropy is taken at 32° F., as we are not interested in the entropy of ice above some lower temperature.

In drawing a PV diagram, we assume one scale for pressures and a different one for volumes. Similarly in entropy diagrams, we may assume any convenient quantity, as $\frac{1}{2}''$ or $\frac{1}{4}''$, to represent 100 degrees of temperature, and $1''$ or $2''$ to represent a unit of entropy. Assuming 200 degrees $= 1''$ and unity of entropy $= 1''$, then 1 sq. inch area $= 200$ B.T.U.

If dQ thermal units raise the temperature of any liquid dT degrees, we know that $dQ = cdT$, where c is the specific heat of the liquid. For water we may assume $c = 1.0$ for all temperatures. Hence, for water, $dQ = 1.0dT$, and therefore the equation $d\phi = \frac{dQ}{T}$

becomes $d\phi = \frac{1.0 dT}{T}$, or $\frac{dT}{T}$. The student should remember that the numerator dT now represents an infinitesimal quantity of heat and not an infinitesimal difference of temperature.

Taking our origin for entropy at that possessed by water at 32° F., we have for the increase of entropy, when water is heated from $T_0° = 32° + 461$ to $T_1°$, any other temperature in degrees Fahrenheit absolute,

$$\int_0^{\phi} d\phi = \int_{T_0}^{T_1} \frac{dT}{T} = \log_\epsilon T_1 - \log_\epsilon T_0 = \log_\epsilon \frac{T_1}{T_0}.$$

Construction of the Water-line.—To illustrate the use of the above formula, let us draw the line that shows the variation of absolute temperature and entropy when one pound of water is heated from 32° F. to 350° F.

As this line will be slightly curved, let us find the abscissa and ordinate for one pound of water heated to

$$t_0 = 32° \text{ F.}; \; t_1 = 100° \text{ F.}; \; t_2 = 212° \text{ F.}; \; t_3 = 350° \text{ F.}$$

The ordinates are

$$T_0 = 493°; \; T_1 = 561°; \; T_2 = 673°; \; T_3 = 811°.$$

The abscissas are

$$\phi_0 = \log_\epsilon \frac{493}{493} = 0; \; \phi_1 = \log_\epsilon \frac{561}{493} = .1296; \; \phi_2 = \log_\epsilon \frac{673}{493} = .313; \text{ and}$$

$$\phi_3 = \log_\epsilon \frac{811}{493} = .5042.$$

Having the abscissa and ordinate for each of the four points, they may be plotted as in Fig. 116, where t_0, t_1, t_2, t_3 represent the points.

The heat required to raise the water from 32° F. to 350° F. is the area $e_0 t_0 t_3 e_3$. To show this approximately multiply the mean ordinate by $e_0 e_3$, or $\frac{493 + 561 + 673 + 811}{4} \times .5042 = 319$ B.T.U., or $350 - 32 = 318$ B.T.U. These results would be equal if we had laid off the figure accurately and used a planimeter.

As the curvature of the line $t_0 t_3$ is so slight, the entropy may be obtained directly by dividing the known area by the mean

ordinate. For example, the area of $e_0t_0t_1e_1 = q_1 - q_0 = 68 - 0 = 68$ B.T.U. Dividing this by the mean temperature we have

$$\frac{68}{\frac{493+561}{2}} = .129$$ as the entropy or abscissa e_0e_1.

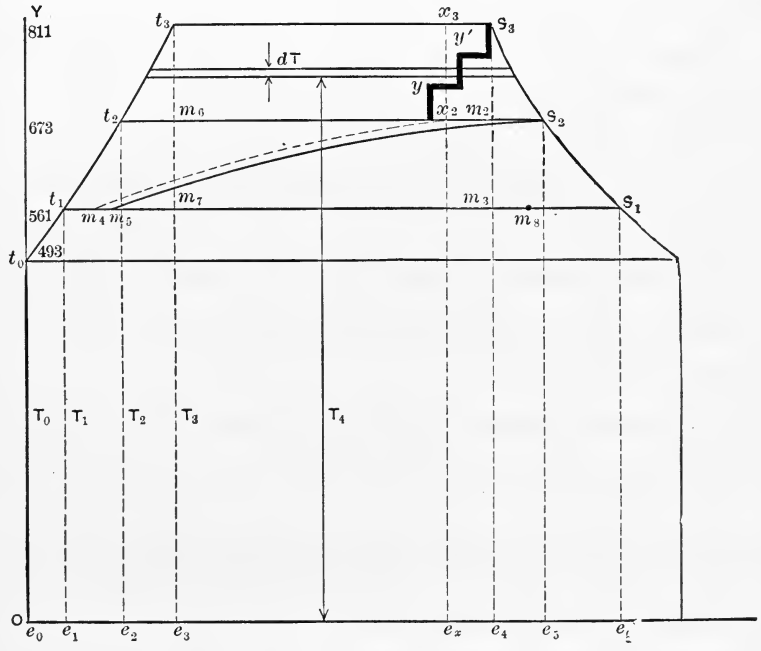

FIG. 116.

The reason for choosing an arbitrary starting-point for entropy may now be shown. In the expression $\phi = \log_e \frac{T_1}{T}$ let $T = 0°$ absolute, $\therefore \phi = \infty$. This shows that entropy measured from an absolute zero of entropy is infinite, so that it is absolutely necessary to start at some finite point.

In the construction of the water-line it must be distinctly understood that the pressure on the water increased with the addition of heat in such manner that there was no steam formed.

Ex. 89. On a scale of $1'' = 200°$ Fahr. abs. and $3'' =$ unity of entropy, lay off the water-line for 32°, 100°, 150°, 200°, 250°, 300° from the entropy table; measure the area with a planimeter. Table VII.

Steam-line at Constant Pressure.—Having reached any desired pressure and the corresponding boiling-point, let any further addition of heat go to the conversion of some of the water into steam. The volume increases in proportion to the steam formed and the temperature will remain constant.

The heat added is the sum of the internal and external latent heat. Ordinarily this sum is called simply the "latent heat." As the temperature remains constant, it is evident that the ordinate in the diagram will be constant, and that the entropy will vary directly with the amount of heat added or *the amount of water converted into steam.*

If L_3 = latent heat of one pound of steam at $T_3°$ Fahr. absolute, the increase of entropy over that of water at the boiling-point $T_3°$ is $\frac{L_3}{T_3}$. The total entropy above water at 32° F. is $\log_e \frac{T_3}{T_0} + \frac{L_3}{T_3}$. If the water was initially at some temperature T_1 higher than T_0, the increase of entropy above T_1 will be less by $\log_e \frac{T_1}{T_0}$, or the entropy required to raise one pound of water at a temperature T_1 to T_3 and convert it into steam at that temperature is $\log_e \left(\frac{T_3}{T_1}\right) + \frac{L_3}{T_3}$ since $\log_e \frac{T_3}{T_0} - \log_e \frac{T_1}{T_0} = \log_e \frac{T_3}{T_1}$.

An approximate value for $\log_e \left(\frac{T_3}{T_0}\right) + \frac{L_3}{T_3}$ is $\frac{2(q_3 - q_0)}{T_3 + T_0} + \frac{L_3}{T_3}$.

If we consider the diagram (Fig. 116) to be made by a point travelling along the water-line, its vertical movement being due to increase of temperature and its horizontal motion being proportional to increase of entropy, we know that after water reaches the boiling-point there is no further increase of temperature. On further addition of heat the point must then change direction abruptly and travel parallel to the horizontal axis. The distance travelled along this line will be directly proportional to the amount of water evaporated. For instance, if $t_2 s_2$ is the entropy added to one pound of water at the boiling-point to form one pound weight of steam at that same temperature, then $t_2 m_2$ is the entropy of $\frac{t_2 m_2}{t_2 s_2}$ pounds of steam. And, of course, $\frac{m_2 s_2}{t_2 s_2}$ represents the fraction

of the pound of water that has NOT been converted into steam, or, in other words, is water.

Expansion Curves.—Draw the steam-lines due to the formation of steam by the addition of heat to water at the following boiling-points: $t_3 = 350°$ F.; $t_2 = 212°$ F.; and $t_1 = 100°$ F.

We may substitute in the formula

$$\text{Latent heat} = 1091.7 + .305(t_3 - 32) - (t_3 - 32),$$

or from the tables obtain

Latent heat at 350° F. = 868 B.T.U., $\therefore e_3e_4 = \dfrac{868}{350+461} = 1.07$;

212° F. = 966 " $e_2e_5 = \dfrac{966}{673} = 1.44$;

100° F. = 1044 " $e_1e_6 = \dfrac{1044}{561} = 1.86$.

Evidently the area of the rectangle $e_3t_3s_3e_4 = L_3 =$ 868 B.T.U.
$e_2t_2s_2e_5 = L_2 =$ 966 "
$e_1t_1s_1e_6 = L_1 =$ 1044 "

Ex. 90. From the values in a table of entropy, lay off the entropies for 1 pound of steam at the temperatures and on the same scales as in Ex. 89.

The lines t_3s_3, t_2s_2, t_1s_1 are lines of *constant temperature* or *isothermal lines*. If the points s_3, s_2, s_1, are joined, the curve so obtained is called the *saturation* curve. This is a short way of expressing the fact that as $t_3t_2t_1$ limits the entropies of one pound of water at varying temperatures, so $s_3s_2s_1$ limits the entropies of one pound of dry saturated steam at various temperatures in a similar way.

In discussing the expansion of steam it is easy to propose theoretical conditions that could not be carried out in practice. The information gained is of great value, however, as practical conditions may lie between supposed ideal conditions.

Theoretically we may suppose the steam to expand—

1. Adiabatically.

2. To expand receiving heat in just sufficient quantities as to prevent the formation of any water by the loss of heat in any way. The steam is kept dry, and therefore contains the

tabular number of B.T.U. for one pound of steam at each temperature.

3. To expand and meanwhile receive heat so that the steam becomes drier or perhaps superheated.

CASE 1.—What course will the tracing-point that described the water-line $t_1t_2t_3$ and the line t_3s_3 take (Fig. 116), if the steam is supposed to expand adiabatically? Keep in mind that this diagram is not concerned in variation of volume and pressure, but solely in the reception and rejection of heat as heat. The tracing-point must radically change its direction and follow the line s_3e_4. That this is true is indicated by the equation $d\phi = \frac{dQ}{T}$, for if the amount of heat added, dQ, is zero, the change of entropy $d\phi$ is zero; therefore a line of adiabatic change is one that is parallel to the axis of temperature, OY.

As the tracing-point follows the line s_3e_4 it cuts the isothermal line t_2s_2 in some point m_2. The significance of this is important. The position of m_2, in accordance with a previous explanation, shows that if a pound of perfectly dry steam at a temperature of T_3 expands adiabatically to T_2, only $\frac{t_2m_2}{t_2s_2}$ will remain dry steam, as $\frac{m_2s_2}{t_2s_2}$ will be condensed to furnish heat to do work. With greater expansion there is greater condensation, as is shown by the increased value of $\frac{m_3s_1}{t_1s_1}$.

Ex. 91. At cut-off, the volume is 4 cubic feet, pressure is 100 pounds per square inch absolute, and the card shows 80% of the steam admitted. If it were possible to expand the steam adiabatically to 15 pounds per square inch, how much water would be present?

If the steam is condensed at constant *pressure*, the temperature will remain constant. This is not so if the condensation takes place at constant *volume*, for then both pressure and temperature change. If, then, after expanding adiabatically to temperature t_2 the steam is condensed at constant pressure, our tracing-point will follow the isothermal line m_2t_2, and will reach t_2 if all the steam is condensed at t_2. If the water at t_2 is cooled, the tracing-point will follow the water-line t_2t_1 to the temperature t_1 of cooling.

Work Done per Pound of Steam during Admission and Adiabatic Expansion—We shall discuss the case of wet steam, since that of dry steam is easily found by making the quality of the steam mixture 100% instead of a less quantity Fig. 116). If the whole pound of water at t_3 is not converted into dry steam, lay off x_3 so that $\frac{x_3 t_3}{t_3 s_3}$ equals p_3, the quality of the steam. Then the position of x_3 indicates the entropy of the mixture. If this mixture expands adiabatically to any lower temperature t_2, the intersection of the vertical with $t_2 s_2$ or x_2 marks the quality of the steam at that time. Calling this quality of the steam p_2, we see that

$$p_2 = \frac{t_2 x_2}{t_2 s_2} = \frac{e_2 e_3 + t_3 x_3}{t_2 s_2} = \frac{\log_\epsilon \frac{T_3}{T_2} + \frac{p_3 L_3}{T_3}}{\frac{L_2}{T_2}},$$

since $L_3 =$ area $e_3 t_3 s_3 e_4$ and $L_2 =$ area $e_2 t_2 s_2 e_5$.

Example.—If one pound of water at 100° F. is converted into steam, quality 95%, at 350° F., does work during admission and adiabatic expansion to 212° F., what will be its quality at the end of expansion? If the pressure during exhaust is constant and equal to the final pressure of expansion, find the theoretical heat expended, heat rejected, heat utilized, and the efficiency.

$$\text{Log}_\epsilon \frac{811}{673} = .18, \quad \frac{.95 \times 867.3}{811} = 1.016, \quad \frac{966}{673} = 1.435,$$

$$\therefore \; p_2 = \frac{.18 + 1.016}{1.435} = 83.3\%.$$

Heat expended from $t_1 = 100 =$ area $e_1 t_1 t_3 x_3 e_x$

$$= 350 - 100 + .95 \times 867.3 = 1074 \text{ B.T.U.}$$

Heat rejected must be measured down to feed-water temperature $= e_1 t_1 t_2 x_2 e_x = 212 - 100 + p_2 L_2$

$$= 212 - 100 + .833 \times 966 = 916.7 \text{ B.T.U.}$$

$$\text{Efficiency} = \frac{\text{Heat utilized}}{\text{Heat expended}} = \frac{1074 - 916.7}{1074} = 15\%.$$

This of course neglects initial condensation, friction, wire-drawing, etc.

In Fig. 117 we have a theoretical indicator-card representing the conditions of the last example. The line *ab* corresponds to t_3x_3, and at *b* there is present one pound of wet steam, quality $\frac{x_3t_3}{s_3t_3}$. This steam expands adiabatically to *c*, the adiabatic *bc* corresponding to x_3x_2. The exhaust opens and the steam is forced out at

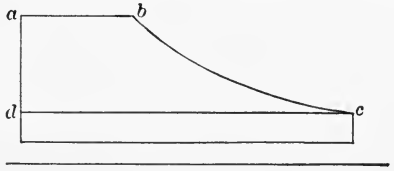

FIG. 117.

constant back pressure equal to the final pressure of expansion, the line *cd* corresponding to x_2t_2.

Velocity of Steam Passing Through a Nozzle.—The above formulas apply to steam flowing through nozzles as used in steam-turbines. The sum of all the different forms of energy on one side of a section must equal the sum of all the energies on the other side of that section. In the case under consideration there are

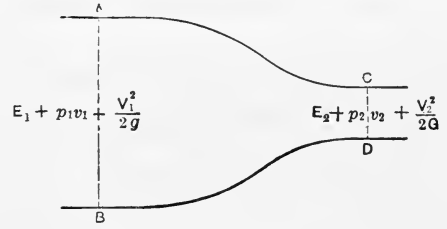

FIG. 118.

three different forms of energy, viz., heat or intrinsic energy, *E*, external work, $\frac{pv}{w}$, and kinetic energy or energy of motion; hence, Fig. 118, at any two sections, *AB* and *CD*,

$$w\left(E_1+p_1v_1+\frac{V_1{}^2}{2g}\right)=w\left(E_2+p_2v_2+\frac{V_2{}^2}{2g}\right).$$

The velocity of approach, V_1, in a large vessel is inappreciable and may be neglected. The equation becomes, per pound per second,

$$\frac{V_2{}^2}{2g}=(E_1+p_1v_1)-(E_2+p_2v_2).$$

Inspection shows that the right-hand member of this equation is the difference of the total heats of one pound of steam. Calling H_1 and H_2 the total heats of one pound of the steam, differing according as the steam is wet, dry, or superheated, we have, omitting the subscript,

$$\frac{V^2}{2g} = (H_1 - H_2)\ 778 \text{ foot-pounds.}$$

From theoretical conditions and experiment, it is known that the weight of steam flowing through an orifice increases as the back pressure decreases to a limit which is reached when the back pressure is .57 of the forward pressure (see page 445).

Initial Pressure, Pounds Absolute per Square Inch P_1.	Orifice Pressure $P_2 = .57\ P_1$.	Weight of Fow, Pounds per Second.			Calculated Velocity, Feet per Second, at smallest Cross-section of Orifice.
		Observed.	Calculated.		
			By Equation Given	By Napier's Formula.	
132.3	75.2	.063	.0629	.0671	1470
117.6	67.0	.057	.0572	.0596	1495
102.9	58.7	.050	.0500	.0522	1490

* Table from Thomas's Steam-turbines (Wiley).

If dry saturated steam at 132.3 pounds absolute flows through an orifice whose cross-sectional area is .0355 square inch, against a back pressure of 75.2 pounds absolute, what will be the velocity of discharge per second, volume and weight discharged per second?

Draw the entropy diagram, Fig. 119. Then the area $T_1T_2s_2m_1$ represents $H_2 - H_1$ in the formula $\frac{V^2}{2g} = 778(H_2 - H_1)$.

We may obtain that area by either exact or approximate methods. If T_1T_2 is assumed to be a straight line, the area of the trapezoid $T_1T_2s_2m_1$ is $= (T_2 - T_1)B$, where

$$B = \frac{T_2s_2 + T_1m_1}{2} = \frac{2e_2e_3 + e_1e_2}{2} = \frac{\frac{2L_2}{T_2} + \frac{2(q_2 - q_1)}{T_1 + T_2}}{2} = \frac{L_2}{T_2} + \frac{(q_2 - q_1)}{T_1 + T_2}$$

(If the initial steam were wet, the area $T_2x_2m_3T_1$ would be the area.)

$$\therefore\ H_2-H_1=(809-768)\left\{\frac{868}{809}+\frac{319.5-277}{809+768}\right\}=45.1\text{ B.T.U.}$$

$$\therefore\ V^2=64.32\times778\times45.1.$$

$$\therefore\ V=1500\text{ feet per second.}$$

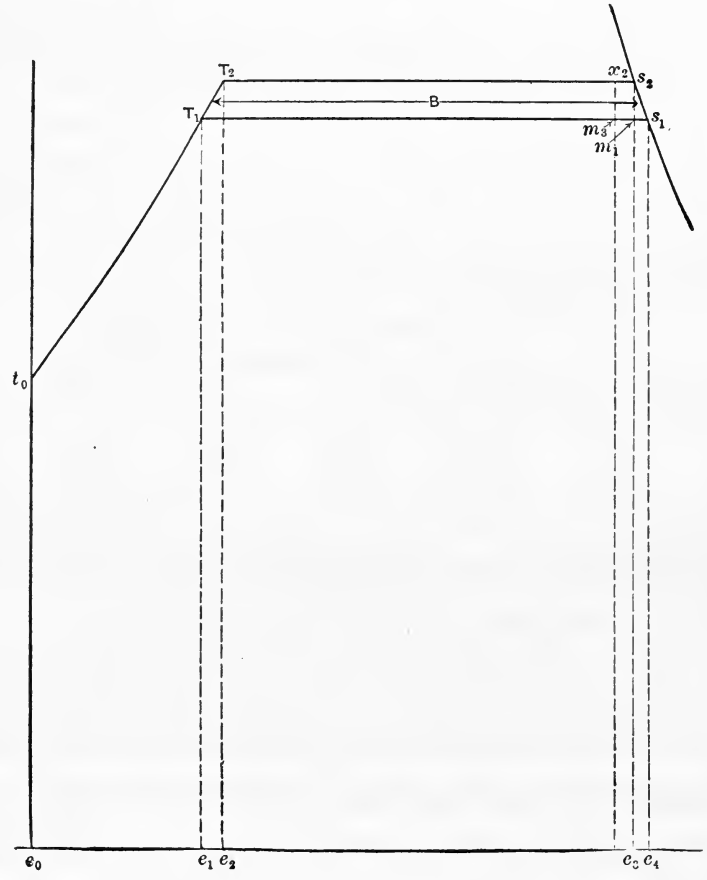

FIG. 119.

The more exact method would give 1470 feet per second. If the steam expands adiabatically, its quality is

$$\frac{T_1m_1}{T_1s_1}\quad\text{or}\quad\frac{e_1e_3}{e_1e_4}=\frac{1.5731-.4465}{1.6155-.4465}=96.4\%.$$

At 75.2 pounds the volume per pound weight of dry steam is 5.68 cubic feet. The volume per pound of wet steam is $96.4 \times 5.68 = 5.47$ cubic feet.

The volume discharged = area orifice × velocity.

$$\frac{.0355 \times 1470}{144} = .362 \text{ cu. ft.}$$

$$\text{The weight discharged} = \frac{.362}{5.47} = .0637 \text{ pound.}$$

Ex. 92. If steam of an initial absolute pressure of 117.6 pounds flows through an orifice whose cross-sectional area is .0355 square inch, against a back pressure of 67 pounds absolute, find the velocity of discharge and volume and weight of steam discharged per second.

Condensation or Expansion at Constant Volume.—Fig. 120 illustrates a series of events similar to those given in the example on

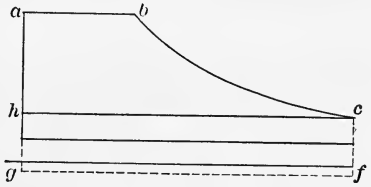

FIG. 120.

page 214 and illustrated in Fig. 117, up to the point of exhaust-opening, *c*. The line *cf* is made while the piston is theoretically stationary. Therefore the volume of the cylinder is not being diminished by the movement of the piston, and the steam is said to be condensing or expanding at constant *volume*. It is evident that the volume of the steam in the cylinder at *f* is precisely the volume that was present at *c*, the weight, of course, being different. We must therefore distinguish between the lines *cf* and *fg* in drawing our entropy diagram. The latter indicates condensation at constant *pressure* and, since that occurs at constant temperature, the corresponding entropy line will be parallel to the entropy axis.

When our tracing-point described the line from t_3 to s_3 (Fig. 116), its position at any moment indicated the weight of steam formed and, therefore, its volume, since we can take from tables the volume of one pound of steam at any temperature and, by

multiplication, obtain the volume of any fraction of a pound. Or, reversing the conditions, if we have the volume of any unknown weight of steam at any known temperature or pressure, by dividing this volume by the volume of one pound of steam at that temperature we obtain a fraction that determines the weight of the steam, and also the proportional part of the entropy of one pound of steam, measuring from the water-line.

To illustrate a method of drawing the curve of constant volume, let us draw the line corresponding to *cf* (in Fig. 120) in the entropy diagram (Fig. 116). We know that x_2 indicates the conditions that exist when one pound of steam, quality 95%, temperature 350° F., has been expanded adiabatically to 212° F. We have found that its quality $\frac{t_2x_2}{t_2s_2}$ is 83.3%. From the tables we find that one pound of steam at 212° F. occupies 26.64 cu. ft. Hence t_2x_2 marks the entropy of $.833 \times 26.64 = 22.19$ cu. ft., or approximately 22 cu. ft. Taking from the tables the temperatures corresponding to volumes which are multiples of 22 cu. ft. per pound of steam, we obtain the following series:

Volume in Cubic Feet.	Degrees. Fahr.	Abs.	Relative Entropy of 22 Cu. Ft.
44.....	186	647	1/2
66.....	167	628	1/3
88.....	154	615	1/4
111.....	144	605	1/5
132.....	137	598	1/6
354.....	100	561	1/16

Hence the entropy of 22 cu. ft. is easily laid off at 1/2 the entropy of one pound of steam at 186° F., 1/3 of that at 167° F., etc., thus obtaining the curve x_2m_4. The back-pressure line *jg* of the indicator-card is given by m_4t_1 of the entropy diagram.

Second Method of Drawing the Constant-volume Curve.—Let t_3s_3 and t_2s_2, Fig. 121, represent two of any number of entropy-lines of steam at constant pressure.

Let *OT* and *OE* be the absolute temperature and entropy axes. Prolong *TO* and lay off on the prolongation *OV* a scale of volumes. The scale must be so chosen that *OV* is at least equal to the volume of one pound weight of steam at the lowest pressure. Since the

diagram deals with one weight of steam only, it is convenient to take the volumes from the tables for one pound, since it is easy to change the scale to give the volumes for any other weight. In the quadrant *TOE*, ordinates represent absolute temperature and abscissas represent entropy; in the quadrant *VOE*, the abscissas represent entropy as before, but the ordinates represent volume.

The line $t_3 s_3$ gives the increase of entropy due to the formation of one pound of steam. At t_3 the volume of the steam is zero, and

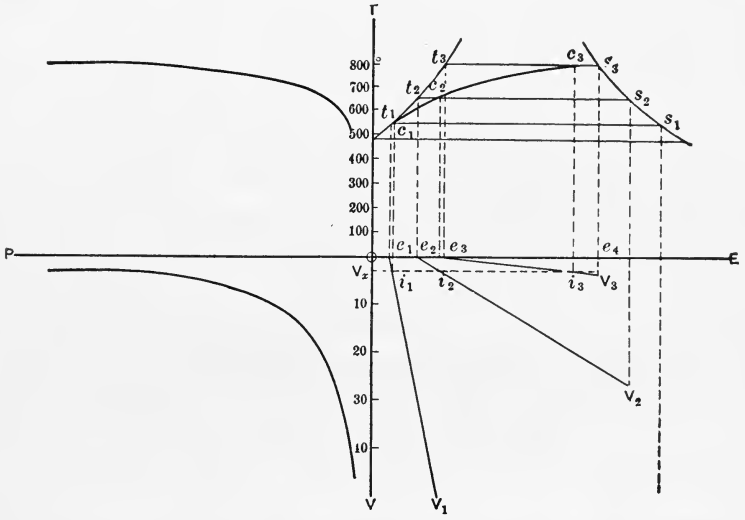

FIG. 121.

the entropy is found by dropping the perpendicular $t_3 e_3$. Similarly, dropping a perpendicular $s_3 e_4$ from s_3 and laying off on the prolongation $e_4 V_3$ equal to the volume of one pound weight of steam at temperature t_3 (in accordance with the scale laid off on OV), we obtain the point V_3. Draw $e_3 V_3$. This is a straight line, as the entropy measured from the water-line is directly proportional to the volume of steam formed. Suppose $e_4 V_3 = 3.324$ cubic feet. If we wished to find the entropy corresponding to any other volume, as three cubic feet, find that number on OV; draw a parallel to OE. At the intersection, i_3, erect a perpendicular to OE. The intersection of this perpendicular with $t_3 s_3$ at c_3 gives the required entropy $t_3 c_3$. In a similar manner draw $e_2 V_2$, $e_1 V_1$,

and find c_2 and c_1. Draw the curve $c_1c_2c_3$. The line so found will represent the entropy at constant volume of 3 cubic feet of steam.

We may now modify the data of the example on page 181.

Example.—One pound of water at 100° F. is converted into steam, temperature 350° F., quality 95%, under constant pressure, and is then expanded adiabatically to 212° F. The exhaust-valve then opens and the pressure drops to that corresponding to a temperature of 100° F.; at this pressure the remaining steam is rejected to the condenser. Find the theoretical heat expended, heat rejected, heat utilized, and the efficiency. See Fig. 116.

The heat expended will be the same as in the preceding example.

The heat rejected will be that of the preceding example less the heat equivalent to the area $t_2x_2m_4t_1$. By means of a planimeter this can be obtained in square inches and the corresponding B.T.U. obtained by multiplying by the heat scale.

The value of the area $t_2x_2m_4t_1$ may be obtained from the indicator-card, Fig. 120, as it is evidently equal to the area *cfgh*.

$cf = 14.69 - .94 = 13.75$. Vol. of cyl. $= 22.19$ cu. ft.

$$cfgh = \frac{13.75 \times 144 \times 22.19}{778} = 56.4 \text{ B.T.U.}$$

Heat rejected $= 916.7 - 56.4 =$ 860.3 B.T.U.

Heat expended $=$ 1074 "

$$\text{Efficiency} = \frac{\text{heat utilized}}{\text{heat expended}} = \frac{1074 - 860.3}{1074} = 20\%, \text{ approx.}$$

Case 2 (Fig. 116).—If one pound of water at t_1 is heated to t_3 and converted into dry steam at t_3, the heat added will be $e_1t_1t_3s_3e_4$. Similarly if water at t_1 is heated to t_2 and evaporated into dry steam at t_2, the heat added will be $e_1t_1t_2s_2e_5$, and similarly with other points. The curve $s_3s_2s_1$ expresses the relation between the temperature and entropy of one pound of dry steam expanding and meanwhile receiving heat in sufficient quantity as to prevent liquefaction entirely. The heat taken from the jacket to do this is $e_4s_3s_2e_5$ between temperatures t_3 and t_2. In adiabatic expansion the weight of steam was constantly changing on account of the condensation of part of the steam. This curve, on the other hand, is called the curve of *constant steam weight* for obvious reasons.

The total heat added is the area $e_1t_1t_3s_3s_2e_5$. This area may be integrated by a planimeter or it may be divided up into the areas $e_1t_1t_2e_2$, $e_2t_2s_2e_5$, and $t_2t_3s_3s_2$. The last area may be obtained as follows: The length of any elementary strip at temperature T (absolute) is $\frac{L}{T}$, and, if the width of the strip is dT, its area is $\frac{L}{T}dT$. This may be integrated if we express L in terms of the absolute temperature T. But

$$L = 1091.7 + .305\,(t_s° - 32°) - (t_s° - 32°)$$
$$= 1091.7 - .7(t_s° - 32°) = 1114 - .7\,t_s°$$
$$= 1114 - .7\,(T - 461) = 1437 - .7\,T.$$

$$\therefore \text{ area } t_2t_3s_3s_2 = \int_{T_2}^{T_3}\left(\frac{1437 - .7\,T}{T}\right)dT = \int_{T_2}^{T_3}\frac{1437\,dT}{T} - \int_{T_2}^{T_3}.7dT$$
$$= 1437\,\log_e\frac{T_3}{T_2} - .7\,(T_3 - T_2).$$

This equals the net work done if the back pressure is constant and is equal to the final pressure of expansion. If the back pressure is less, the increase can be obtained from the indicator-card as in the preceding case.

Case 3.—The law connecting the pressure and volume in Case 1 is $PV^{\frac{10}{9}} = C_1$, in Case 2 it is $PV^{\frac{17}{16}} = C_2$. Owing to the large amount of initial condensation in steam-engines, the steam at exhaust-opening is only superheated in exceptional engines, with high superheat at cut-off. In the case of steam-turbines the exhaust, in certain cases, has been found to be superheated. This is undesirable and is a source of loss. In such engines the energy of the steam is converted into kinetic energy by allowing the steam to expand. The curved buckets of the turbine are designed to reverse, to a greater or less extent, the motion of a mass (of steam) moving at very high velocity. The work done on moving blades by the steam is at the expense of its heat energy, and some steam should condense. It is not desirable that any of this steam should re-evaporate. It does so, however, and for the following reason. Whenever two masses of considerable density move past one another, friction is almost inevitable. With superheated steam in a turbine the friction is considerable, and it is

greater with wet steam, as a very slight film of water increases the surface friction greatly. This friction heats the buckets, and this heat in turn re-evaporates the condensed steam or, at low temperatures, if the steam be dry, tends to superheat it. The low-pressure steam formed in this way does some work on the following vanes before it goes to the condenser.

The conversion of frictional resistance into heat may occur in another way, which forms the basis on which the theory of the Peabody calorimeter rests. Steam flowing through a *simple orifice* in a diaphragm forms eddies. The high kinetic energy of the steam in the orifice is converted back into heat in the chamber of the calorimeter. As no external work is done, the heat in the steam at the final temperature contains as much heat as it did at the initial temperature. This curve of expansion may be called the *Constant-heat Curve.* If the steam at the initial temperature was nearly dry, at the final temperature the steam may contain more heat than is required by saturated steam and the excess is used in superheating the steam.

Constant Heat Curves are hyperbolas since $\phi T = C$. The con-

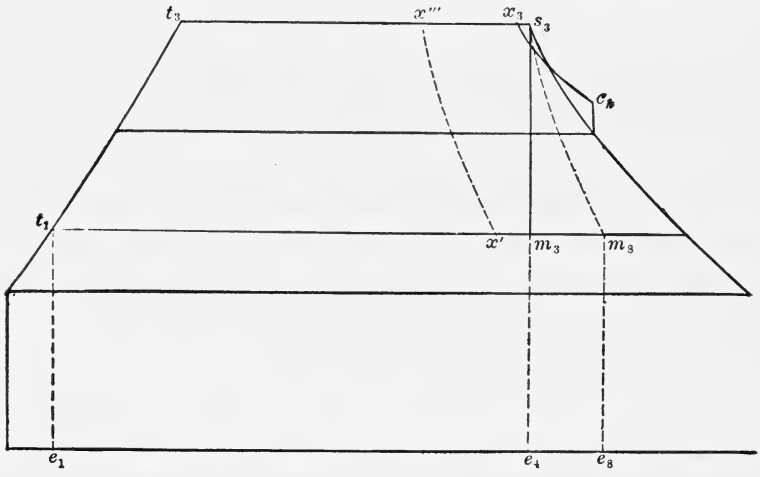

FIG. 122.

stant heat curve $x_3 c_h$, Fig. 122, has the following data: Steam at 350° F., quality 97%, expanding in a Peabody calorimeter to 14.7 pounds; the superheat will be 35° F., approximately. The point

where the curve crosses the saturated steam line indicates the temperature at which one pound of dry saturated steam contains the same number of B.T.U. as an equal weight of wet steam, quality 97%, at 350° F.

In the case of the constant-heat curves a definite law is followed ,and intermediate points may be found and plotted. In the case of steam expanding in an engine-cylinder or in a turbine, it is far from easy to find the values of the variable quality of the steam. Let s_3m_8, Fig. 122, be the curve of expansion followed by steam initially dry. The increase in the external work done, if the final pressure of expansion is equal to the back pressure, is $s_3m_8m_3$. The additional amount of heat carried to the condenser, as compared to the case of adiabatic expansion, is $m_8e_8e_4m_3$. The heat utilized always equals the heat received minus the heat sent to the condenser. To make a comparison, let the heat received in two cases be the same; in one the expansion is adiabatic, in the other some curve, such as s_3m_8, is followed. The total heat received in each case is $e_1t_1t_3s_3e_4$, the heat sent to the condenser is $e_1t_1m_3e_4$ in the case of adiabatic expansion, and is $e_1t_1m_8e_8$ in the other case. In the case of adiabatic expansion the efficiency is $\frac{t_1t_3s_3m_3}{e_1t_1t_3s_3e_4}$. In the other case we must convert the area $e_4s_3m_8e_8$ into some area $x'''s_3m_8x'$, the area $x'''s_3m_3x'$ being a measure of the extra heat sent to the condenser and is therefore wasted. The efficiency in the second case is then $\frac{t_1t_3x'''x'}{e_1t_1t_3s_3e_4}$. These results point out a source of thermal loss in the steam-turbine.

Ex. 93. Compare the theoretical efficiency of a steam-engine and that of a steam-turbine, both taking steam at 150 pounds pressure; the expansion in the steam-engine is adiabatic to 3 pounds back pressure absolute, and that in the steam-turbine is adiabatic to 1/2 pound back pressure absolute, the initial condensation being 15% in the case of the engine and zero in the case of the turbine.

Deriving a Temperature-entropy Diagram from the Indicator-diagram.—The two diagrams above mentioned involve four variables, P, V, T, ϕ. If, by graphic means, we can pass from the PV or indicator-card diagram to a PT diagram, any T corresponding to any P is obtained. If from the PV diagram we can pass to

a ϕV diagram, any ϕ is at once obtained for any V whose P we already have. Having ϕ and T the ϕT diagram may be constructed.

As in Fig. 123, draw two axes at right angles to one another.

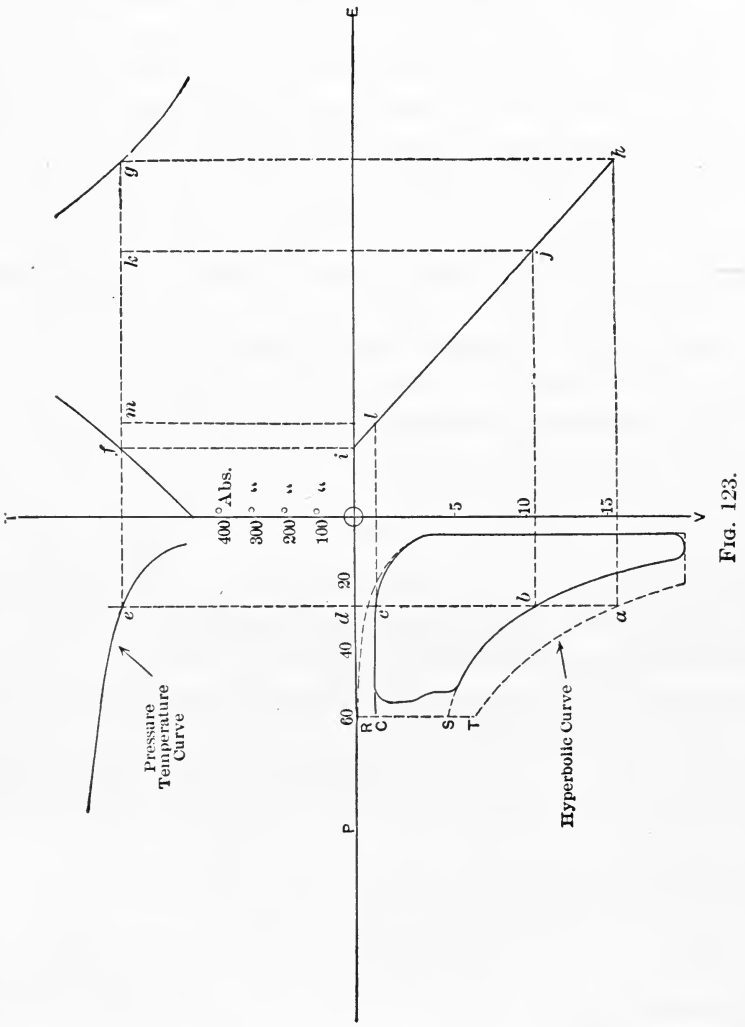

FIG. 123.

On OV volumes are to be laid off from zero volume.

On OP pressures are to be laid off from zero pressure.

On OT temperatures are to be laid off from zero absolute temperature.

On *OE* entropy is to be laid off in excess of the entropy of water at the assumed temperature, 32° F. in the above case.

If, in the given indicator-card, the hyperbolic curve is continued through the point of exhaust-closure to the line of steam admission, we have seen that *RS* is the measure of the steam that goes through the cycle, and *RT* can be laid off to measure the actual steam admitted per stroke. The indicator-card is to be placed in the *POV* quadrant with *R* in the line *PO* at such a point that *RO* measures the absolute pressure. It is convenient to lay off the entropy diagram as for one-pound weight of steam in this manner. From the tables we find that an even pressure of 27 pounds corresponds to an even volume of 15 cubic feet for one pound of steam. Through 27 pounds draw a line parallel to *OV*, intersecting the hyperbolic curve at some point *a*. From *a* drop a perpendicular on *OV* and call the intersection 15 cubic feet, thus determining the scale of volumes for a cycle of one pound of steam. After constructing the complete diagram, by merely changing the scale the dimensions for entropy or volume will suit the corresponding steam weight. For instance, if the actual weight were one-third of a pound, then on the new scale, three times as large as the present one, the volume corresponding to *a* would be 5 cubic feet.

From steam-tables take the temperatures corresponding to convenient pressures and so plot the *PT* curve in its proper quadrant. From entropy tables or an entropy diagram, the water and saturated steam lines may be laid off in the *TOE* quadrant.

The diagonal ϕV lines in the *VOE* quadrant should be drawn as required to avoid confusion, as there will be one of them for each point, *a*, etc., in the hyperbolic curve.

Project any point, *a*, in the hyperbolic curve vertically to the *PV* curve, obtaining *b* and *c* at the intersection of the projecting line with the indicator curves, and *d* the zero of volume point; project *e* on the entropy curves, thus determining *f* and *g*. Project *f* and *g* vertically and *d* and *a* horizontally, thus locating the ϕV line *hi*. Project *b* and *c* horizontally and obtain *j* and *l*; project the latter vertically and obtain the required points *k* and *m* on the steam line *fg*. Find other points of the ϕT diagram in a similar manner. (See Fig. 124.)

Carnot Cycle.—The conditions of this cycle are:

1. All heat to be received at one temperature, the highest possible.

2. All heat to be rejected at one temperature, the lowest possible.

3. Working substance cools from highest to lowest temperature through loss of heat equal to external work performed by it, i.e., expands adiabatically.

4. Working substance is heated from lowest to highest temperature by gaining heat equal to the external work done on it: adiabatic compression.

On the entropy diagram (Fig. 116) $t_3 s_3 m_2 m_6$ would represent a Carnot cycle between temperature limits t_3 and t_2. In the case of a steam-engine, assuming one pound of steam as going through the cycle, we should have one pound of water at the boiling-point, t_3, receiving heat equal to the area $t_3 s_3 e_4 e_3$ at a temperature t_3, expanding adiabatically, as shown by line $s_3 m_2$, to temperature $= t_2$, then losing heat $= e_3 e_4 m_2 m_6$ in the condenser at temperature t_2. The abstraction of heat must stop when conditions indicated by the position of m_6 are attained. In some way work would have to be performed on the mixture of steam and water, so that it would all be converted into water at temperature t_3. "This cannot be practically accomplished, but a system of feed-water heaters has been suggested and exemplified in the Nordberg engine, which is theoretically a close equivalent to it. Where steam is expanded in, say, three cylinders, the feed-water may be successively heated from the receiver intermediate between each pair, the effect of which is illustrated in Fig. 116. The expansion line follows the heavy line, being carried over to y by the first feed-water heater and to y' by the second feed-water heater. With an infinite number of such feed-water heaters, the line yy' would be parallel to $t_2 t_3$ and the cycle would be equivalent to that of Carnot.*

"Rankine Cycle.—This differs from the Carnot cycle in that the condensation does not stop at m_6, but is made complete by carrying it to t_2. We therefore have a pound of water at t_2. The second difference is that the water is heated by external heat from t_2 to t_3.

* Trans. A. S. M. E.

" Efficiencies of Ideal Engines.—The efficiency of the Carnot cycle is

$$\frac{t_3 s_3 m_2 m_6}{t_3 s_3 e_4 e_3} = \frac{T_3 - T_2}{T_3},$$

the efficiency of the Rankine cycle is

$$\frac{t_3 s_3 m_2 t_2}{t_3 s_3 e_4 e_2 t_2}.$$

† **" Ratio of Economy of an Engine to that of an Ideal Engine.** —The ideal engine recommended for obtaining this ratio is that which was adopted by the committee appointed by the Civil Engineers, of London, to consider and report a standard thermal efficiency for steam-engines. This engine is one which follows the Rankine cycle, where steam at a constant pressure is admitted into the cylinder with no clearance, and after the point of cut-off is expanded adiabatically to the back pressure. In obtaining the economy of this engine the feed-water is assumed to be returned to the boiler at the exhaust temperature. Such a cycle is preferable to the Carnot for the purpose at hand, because the Carnot is theoretically impossible for an engine using superheated steam produced at constant pressure, and the gain in efficiency for superheated steam corresponding to the Carnot efficiency will be much greater than that possible for the actual cycle.

" The ratio of the economy of an engine to that of the ideal engine is obtained by dividing the heat consumption per indicated horse-power per minute for the ideal engine by that of the actual engine."

Temperature-entropy Diagram of a Real Engine.—In Fig. 124 let $ABCD$ be the ideal diagram, or Rankine cycle, of an engine between temperature limits, as shown by the positions of the points A and D. As shown in this diagram the temperature at A is the temperature of the steam as it enters the engine. If the temperature at the throttle had been chosen the line AB would have greater ordinates, and if the boiler temperature had been chosen the ordinates would have been still greater.

---

† Trans. A. S. M. E. Standard Rules.

The point B represents the theoretical point of cut-off, but the real point of cut-off is represented by b and the real admission line by Ab. The heat lost by initial condensation is represented by the area between AB, Ab, and the full length of the ordinates through b and B.

Keeping in mind that the gain or loss of heat through doing or receiving external work produces no entropy change, and that therefore decrease of entropy means loss of heat as heat and increase of entropy means the reception of heat as heat, we see that the inclination of bb'' to the left indicates the loss of heat to the

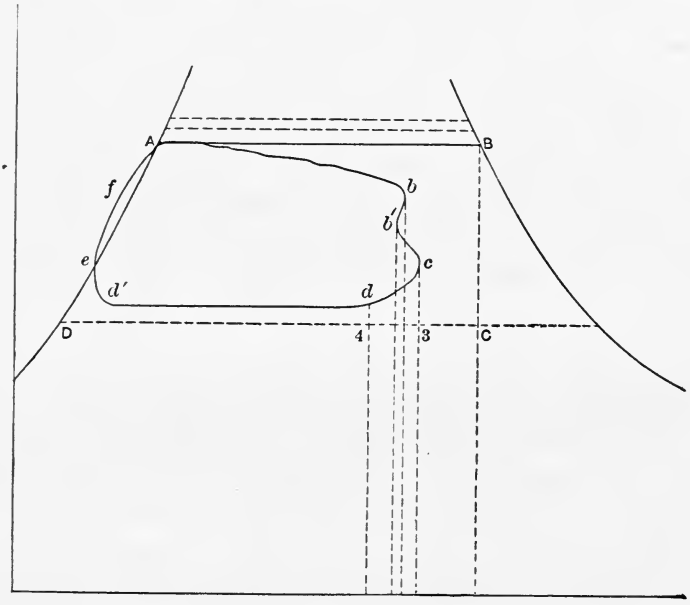

FIG. 124.

walls, and the inclination of $b'c'$ to the right shows that the walls are returning heat, but at lower grade, i.e., lower temperature.

The line $c'd$ indicates the changes in temperature and entropy due to expansion at constant volume. Had the cylinder been large enough in volume, adiabatic expansion from c' would have added an additional amount, $c'34d$, to the work done.

The line dd' indicates condensation at constant pressure and temperature. The fact that it does not coincide with $D4$ indicates

that there are resistances between the engine and the condenser, so that a higher pressure and temperature are required in the former to overcome the combined resistance of the condenser and passageways.

The departure to the left of $d'e$ from d', the point of exhaust-closure, indicates that the compression is not adiabatic and heat is given to the cylinder walls. The point e may be taken as the beginning of compression, and the cylinder clearance steam is dry saturated steam. The line eA may be considered as the water-line for the new charge of steam. It must be borne in mind that in the part of the cycle $Abc'dd'$ we are dealing with a constant mass, as the condenser may be assumed to be part of the cylinder. The part $d'fA$, on the other hand, deals with the much smaller clearance mass, so that steam and water at f may have less entropy than a weight of water equal to the full cylinder charge at the same temperature.

Ex. 94. A steam-boiler contains 5000 pounds of water and 50 cubic feet of steam at 100 pounds gage pressure. The barometer reading is 29.3 inches. What number of foot-pounds of energy will be developed by the water and by the steam if the boiler explodes? What volume of steam will be formed?

Ex. 95. Draw the Rankine cycle for the expansion of one pound of steam at 150 pounds per square inch pressure absolute to 1 pound per square inch pressure absolute and determine the efficiency.

Ex. 96. If the steam in the preceding problem had a quality of 80% (due to initial condensation) and expanded to 27 inches of mercury vacuum, barometer 29.5, find the efficiency.

Ex. 97. The steam-pressure on a steam-pump is 100 pounds absolute during the entire stroke. If the exhaust is at atmospheric pressure, 30.02 inches mercury, what is the efficiency?

CHAPTER IX.

CONDENSERS AND AIR-PUMPS.

A BRIEF description of two forms of condensers has been given already, but the influence of this vessel on the economy of steam-turbines and other engines using the highest possible grade of expansion is so great that a more detailed description of its requirements is necessary.

Two divisions may be made:

1. Condensers giving a vacuum ranging from fair to excellent.
2. Condensers giving little to no vacuum.

In the first class we have:

(*a*) Jet condensers.
(*b*) Barometric condensers.
(*c*) Ejector-condensers.
(*d*) Surface condensers.

In the second class are:

(*a*) Air-condensers.
(*b*) Evaporative condensers.

It is well known that the temperature of gases or vapors is some function of the rate of vibration of their molecules, and that the pressure exerted by the gases is some function of the rate of bombardment of their molecules on the containing vessel. When vapors condense there is an enormous decrease in both the amplitude and the rate of vibration, hence there is a great reduction of pressure. In the case of non-condensible gases, such as air, the reduction of pressure on cooling, of course, is not so great.

Jet Condensation.—In the jet, barometric, and ejector condensers the water and steam are brought into the most intimate

contact. The cooling or injection water is sprayed by some appropriate form of nozzle, and the steam is forced to travel one or more times through spraying cascades.

Both the cooling-water and the steam carry large quantities of air with them into the condenser. All this air being incondensible expands enormously in volume on reaching the condenser, on account of the reduction of pressure and the increase of temperature therein.

The condensed steam and water, in jet condensation, form a mixture. In some cases 2% to 5% of this mixture may be used as feed-water for the boilers and the rest runs to waste. If the injection water contains anything injurious to the boilers, all the water may be wasted.

Jet condensers were in common use in marine practice until 1865–70. It was common usage to feed the boilers with part of the discharge water from the condensers. As the injection was salt water containing 1/32 of its weight in common salt, calcium carbonate, magnesium carbonate, etc., it is evident that a large weight of solids would be left in the boiler water, the density of which would rapidly increase, as steam contains no solids. Some of these solids would be deposited as scale. The density of the water would be reduced by "blowing off" at a fixed high density and replacing the water "blown off" with water of the lowest obtainable density. The loss of heat in the water blown off was considerable.

The main differences in the three types of jet condensation are:

1. The air and water must be pumped from the jet-condenser, and it may or may not be necessary to pump the water in.
2. It is necessary to pump the air out of the barometric condenser, and the water must be pumped into an elevated tank.
3. In the ejector type the water is forced into the condenser at high velocity. This water in descending with high speed past a series of gills entrains or syphons air and steam from the main body of the condenser. The mixture of air and water passes away by gravity.

Jet Condensers.—This type is used in fresh-water navigation, in places where water is cheap and a vacuum is wanted either on

the score of economy or from the gain in power, but oily feed-water is feared. The spraying-nozzles clog at times with leaves, fish, and other débris; hence the design should provide for their ready removal. The diameter of the spraying-holes may be $\frac{1}{4}''$, and their total area may be three or more times the area of the injection-pipe.

The end of the suction-pipe should have a strainer and a foot-valve and be immersed in deep water. In rivers heavy cribbing is necessary to protect the pipe from ice and an accumulation of logs floating on the water surface. The suction-pipe should rise at a uniform grade without a single bend or dip. The water in this pipe is under less than atmospheric pressure, and the air therefore separates from the water and lodges at the highest bends. When enough air accumulates the "water will not lift" and the pump becomes inoperative. When the bend cannot be avoided a small pipe should be tapped in the top of the bend and then be connected to an air-pump or condenser.

Air Leaks.—It is exceedingly important to prevent the leakage of air into a condenser, as pumping out highly expanded air throws much unnecessary work on the air-pump. As the vacuum affects the net pressure on the L.P. piston, a loss of one or two inches of vacuum will reduce the economy of the engine materially.

The principal sources of air leakage are the stuffing-boxes of the L.P. piston-rod and of the air-pump rod; the various joints of the condenser, exhaust-pipe, and L.P. cylinder; the drip-cocks, or drain-valves, on the main or auxiliary engines which exhaust into the condenser. Absolute air-tightness of joints is difficult to secure. Even soldered joints will leak. Metal to metal joints are the best. To test the tightness of a condenser watch the needle move backward the moment the engines and auxiliaries are shut down.

Dimensions.—As is shown in Fig. 18, jet condensers are often made pear-shaped, the maximum diameter being twice the diameter of the exhaust-pipe leading into it. This shape tends to conserve the velocity of the water entering the condenser and causes the delivery to the air-pump of a mixture of air and water. Under these conditions the water absorbs considerable air, and in any case this mixture can be handled with greater uniformity of pump

motion than is possible when the air and water separate from one another. The volume of the condenser may be from one-fourth to one-half that of the L.P. cylinder.

Weight of Injection Water for Jet Condensation.

Let W = pounds of injection-water per minute;
t_1 = initial temperature of injection-water;
t_2 = final " " "

then $W(t_2 - t_1)$ is the heat absorbed by the injection-water per minute and must therefore equal the heat lost by the steam per minute. Now the total heat received by the steam per minute from all sources minus the external work done in the engine per minute is the heat above 32° F. sent to the condenser per minute,

$$= wH_t - \frac{\text{I.H.P.} \times 33{,}000}{778} = wH_c,$$

where H_t = total heat received from all sources above 32° F.;
H_c = heat (above 32° F.) per pound of steam as it goes to the condenser;
w = pounds weight of steam sent to the condenser per minute;
$w(H_c - (t_2 - 32°)) = W(t_2 - t_1)$, or, more accurately,
$w(H_c - q_2) = W(q_2 - q_1)$.

The diameter of the injection-pipe may be calculated by allowing a velocity of 600 to 800 feet per minute to the injection-water. A velocity in excess of this may be obtained when the condenser is much below the level of the surface of the water-supply. The pressure of the atmosphere then supplies the power to force the water into the condenser. Knowing the static head and assuming any velocity, the corresponding velocity and friction heads may be calculated. The sum of all the resistance heads should be less than the head that is equivalent to the difference of the pressure of the atmosphere and that in the condenser.

Ex. 98. Design a jet condenser for a 1000 horse-power engine using 15 pounds of steam per horse-power. Make a sketch showing size of injection-pipe, form of sprayer, number and size of holes in sprayer. Assume other conditions.

Ex. 99. Design a jet condenser and air-pump of type shown in Fig. 8 for a Corliss engine of 40 horse-power, using 25 pounds of steam per I.H.P. Assume other conditions.

Ex. 100. Design the suction-pipe line for Ex. 98. This pipe-line must cross a levee 15′ above mean low level of the river. Maximum and minimum river heights 10′ above and below mean low level. River bottom soft mud to a depth of 10 feet.

Barometric Condenser.—In many operations, steam must be condensed at some elevation above the ground. If this be over 35′ it is evident that the discharge-water would flow away by gravity. All that is necessary is to seal the end of the tail-pipe (discharge-pipe) in a tank or barrel of water. Fig. 125 illustrates a counter-current barometric condenser, so called because the cooling-water is flowing in one direction and the air in flowing to the vacuum-pump is moving in the opposite direction. In this case it is evident that only the air moves to the vacuum-pump, as all discharge-water flows away through the tail-pipe. It should be noticed in Fig. 125 that the final temperature of the air on its way to the vacuum pump is that of the incoming water, whilst in Figs. 17 and 18 it is the temperature of the discharge water. The weight and volume of the air to be handled in barometric condensers is very much less than in jet condensers. Serious accidents have happened by the use of improperly designed condensers. For instance, cases have occurred in which the water inside of the condenser acquired a gyratory motion and then, rising over 34′ high in the condenser, flooded through the engine exhaust-pipe, causing the breakage of the cylinder-head. When this type receives a larger amount of steam than usual, the current of steam and water may reverse and flood the air-pump. If the bottom of the discharge-pipe becomes uncovered, air enters and, forming ascending pistons, lifts the water (as in the Pohle air-lift in wells) and may cause the flooding of the cylinder. As the passageway for the air to the pump may be very much constricted by water, ample passageway should be allowed. The spray-tubes are very liable to become choked, and the injection-pipe should deliver into a tee on the sprayer, so that by the removal of two blank flanges the latter may be easily cleaned (Fig. 262). Condensers of this character are used in connection with vacuum-pans and multiple effects in

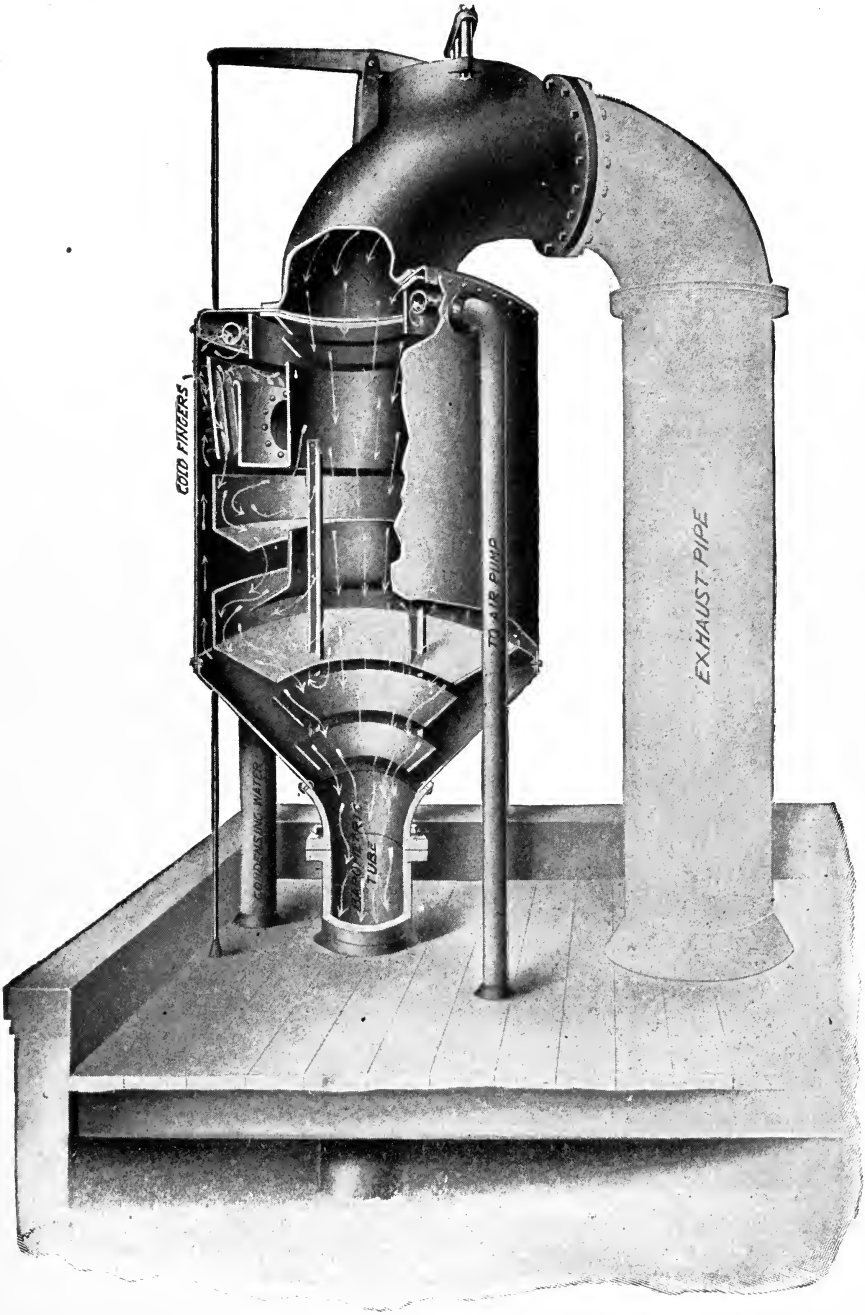

FIG. 125.—Heisler Induced Circulation Counter-current Condenser.

sugar-houses, condensed-milk factories, and in chemical industries where there is much boiling done at pressures less than atmospheric pressure.

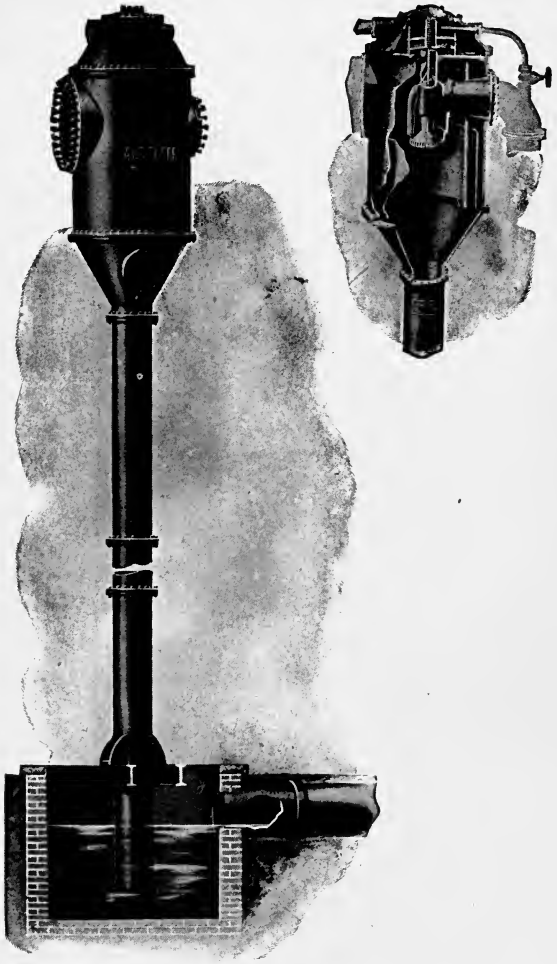

FIG. 126.—Alberger Barometric Condenser.

Syphon, Ejector, or Injector Condensers.—A remarkable degree of vacuum may be obtained, without the use of an air-pump, by means of condensers of the form shown in Fig. 127. Its most important and essential feature is a suction-gill, so arranged that the steam, vapor, and air may be drawn into the discharge-

water. This action is due to the high velocity of the water entering the contracted orifice above the gill, and since the sum of the static, velocity, and friction heads must be constant, it is evident that if the velocity-head is increased the static head will be decreased.

In tests made with an injector-condenser of this type in winter in New York the condenser pressures varied from 0.82 pound to

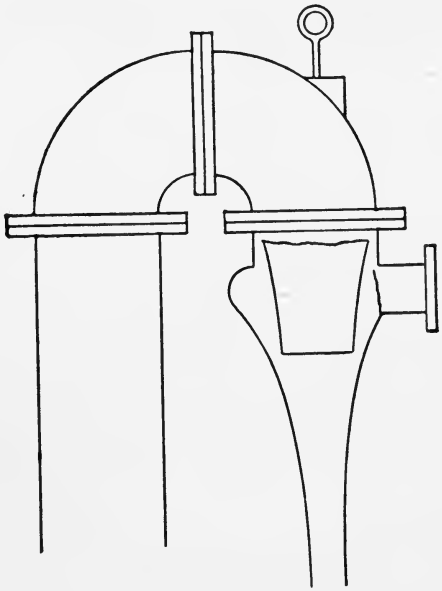

FIG. 127.

1.25 pounds absolute, the engine varying from 340 to 1004 I.H.P. An objection to this condenser, when used with variable loads, is that the same volume of water is required to fill the throat regardless of the load.

Surface-condensers. — The Alberger condenser (Fig. 128) has several unique features. The exhaust-steam enters either at the bottom or at the side near the bottom. The cooling-water enters at the top and leaves at the bottom. The object of this arrangement is to obtain a full counter-current transfer of heat. The steam as it rises is condensed, and the water thus produced falls down against the incoming steam and is removed by a hot-well

pump. On account of this intimate contact the feed-water acquires the same temperature as the steam. The air left after condensation, before being withdrawn by the dry-air pump is cooled by passing over the tubes containing the coldest circulation water.

In the lower part of the condenser-shell is a diaphragm to distribute the steam to all parts of the condenser. The method of changing the direction of flow of the cooling-water is similar to that shown by the arrows in Fig. 16.

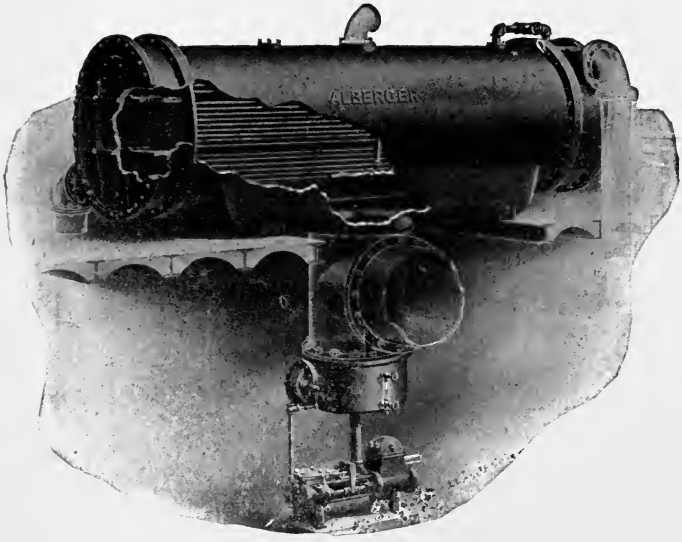

FIG. 128.—Alberger Surface-condenser.

A high vacuum may be obtained by the use of a surface-condenser. Such a vacuum is not necessarily economical in practice. The vacuum that gives the best economy will vary with the ratio of expansion of the engine. When there is a big drop in the pressure between the engine and the condenser, increasing the drop by an excessively high vacuum may be very uneconomical. In other words, the extra gain in work does not compensate for the increased loss in heat-units caused by the increase in initial condensation, colder feed-water, increased cost of pumping greater quantities of cooling-water, and the interest on the increased size of air- and circulating-pumps, condenser, etc.

On the contrary, if the steam can be expanded in the engine

to any back pressure, however low, theoretically there would be an enormous gain in reducing the condenser pressure to the lowest possible amount. In the steam-turbine there is no trouble with initial condensation, and it was expected that there would be a great advance in economy from the greatly increased ratio of expansion possible. As a consequence machinery for the production of a vacuum of 29″+ has been devised. The entropy diagram will show that if steam is expanded adiabatically to 40 or 50 times its original volume, theoretically some 20% of it would be converted into water. As it is the province of the steam-engine to convert heat into work, the above effect would be very desirable. Unfortunately, from causes explained under the head of turbines, much of this water from friction is converted back into steam. It is evident that this causes a loss in the external work done, since the latter is the difference between the heat entering the turbine and that going to the condenser.

Amount of Cooling-water.—The amount of cooling-water per pound of steam entering a surface-condenser is somewhat greater than it is in the case of jet condensation, as the range of temperature of the cooling-water is less. As an engine converts into work only 10 to 15% of the heat it receives, in practical design, it is not important to be particular about the pressure at which the heat is sent to the condenser since H does not vary greatly with the pressure. Evidently t_1 is not only indeterminate in such cases but is also variable and a variation of three degrees in its assumed value has a material effect on the value of W.

Let t_1 = the initial temperature of the cooling-water;
t_2 = the final temperature of the discharge-water;
t_3 = temperature of the condensed steam;
He = heat in the steam entering the condenser above 32° F.;
w = weight of steam entering the condenser per minute;
W = weight of injection-water per minute.

Then $w\{He-(t_3°-32)\}=W(t_2-t_1)$, or, more accurately,

$w(He-q_3)=W(q_2-q_1)$.

The outside diameter of condenser-tubes is 1/2″, 5/8″, or 3/4″; thickness of metal, .049″; the spacing is 1 1/2 diameters; length from 6′ to 16′, but supported at 5′ spaces; composition Cu, 70, Zn, 29; Sn, 1, or Admiralty metal; packed by screwed glands 7/8″ diameter and cotton tape.

In ordinary land service the cooling-surface is 1 sq. ft. for every 10 pounds of steam the engine uses: with high vacua, as with turbines, 1 sq. ft. for 4 to 8 pounds of steam is allowed. The velocity of water through the tubes is from 150 to 200 feet per minute.

Heat Transfer through Metals.—Many experiments have been made on the rate of heat transfer through heating-surfaces. When the difference of fluid temperatures at the two surfaces is very high, as in steam boilers, the rate of heat transfer probably varies with some power, probably the second, of the difference in the two temperatures. In surface condensers the difference of fluid temperatures at the inside- and outside-tube surfaces is so small that the rate is generally taken as varying with the difference of the temperatures only.

Motion only ensues when there is a difference of pressure, and heat only passes when there is a difference of temperature and the rapidity depends upon the temperature gradient, or, in other words, the latter depends upon the rapidity with which the heat is taken away. The temperature fall in the metal itself is always very small. The principal falls occur in the soot, grease, scale, inert gases or liquids adjacent or attached to the two metal surfaces.

We note that—

1. As the water passes along a tube and increases in temperature the efficiency of the heating-surface gradually diminishes; therefore
   - (*a*) the cooler the injection the greater the efficiency.
   - (*b*) Long tubes must be inefficient compared to short tubes and disregarding the amount of water used.
   - (*c*) The higher the vacuum the lower the steam vapor temperature, therefore the efficiency of heat transfer is low and the necessity of cold injection for record tests is greater.

2. If the tubes are coated with any non-conductor of heat the efficiency will be lowered. Grease and scale are evident examples, but there are others of equal importance. Air in a condenser acts as a non-conducting blanket, and whilst it is important at condenser temperatures ranging from 140° to 120° F., at 80° F. the presence of air having a pressure of .2″ mercury is prohibitive of all heat transfer.*

* London Engineering, 1906.

3. Increasing the rapidity of motion of water through the tube increases the efficiency of heat transfer. The rise in temperature of the water will be less, but at high velocities the product of the weight of cooling-water and its rise in temperature will be greater than that same product at low velocities.

Professor Perry's Theory.—This theory is given as applied to a boiler tube, but it applies in a measure to condenser tubes as the steam takes the place of the hot gases and the water is the quantity heated in both cases. According to this theory the rate at which heat is imparted to a boiler tube is proportional to:

1. The difference of temperature between the hot gases and the metallic surface.
2. The density of the gases.
3. The velocity of the gases parallel to the metallic surface.
4. The specific heat of the gases at constant pressure.

The heat transmitted per second per unit of heating surface is

$$H = Cpv(T_1 - T_2);$$

where H = the amount of heat transmitted;

C = the specific heat multiplied by a constant;

v = velocity of gas parallel to the metallic curface;

p = density of the gas.

That the heat imparted should depend upon the difference of temperature is self-evident. Experiments seem to show that it does not depend upon a higher power of the temperature difference than one. Weiss, for instance, makes it depend upon the square of the temperature difference, but Josse's experiments do not favor this exponent.

Heat is imparted by molecular impact and the greater the number of these impacts per unit of area and per unit of time the greater the molecular vibration of the metallic surface. As the number of impacts is proportional to gas density, it is evident that density should be one of the factors in the transfer of heat.

The effect of a blow is lessened if there is a cushion between the striking and the struck object. If we imagine a number of

inert gas molecules entangled in the spaces between the metallic molecules and holding other gas molecules by attraction at the metallic surface we have such a cushion. (See Fig. 129.) If the heating gas passes with a strong current so that these inert, non-moving, cold gas molecules are swept away it is evident that a stronger blow will be struck on the metallic surface and hence more heat will be conveyed. That the value of H will depend upon v is the more evident when we remember what poor conductors of heat all gases are. In all forms of steam condensation, it is noticeable how violent the boiling action is directly opposite the induction steam-pipe if baffles or deflectors

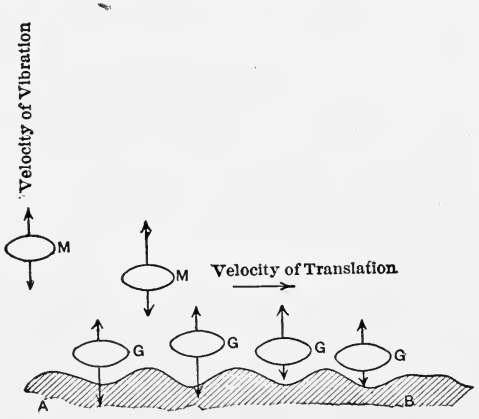

FIG 129.

are not placed in front of it. A strong steam current over the entire cooling surface is necessary for a high mean rate of condensation per square foot of cooling surface. As gas currents take the lines of least resistance it is evident that their direction of flow must be compulsory to avoid short circuits, air pockets, and dead ends in which there is no circulation.

All gases at the same temperature, pressure, and volume contain exactly the same number of molecules. (Avogadro's Law.) But they require and give up different amounts of heat. The latter depends upon the specific heat of the gases, hence the heat given up should vary with the specific heat. In the case of condensers this factor is merged in other empirical factors.

Heating or Cooling Surface.—The value of any one of the four factors in the equation below is easily deduced after we have obtained the proper value of the other three.

$$H = FAT_m.$$

This equation is applied to surface condensers, feed-water heaters, multiple effects, vacuum-pans, or any form of apparatus where heat is given up by a hot fluid and absorbed by a cooler one through some metallic surface.

In this formula,

H = the total heat transmitted in B.T.U. per hour through the entire heating surface, A;

F = the number of B.T.U. transmitted per square foot of heating surface per degree difference in temperature in degrees F. between the heating and cooling fluids per hour;

A = area of the heating surface in square feet;

T_n = the *mean* difference in temperature in degrees F. between the hot and cold surfaces for *one hour*;

W = the pounds of cold water passing through the heater per hour;

T_s = temperature of steam to be condensed (at constant pressure);

t_h = temperature of the hot liquid (if other than steam) at any point;

t_{h_1} and t_{h_2} are initial and final temperatures of the hot fluid;

t_c = temperature of the cold fluid at any point;

t_{c_1} and t_{c_2} are initial and final temperatures of the cold fluid;

$t_h - t_c$ = the difference in degrees F. between the hot and cold fluid at any point.

The Mean Temperature, T_m.—In an endeavor to find the mean temperature between the heating and cooling sides we see that four cases may occur:

Fig. 130. The hot fluid maintains a constant temperature and there is a continuous rise in temperature in the cold fluid;

Fig. 131. The cold fluid has a constant temperature but the hot fluid varies in temperature;

Fig. 132. Both fluids change in temperature and both flow, in the same direction, in currents parallel to the heating surface.

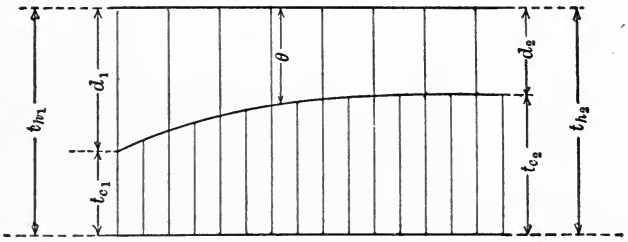

FIG. 130.

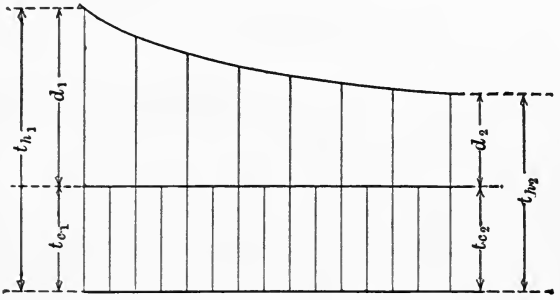

FIG. 131.

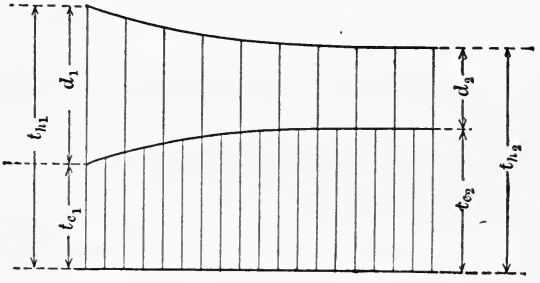

FIG. 132.

FIG. 133.

This would occur in concentric tubes, one carrying the cold and the other the hot fluid;

Fig. 133. Both fluids change in temperature but both flow in opposite directions parallel to the heating surface.

The following discussion is limited to the case of feed-water heaters, as is illustrated by Fig. 130. Steam at constant temperature, T_s, gives up heat to water, raising its temperature from t_{c_1} to t_{c_2}.

Formula for T_m.—*Case I.*—In a time dt the temperature of the water will rise an amount $d\theta$ where $\theta = T_s - t_c$.

$$FA\theta dt = Wd\theta = \text{heat transferred in time } dt,$$

$$FA\int_0^t dt = W\int\frac{d\theta}{\theta} = W\log_\varepsilon\theta\Big]_{T_s-t_{c_2}}^{T_s-t_{c_1}} = FAt.$$

Let $t=1$ hour,

$$FA = W\log_\varepsilon\frac{T_s-t_{c_1}}{T_s-t_{c_2}}.$$

As FA = the number of B.T.U. transmitted by the heating surface per hour for one degree difference in temperature,

$$FAT_m = W\cdot\log_\varepsilon\frac{T_s-t_{c_1}}{T_s-t_{c_2}}\cdot T_m = \text{total heat transmitted} = W(T_{c_1}-T_{c_2}).$$

$$\therefore\quad T_m = \frac{T_{c_1}-T_{c_2}}{\log_\varepsilon\dfrac{T_s-T_{c_1}}{T_s-T_{c_2}}} = \frac{(T_s-t_{c_2})-(T_s-t_{c_1})}{\log_\varepsilon\dfrac{T_s-t_{c_1}}{T_s-t_{c_2}}} = \frac{d_2-d_1}{\log_\varepsilon\dfrac{d_1}{d_2}},$$

where d_1 = difference in temperature between the hot and cold fluids initially,

d_2 = difference in temperature between the hot and cold fluids finally.

In fact, according to Grashof, Theoretische Maschinenlehre, **1**, the mean temperature in each of the four cases is given by the formula.

$$T_m = \frac{d_2-d_1}{\log_\varepsilon\dfrac{d_1}{d_2}}.$$

For example, in an opposite current condenser, the cold liquid enters at 50° F. and leaves at 176° F.; the hot liquid

enters at 212° F. and leaves at 122° F. What is the mean temperature. Here $d_1=36°$ F., $d_2=72°$ F. Hence $\frac{36}{\log_e 2}=\frac{36}{.69}=$ 51.9° F. This is a case of the cooling of water coming from condensed steam.

When vapors are cooled the operation should be divided into two parts. In the first part the vapor is cooled and condensed at constant temperature and in the second the resulting liquid is cooled at a varying temperature to some lower temperature. During these two operations the factor F is quite different, as will be seen. The mean temperature difference, T_m, should be obtained for each operation.

Feed Heaters.—Feed heaters should accomplish much more than heating the feed-water important as that is. It is only in recent years that proper attention has been given to the steam-boilers and, owing to the high development of steam-engine economy, it is often possible to obtain greater economy by attention to boiler management than to refining the engine-room economics. For high boiler efficiency it is absolutely essential to obtain a supply of feed-water free of salts or scale-forming substances, oil, gases, acids, alkalis or organic matter. In brief, feed-water should be pure and as hot as it is possible to get it.

The thermal efficiency of an injector used as a boiler feeder is 100%, but that does not make it necessarily a better feeder than a boiler feed-pump whose thermal efficiency may be only 1/50 of that of the injector. If the exhaust from the steam-pump is sent to an open feed heater the thermal efficiency of pump and heater becomes 100% approximately if radiation is neglected. The injector using live steam from the boiler is therefore far less efficient than the pump, as its steam pumps and purifies the feed-water. Injectors are unreliable with hot water and are unreliable as pumps if the resistance is liable to fluctuation. Injectors cannot be used to pump water that has been heated in a heater nor can they be used as pumps to send water through heaters, since the water has been so heated in the injector as to make the heater inoperative. Injectors do not remove any foreign matter whatever from the feed-water, and the decrease

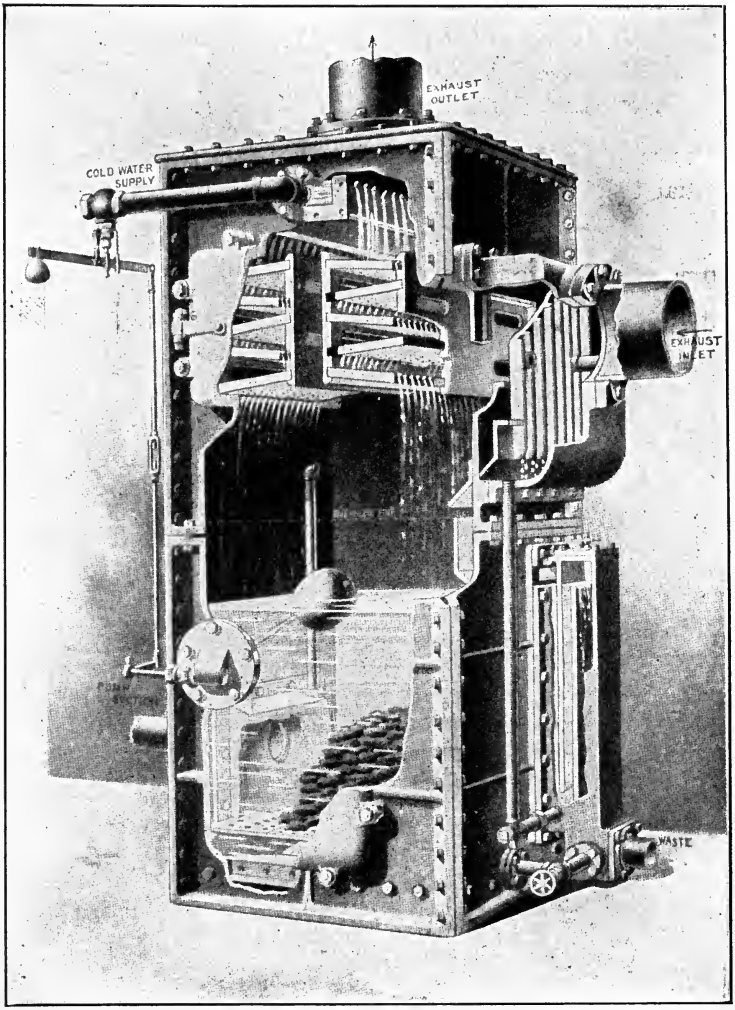

FIG. 134.—The Cochrane Heater and Purifier for use in connection with Engines or Pumps exhausting freely to the atmosphere.

in economy due to the formation of scale, the destruction of the boiler due to acids or alkalis must be charged to the injectors.

Feed-heaters may be divided into three classes:

1. Open-feed heaters;
2. Closed-feed heaters·
3. Feed purifiers.

Choice of a Feed Heater.—In choosing a feed heater it is essential to keep in mind all the requirements of the situation.

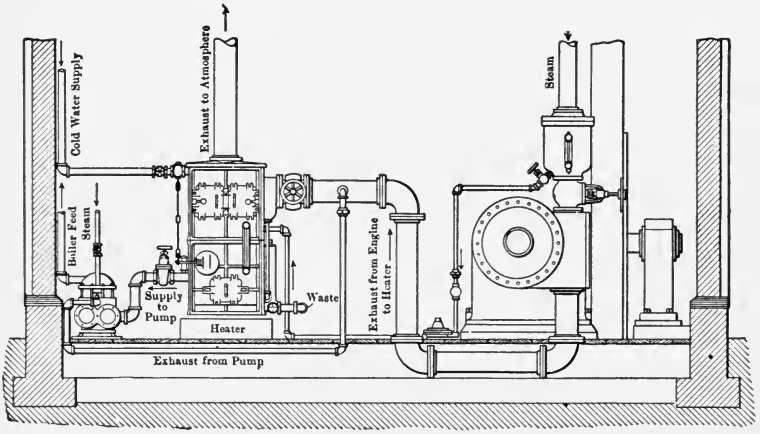

FIG. 135.—A conventional illustration showing the general method of connecting up a Cochrane Feed-Water Heater and Purifier, where all of the exhaust is passed through heater—engine exhausting free to atmosphere at all times. Pump exhaust entered into main line ahead of heater. Direct and free feed line from heater to pump. Heater foundation as high, or preferably higher than pump foundation. Live steam drips saved by returning to heater through steam trap. Direct connection to cold water supply. Waste piped direct to sewer or other convenient point not higher than bottom of heater, and without any valves in the line.

In practically all cases the oil must be removed. Once water and oil are mixed it is almost impossible to separate them, hence the oil should be removed from the steam by the use of a separator. The other requirements are fixed by the composition of the feed-water. Volatile gases should be driven out. Some salts are precipitated around 212° F. but others are precipitated only at high temperatures. Some feed-waters form scums and some do not. Hence scum removers, settling-chambers, cham-

bers holding chemicals to cause precipitation may or may not be necessary.

Open-Feed Heaters (Figs. 134 and 135).—Open-feed heaters are simple in construction, are exposed only to one or two pounds pressure, are efficient as the steam is brought into direct contact with the feed-water, neither deteriorate nor lose their heat transfer capacity and being of ample capacity serve as hot wells. All the volatile gases are expelled, thus enormously reducing the work of air-pumps; they are equipped with means of purifying the water of oil and various salts, carbonates of lime, and magnesia for instance; have settling and filtering chambers in addition to oil-separator.

Exhaust steam in condensing will give up enough heat to raise six to ten times its own weight of water from ordinary temperature to 203° F., which is about as high as open-feed heaters can heat. Hence they cannot utilize the entire exhaust from the main engines for feed heating. But the exhaust from a few pumps will supply this heat and therefore a condensing plant should turn their exhaust into feed heaters. In so doing they far exceed the main engines in economy.

Closed Feed Heaters (Fig. 136).—Closed-feed heaters are those in which the heat is transferred through some form of heating surface to the water in a vessel which is closed, so that the water may be heated above 212° F. This heater is best suited to water which is free from scale-forming deposits and volatile gases. For instance, carbonates are precipitated when the CO_2 is driven out of the water. In closed heaters if the CO_2 is not driven off these salts will be deposited on the boiler tubes. This will happen if the valve placed for this purpose on the heater is not opened to permit the gases to escape.

The closed type of heater is subject to boiler pressure and the corresponding strains and accidents; it is not as economical as the open heater, and becomes less so as the tubes become covered with scale; it is difficult to remove the scale from its tubes; a coating of oil on its tubes renders them less efficient; the condensed steam is ordinarily wasted; the precipitate does not settle owing to the agitation of the water.

It is extremely desirable to reduce the amount of gases passing

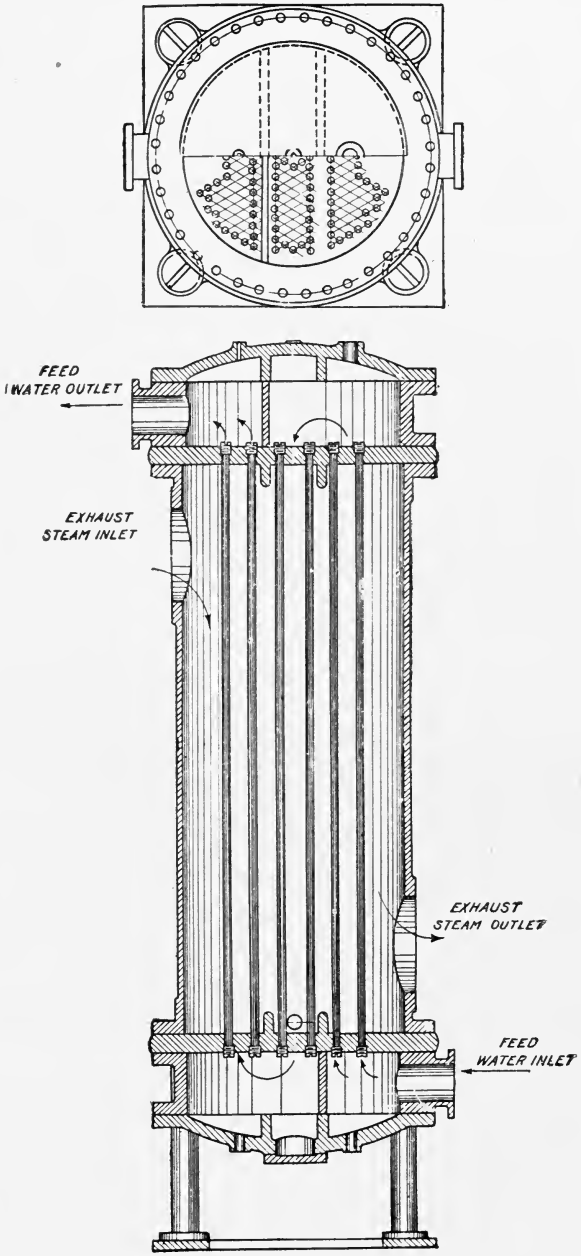

WHEELER CONDENSER & ENGINEERING CO'S FEED WATER HEATER

FIG. 136.

into the condenser when high vacua are desired. These gases interfere with the economy of the condenser and increase materially the load on the air-pump. In the open heaters these gases are driven out automatically.

In the design of a closed heater, in addition to the properly arranged heating surfaces to abstract all the heat possible from the steam, other requirements arise from the necessity of maintaining that efficiency with the least amount of trouble. Being under boiler pressure the heads must be stayed if not thick enough to withstand expected pressures. Grease may be removed by gentle boiling in a strong alkali and scale by subsequent boiling in a weak acid solution. Do not mix the acid and alkali.

Percentage Gain in Using Feed Heaters.—The theoretical gain in percentage by the use of feed-water heaters is easily shown.

Let H = B.T.U. in one pound of steam at boiler pressure;

q_1 = B.T.U. in one pound of water as delivered from the heater;

q_2 = B.T.U. in one pound of feed-water before being heated;

p = percentage gain.

Then,
$$p = \frac{q_2 - q_1}{H - q_1}.$$

Suppose one pound of unheated feed-water at 60° F. is raised to 202° F. in an open heater and is then forced into a boiler at 100 pounds gage, what is the percentage gain? From the tables, $H = 1184.9$,

$$p = \frac{170.5 - 28}{1184.9 - 28} = 12.3\%.$$

Theoretically, then, the gain is 1% for every 12% gain in feed-water temperature. There are, however, a number of gains that cannot be calculated easily in percentage. The heater drives air and carbonic acid out of the water and so lessens oxidation in the boiler and makes the air-pump work much lighter if a condenser is used. The circulation of the water in the boiler is undoubtedly improved and the economy of the boiler from that cause is improved. An undoubted gain is the furnishing

of pure soft water to the boilers thus reducing the formation of scale and prolonging the life of the boiler. Most heaters are provided with means to remove oil from the steam where the water is used to feed boilers. The percentage gain then varies from 1.2 to 1.4% for each increase of 10° in the feed-water.

Relative Value of Feed-water Heaters and Economizers.—Feed-water may be heated by the hot gases which would otherwise go to waste and it becomes a question as to which is the better source to look for economy. In England, where the

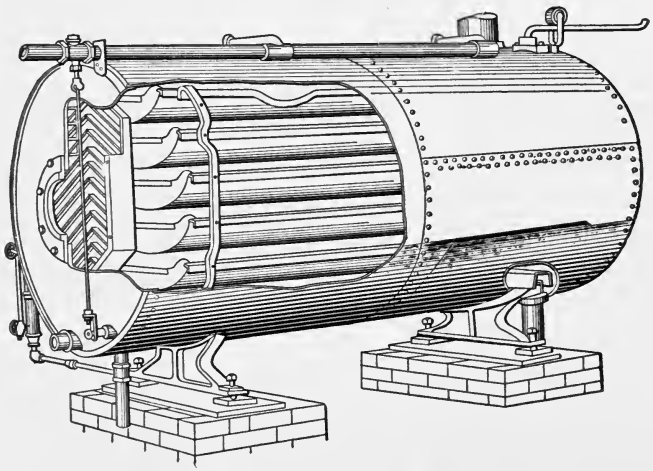

FIG. 137.—Hoppes Heater.

boilers have less heating surface than those in this country, economizers are used extensively.

Economizers cannot purify the water, neither do they serve to remove any of the absorbed gases. The purchaser has to consider the relatively high initial cost; the high cost of upkeep; a high rate of depreciation; the difficulty of keeping the apparatus in an efficient condition; the value of the space occupied; its effect on the draft or the cost of forced draft. No hard and fast rule can be laid down and each case must be considered on its merits.

Closed Purifiers.—Fig. 137 represents a closed purifier. The purifier is generally placed over the boiler. The water is pumped into the boiler and trickles over the pans. It then comes in

contact with the steam from the boiler at boiler pressure and temperature. Many salts are deposited at the high temperatures attained which would not be precipitated at lower temperatures. It is important to take the steam to run pumps and other auxiliary machinery from the top of the purifier and in that way remove gases arising from the feed-water. From the purifier the water runs into the boiler, through the regular gate and check valves, by gravity.

It is generally contended that there is an economic gain in taking steam from the boiler to heat the feed-water, as is done in purifiers. There will certainly be a gain if salts are removed which would scale up the boiler. Independent of this reason, it is contended that the hotter feed-water causes an increased circulation of the water in the boiler. Recently, however, some experiments were made which seemed to discredit the above theory. The question is still open.

Heating Surface in Feed Water Heaters.—In the open heaters and the closed purifiers there is no heating surface as the steam and water are brought into intimate contact. In these vessels a large volume must be used to divide the steam and water into thin divisions to bring about the necessary intimate contact. In the closed-feed heater the heating surface must be calculated.

Instead of finding the mean temperature by calculus the arithmetical mean is often used. In Case I, Fig. 130, for instance, such a mean would be

$$T_m = t_{h_1} - \frac{t_{c_1} + t_{c_2}}{2}.$$

Value of the Heat-transfer Factor F.—The ability of a heating surface to transfer heat is far greater than the amount of heat which is actually transferred. The resistance to heat transfer does not lie in the molecular resistance of the metal but in the resistances at the two surfaces, as is shown in the discussion of Professor Perry's theory.

In surface condensers, for instance, the factor F is dependent upon the density of the steam, its velocity of flow, the velocity of the water squared (or perhaps cubed), the amount and character of the incrustation of the cooling surfaces, the position and

direction of the cooling surfaces, width and capacity of the condenser space, and whether the tubes are drowned with water from above or blanketed by air which is not driven off by the current of the steam.

In closed-feed water heaters, receiving steam at atmospheric pressure, the value of F is often taken to be proportional simply to the velocity of flow of the water. This assumes all other conditions to be normal and at their best. For instance, if the arithmetic mean of the temperatures be taken, practical results are obtained if F is taken in B.T.U. per hour the same as the velocity of flow of the cooling water in feet per minute. Thus, if the cooling water flows at 200 feet per minute then F is 200 B.T.U. per hour per square foot per degree F. difference of temperature. If the logarithmic difference be taken, then an assumed value of $F=325$ B.T.U. seems to give better results.

Example.—What amount of heating surface is necessary to heat 50,000 pounds of water per hour from 40° to 200° F. with steam at 212° F.

$$T_m=212-\frac{200+40}{2}=92,$$

$$\frac{50{,}000(200-40)}{200\times 92}=435 \text{ square feet,}$$

or using the logarithmic mean temperature and 325 for the coefficient,

$$325A=50{,}000 \log_e \frac{212-40}{212-200},$$

$$A=410 \text{ square feet.}$$

Primary and Secondary Heaters.—If the steam on its way to the condenser passes through a heater we can raise the feed-water from 40° F. (winter conditions) to 110° F. if the vacuum carried is 26 inches, corresponding to a temperature of 126° F. The feed-water at 110° F. can be raised to 205° F. in another heater where exhaust steam from pumps or other non-condensing engines is used as the heating medium.

The preceding method may be used to find the amount of heating surface in a primary and secondary heater to raise

50,000 pounds of water per hour from 40° F. to 205° F. if the main engine carries a vacuum of 26 inches.

$$T_m = 126 - \frac{40+110}{2} = 51, \quad \frac{50{,}000(110-40)}{200+51} = 343 \text{ square feet;}$$

$$T_m = 212 - \frac{110+205}{2} = 55, \quad \frac{50{,}000(205-110)}{200\times 55} = \frac{432 \text{ square feet}}{775 \text{ total area in both heaters}}.$$

Factor F, according to Hausbrand.—In finding the rate of heat transfer Hausbrand divides the operation into two parts. In the first part the factor F is large, as it is applied only to the cooling surface at which steam is condensed. In the second part a lower factor is used, as it is applied only to the cooling surface at which the condensed steam is cooled below its boiling-point to some lower temperature.

In thermal units, B.T.U., per square foot per hour per one degree difference, the factor is

$$F = 57\sqrt{V_d}\sqrt[3]{0.023+V_f},$$

where V_d is the velocity of the steam in feet per second and V_f is the velocity of the cooling water in the same units.

The table below is for F at various velocities of the cooling water in feet per second, but for a steam velocity of *one* foot per second. For any other steam velocity, with any of the *tabulated* velocities of the water, the proper F is determined by multiplying the tabulated value of F by the square root of the steam velocity in feet per second.

TABLE A.

V_f of cooling water in feet..	0.003	0.026	0.066	0.5	0.75	1.00	1.5	2.0	3.0	5.0	7.5	9.0	10.0
F in B.T.U.....	17	21	25	46	52	57	65	72	82	97	112	118	124

The Coefficient of Transmission of Heat, F, between two liquids at different temperatures may be found from the equation

$$F = \frac{40}{\frac{1}{1+\frac{10}{3}\sqrt{v_{f_1}}} + \frac{1}{1+\frac{10}{3}\sqrt{v_{f_2}}}},$$

where v_{f_1} is the velocity in feet per second of one liquid and v_{f_2} is the velocity of the other in the same units. For certain velocities the value of F is tabulated below in B.T.U. per square foot of cooling surface per hour per degree F. difference of temperature:

TABLE B.

v_{f_2}.	v_{f_1}.								
	0.25	0.36	0.49	0.64	0.81	1.00	1.96	3.00	4.00
0.25	53	57	59	62	64	66	73	77	79
0.36	57	60	63	66	69	71	79	83	85
0.49	59	63	67	70	72	75	83	89	93
0.64	62	67	70	73	75	79	88	94	99
0.81	64	69	72	75	80	83	93	101	105
1.00	66	71	75	79	83	86	96	105	111
1.96	73	79	83	88	93	96	106	123	130
3.00	77	83	89	94	101	105	123	135	144
4.00	80	87	93	99	105	111	130	143	154

In endeavoring to apply these formulas to a condenser the variety of conditions encountered therein will be made apparent. The formulas show possibilities for future improvement, pointing out surface efficiencies that ought to be attained but are not and indirectly indicating the reason therefor.

Suppose that we are required to find the cooling surface per 100 pounds of steam, exhausted at 10 pounds absolute, 193° F.; temperature of injection, 60° F.; temperature of discharge, 90° F.; temperature of feed-water, 110° F.; velocity of cooling water, 200 feet per minute. Assume other data as required.

To condense the steam to water at its boiling-point, 193° F., will require the absorption of its latent heat or 978.8 B.T.U. per pound. To cool the water from 193° to 110° F. will require the absorption of 83 B.T.U. or about 1/12 of the former quantity. Ideally then the range of the injection from 60° to 90° F. should be divided into twelve parts and one of those parts should be devoted to cooling the condensed steam and eleven should be devoted to condensing the steam. The range of temperature of the injection would be 60° to 63° F. for cooling and 63° to 90° for the condensing.

$$T_m = \frac{(193-63)-(193-90)}{\log_e \frac{130}{103}} = 117° \text{ F.},$$

$$T_m = \frac{(193-63)-(110-60)}{\log_e \frac{130}{50}} = 83°.$$

These temperatures do not differ materially from the arithmetical means.

The velocity of steam as it strikes the tubes may be very much less than its velocity in the exhaust-pipe. Similarly the velocity of the descending hot water *on* the tubes is indefinite. We are not interested in its velocity in falling from tube to tube. Let us assume 5000 feet per minute as the velocity of the steam and 40 feet per minute for the velocity of the hot water on the tubes. Hence $V_d = 83.3$, $v_{f_1} = .66$ feet, and $v_{f_2} = 3\frac{1}{3}$ feet. F (from Table A) $= 84$; $\sqrt{v_d} = 9.1$, F (from Table B) $= 95$.

Heat transmitted per square foot of cooling surface

Condensing $= (9.1)(84)(117) = 89{,}400$ B.T.U.,
Cooling $= (83)(95) = 7{,}885$ B.T.U.

To condense 100 lbs. steam requires $\frac{100 \times 978.8}{89{,}400} = 1.1$ sq. ft.;

To cool 100 lbs. water requires $\frac{100 \times (193-110)}{7885} = 1.06$ sq. ft.

Hence $\frac{100}{1.06+1.1} = 46$ pounds of steam are condensed and cooled per square foot of cooling surface.

As this result is not secured in practice under the given circumstances it is important to discuss the causes of the difference. In the first place, it is seen that the transmission of heat in condensing is ten or a dozen times that in cooling. If therefore any of the condensing surface is water covered all the time, since its rate of heat transmission is enormously reduced, it is evident that a very great increase must be made in the cooling surface to make up for the loss of the more efficient surface.

Suppose, for example, that one-half of the *condensing* surface is water covered. Then one-half of 89,400 B.T.U. must be transmitted by water-cooled surfaces. Then $\frac{44{,}700+8300}{7885} = 6.7$ square

feet of cooling surface will be required As the condensing surface is now .55 feet, we have $\frac{100}{6.7+.55}=13.8$ pounds of steam condensed and cooled per square foot of cooling surface.

In the contraflo type of condenser an average of 33 pounds of steam were condensed and cooled per square foot of cooling surface. The rate for the upper tubes was much higher than this. It is instructive to examine the tables and note the effect that the velocity of steam and cooling water has on the coefficient of heat transmission.

Contraflo Condensers.—"A leading feature of this type of condenser is a compartment draining of the feed-water (Figs. 138, 139). The condenser is divided into three compartments by two diaphragms somewhat inclined to the horizontal, and the water of condensation in each of the three compartments is drained off directly from that compartment, so that the surfaces in the lower compartments are unimpeded in their condensing action by water from the upper compartment flowing over them. As the major part of the condensation, even at fairly high rates of condensation, is completed in the highest sections of surface on which the steam first impinges, the importance of this feature is apparent, and its influence will be seen in the results.

"Surface Efficiency.—Surface efficiency is at the root of all efficiency in a surface-condenser. That condenser is the most efficient in which each square foot of surface transfers in given time and conditions, as to water-supply, etc., from the steam to the water, the largest number of heat-units. This will, moreover, be the condenser which will not only register the highest vacuum, but will maintain it at the least cost in condensing water, and with the smallest surface and cubical capacity per pound of steam condensed. It will also, in given conditions, be the one to yield the highest hot-well temperature. Now, in order that a surface may act thus, it is necessary that the steam should have free access to, and should pass over, sufficient surface on the one side, and that all the condensing water should come into direct and efficient contact with the surface on the other side. This clearly cannot be the case if, on the steam side, practically the whole surface is continually subjected to showers from the water of condensation, or if the steam can short-circuit any material amount of the surface; nor can it be the case on the water side if the condensing

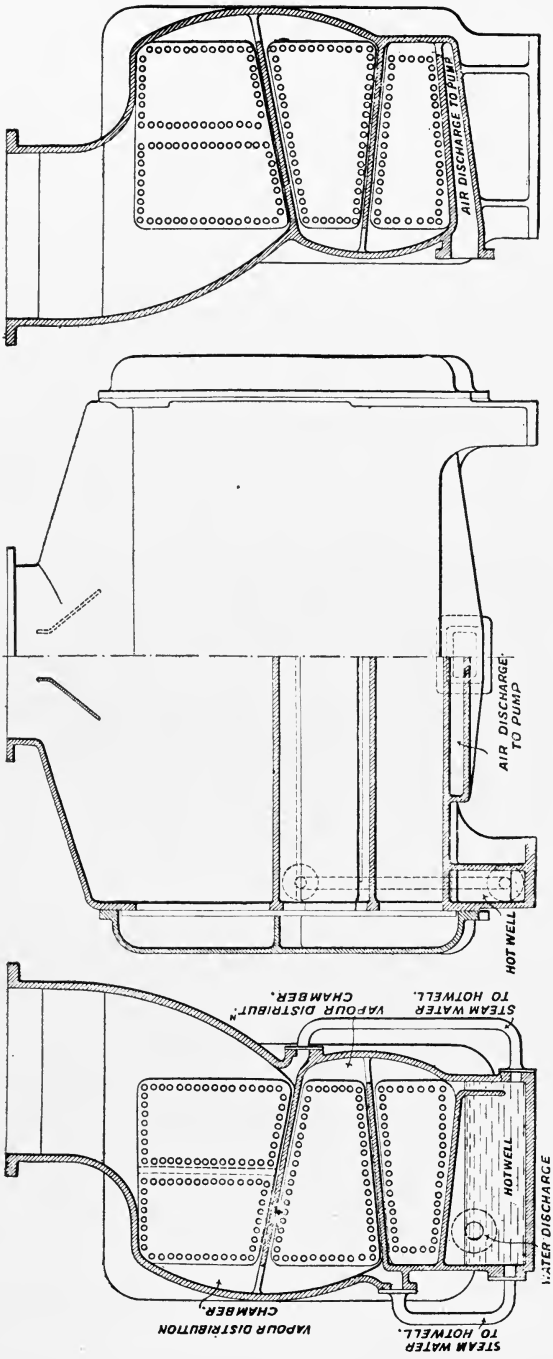

FIGS. 138-139.—Contraflo Condenser.

water flows through the tubes in unbroken cylindrical streams, peripheries of which streams alone come into actual contact with the tube surface, and a greater or less proportion of water-core passes through without efficient contact. Hence the augmented efficiency of the surface as a whole, due to the early interception and removal of the feed-water, the provision for promoting steam circulation, and the adoption of a suitable ratio between the surface and the water-carrying section of each tube element, by the introduction of a solid displacing core in the tubes or otherwise, as shown in Fig. 139*a*. The effect of the use of cores, as against open tubes, on economy in vacuum production will be dealt with later on. The cores used on these trials were triangular laths of hard wood rough from the saw. They were about two inches longer than the tubes, and were simply inserted in the tubes without any fastening whatever. The annexed figure, 139*a*, shows a full-sized section of tube and core in place.

FIG. 139*a*.

"Let t_i = temperature of injection-water;
t_o = " " discharge-water;
t_v = " corresponding to the vacuum V.

"Then the index of relative surface efficiency is the ratio $\frac{t_o}{t_v}$ in relation to t_i, the heat-units absorbed per pound of condensing water being $(t_o - t_i)$. The greater this quantity the less the condensing water required per pound of the steam condensed. Hence economy of condensing water is one very important result of enhanced surface efficiency. Economy of water is important from several points of view. First, as in the case of land installations, water may itself have to be purchased. Second, it has to be pumped through the condenser; and any saving in water means, other things being equal, power economy in vacuum production. Third, water may have to be cooled for repeated use, and in this case surface efficiency of condenser has a double effect. Not only is there less water to be pumped, but owing to its higher outlet temperature there will be a greater mean difference between the temperature of the water to be cooled and the air which cools it; and hence cooling-towers will be more efficient, and may therefore be of smaller size for given power.

"Another important result of enhanced surface efficiency is, of

course, economy of condensing surface. Owing to steam space being dispensed with in this type, a given surface is contained in less capacity of condenser-shell. These two features conduce to economy of weight and capacity. From the point of view, therefore, of weight and space occupied, this type of condenser has important advantages, which would seem to render it peculiarly adapted for use aboard ship, and specially so for all classes of war-vessels, in which both weight and space are of supreme importance. In the case of marine condensers, economy of condensing water is of itself of secondary importance; but economy of pumping power, of weight and space occupied, degree of vacuum maintained, and hot-well temperature are all of great importance.

"The table gives results obtained under similar conditions by two Contraflo condensers and one old-type condenser attached to a quadruple-expansion engine $7'' \times 10\frac{1}{2}'' \times 15\frac{1}{2}'' \times 23''$, stroke $18''$, using steam at about 210 pounds, superheated 50° F.

Condenser.	Surface.	Capacity.	Steam Condensed per Sq. Ft. per Hour.	Vacuum.	Condensing Water per 1 Lb. Steam. Inlet Temp. =50 F.	Surface per H.P., allowing 12 Lbs. Steam per H.P. Hour.	Relative Capacity per H.P. (No. 3=1).
	Sq. Ft.	Cu. Ft.	Lbs.	Ins.		Sq. Ft.	
No. 3.....	62	6	33	28	32	.36	1
" 2.....	100	9.6	20	28	24	.6	1.63
Old type...	170	18	10	28	43	1.2	3.6

"**Thermal Efficiency.**—The higher hot-well temperature and the smaller amount of condensing water and surface are both due, the former entirely and the latter partially, to the same cause, viz., the compartment drainage of the condenser. At all, except very high rates of condensation, or with very small quantities of condensing water per pound of steam, the greater proportion of the condensing work is done by the surface situated in the uppermost compartment. The great mass of the feed-water is therefore withdrawn from the condenser at a temperature sensibly equal to that obtaining in the top compartment of the condenser and without passing over the cooler compartments lower down, and specially escaping the lowest compartment of all, which is thus reserved as an efficient air-cooling section. The hot-well temperatures of the old type are from ten to fifteen degrees lower than those for cor-

responding conditions in the new type for all degrees of vacua exceeding 26 inches.

"The absolute pressure in these condensers is practically uniform throughout the interior; but the temperature is not uniform throughout. It is always higher at the top than at the bottom. The absolute pressure, therefore—the vacuum—must be a compromise between that due to the top and that due to the bottom temperatures. As a matter of fact, in air-tight systems the vacuum recorded is generally somewhat higher than that corresponding to the top temperature, but is not so high as the bottom temperature would indicate, especially at high vacua.

"**Economy in Vacuum Production.**—Conditions are conceivable in which a given vacuum might be too dearly purchased. Leaving out of account for the moment all question of the first cost or weight of the vacuum-producing appliances, including condenser and pumps, as well as any commercial value attached to the condensing water, we have on one side of the account the power expended in maintaining the vacuum and on the other side the power realized from it. Obviously, if a given vacuum should cost more in power for its attainment than it returns in the shape of power due to it in the engines, it would be bad policy to work at such a vacuum. On the above basis, the power cost of a vacuum will comprise the power required to drive the air- and circulating-pumps. The power absorbed by the air-pump will clearly depend upon its size and speed, but so far as degree of vacuum is concerned the power seems practically independent of the vacuum, at least for the Edwards type of pump and for vacua ranging between 26″ and 29″. If there is any effect at all, it is so small, in a comparative sense, as to be negligible in practice. (For proof, see page 270.)

"As regards the power absorbed by the circulating-pump, this will, of course, depend upon several factors, according to the circumstances of each individual case; but so far as the essential circumstance is concerned, viz., the production of different degrees of vacua in a given condenser—the power will depend on two factors only—the quantity of condensing water and the head or pressure against which it is propelled through the condenser.

"The speed of the circulating water in the tubes varied from $1\frac{1}{4}'$ to $4\frac{1}{2}'$ per second with no cores, and from $1\frac{3}{4}'$ to $6\frac{1}{2}'$ with cores,

the corresponding maximum resistances being those due to heads of 10′ and 32′ respectively."

Surface-section Ratio.—If L is the length of one tube and the water circulates 4 times, the length of one element $=4L$. Calling s the exterior surface of one element and a the cross-sectional area of one tube, then the surface-section ratio $=\left(\frac{s}{a}\right)$. The numerator of this ratio indicates proportional heat-absorbing capacity, and the denominator proportional condensing water-carrying capacity; and it might therefore be expected to have a determining influence upon the efficiency of condensers on the water side. In this type of condenser surface efficiency is independent of rate of condensation—up to 37 lbs. per sq. ft. per hour—but it is materially dependent upon the value of the surface-section ratio.

The sole advantage of cores in these trials consisted in the fact that they afforded a ready means of changing the surface section without the necessity of structural alterations in the condenser. In new designs the same end can, of course, be attained by the adoption initially of suitable proportions and without cores.

Maximum efficiency will occur when discharge-water temperature is equal to the temperature at the condenser top. This is practically attained when the surface section has a value of something like 2900 or 3000." *

Cooling-towers.—In many places water is either unobtainable in large quantities, expensive, or, if abundant, contains elements such as mud, salts, or acids that are objectionable. Some appliance that will reduce the amount of water necessary to operate condensers is desirable. Evidently if the cooling-water could be cooled and used repeatedly, a very great saving would be effected.

Fig. 140 represents the Alberger cooling-tower for this purpose. It consists of a thin cylindrical steel shell, open at the top and supported on a suitable foundation, and having fitted on one side a fan, the function of which is to circulate a current of air through the tower and its filling. This filling consists of layers of cylindrical 6-inch tiles 2 feet long, breaking joints. The hot water passes up through a central pipe to four perforated arms that are made to revolve by the discharge reaction. The water is thus sprayed over the tiles, down which it runs in thin layers, exposing an enor-

* London Engineering.

mous surface to the air rising from the fan. The area of floor-space occupied varies from 1 to 2 square feet per hundred pounds of steam used by the engine.

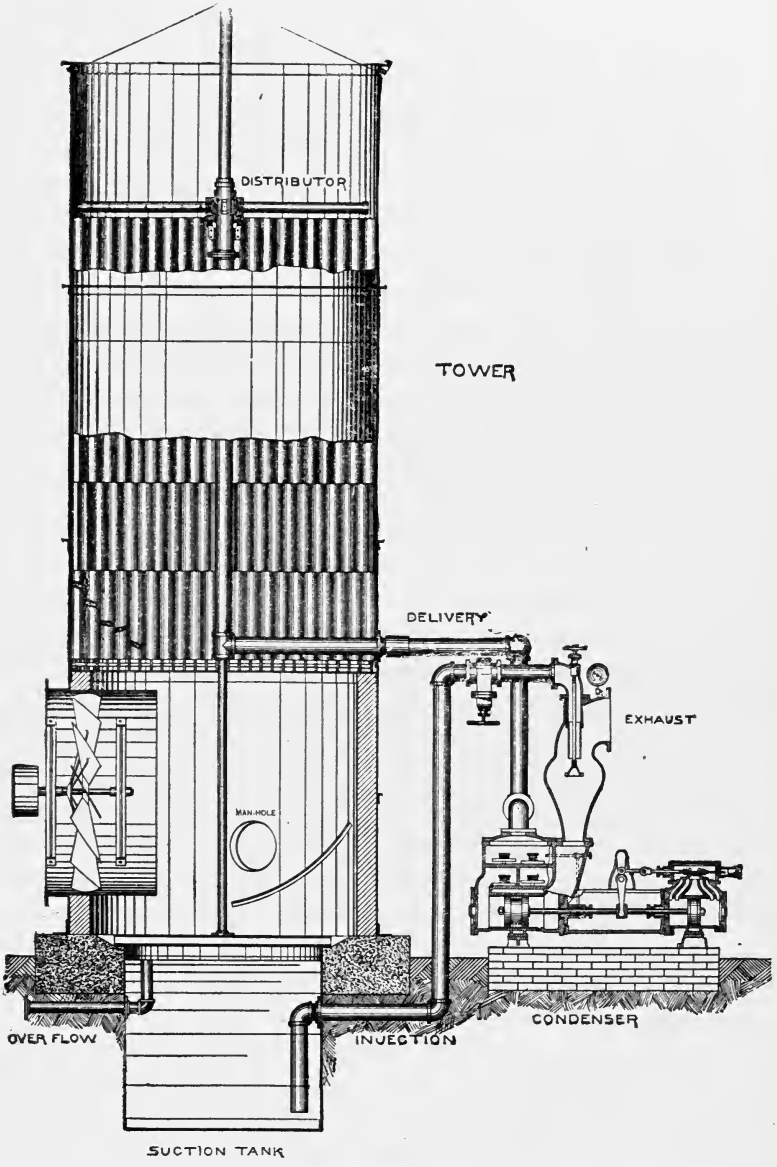

FIG. 140.

The fans must be large and run at low speed. The speed of the fans must vary with the temperature and humidity of the atmos-

phere, and a direct engine-drive proves economical. The water lost per hour by evaporation in the tower = .8 of the feed-water used per hour. Hence the total water required by a condensing-plant with a tower is .8 of the feed-water instead of 30 to 50 times the feed-water. The power to run the fans varies from 2% to less than 1% of that of the main engine.

The following data show the effect of changes in the season:

Temperature of atmosphere.	30° F.	36° F.	78° F.	96° F.	85° F.	59° F.
" condenser discharge to cooling-tower...	110°	110°	120°	130°	118°	129°
Temperature of injection returned from tower.....	65°	84°	84°	93°	88°	92°
Degrees of heat extracted by tower.....	45°	26°	36°	37°	30°	37°
Speed of fans at tower R.P.M.....	36	0	145	162	150	148
Vacuum at condenser, inches	25½	26	25	24½	25½	25
Strokes of air-pump.....	30	30	37	44	43	28
Boiler-pressure.....	110	110	120	120	120	112
Temp. boiler-feed.....	212°	212°	210°	211°	213°	213°

The gain by condensing is shown in the following table: *

Type of Engine.	Feed-water per I.H.P. per Hour.				Per Cent Gained by Condensing.
	Non-condensing.		Condensing.		
	Probable Limits.	Assumed for Comparison.	Probable Limits.	Assumed for Comparison.	
	Lbs.	Lbs.	Lbs.	Lbs.	
Simple high-speed.....	35 to 26	33	25 to 19	22	33
" low- "	32 " 24	29	24 " 18	20	31
Compound high-speed....	30 " 22	26	24 " 16	20	23
" low- "	.....	24	20 " 12¾	18	25
Triple high-speed.....	27 to 21	24	23 " 14	17	29
" low- "	.....	.....	18 " 12		

Correct Absolute Condenser Pressure.—The vacuum on a condensing-engine is usually expressed in inches of mercury, whether a mercury column or the ordinary Bourdon gage is used. The latter is seldom correct enough for accurate work and thermometers properly placed give more accurate results. If the

* See A. S. M. E., Vol. XVII.

mercury column is used, care must be taken in interpreting its reading. If the barometer reads 29.6 and the corrected mercury column reads 27.5, the absolute pressure in the condenser is 2.1 inches, or $14.7\frac{2.1}{29.92} = .491 \times 2.1 = 1.032$ pounds per sq. in., corresponding to 102°.5 F. If, however, the barometer stood at 30.5 the pressure would then have been $.491 \times (30.5 - 27.5) = 1.473$ pounds per sq. in., corresponding to 114°.5 F. This would make a serious difference, for example, in the adiabatic expansion of steam in a steam-turbine.

Wet Vacuum-pump Design.—Let us state a few laws that are demonstrated in books on physics:

1. The temperature of ebullition, or the boiling-point, increases with the pressure.
2. For a given pressure ebullition begins at a certain temperature, which varies in different liquids, but which, for equal pressures, is always the same in the same liquid.
3. Whatever the source of heat as soon as ebullition begins, the temperature of the liquid remains stationary.
4. The tension and consequently the quantity of vapor which saturates a given space are the same for the same temperature whether this space contains a gas or is a vacuum.
5. The tension of the mixture of a gas and a vapor is equal to the sum of the tensions which each would possess if it occupied the same space alone.

In engineering problems none of these laws is absolutely true because the requirements of the law are not fulfilled. The conditions existing in the vapor-space of a jet condenser are very complex. The injection- and feed-waters bring into the condenser from 5% to 7% of their volume of air when reckoned at atmospheric pressure and temperature. The volume that this air will occupy in the condenser depends upon *its* tension or pressure in the condenser, and not on the total pressure in the condenser as shown by a vacuum-gage. The latter, as shown by law 5, indicates the sum of the pressures due to the steam tension and the vapor tension.

The five laws given above, governing a vapor and its liquid,

when there is temperature equilibrium in both vapor and liquid (which occurs in experiments when vapor and liquid are quiescent), must not be applied too rigidly to masses moving with cyclonic velocity. The temperatures of the vapor and its liquid are not the same, and the temperature of both differs throughout their mass in engine-condensers.*

For our purposes it is close enough to take the mean temperature of the vapor and liquid and find the corresponding pressure. This is approximately the pressure due to the steam, and the difference between this quantity and the pressure as calculated from the vacuum-gage reading is the pressure due to the incondensible gases, such as air, carbonic acid, etc. If the mean temperature of the water and steam were 126° F., we know that the pressure due to the steam vapor is 2 pounds per sq. in. If the vacuum-gage shows 24″, the barometer reading being 30″, the total pressure in the condenser would be 2.94 pounds, and the pressure due to the air alone would be .94 pound per sq. in.

The importance of distinguishing between the air- and steam-pressures will become apparent if we attempt to obtain high degrees of vacua in any system of jet condensation where the air is allowed to separate from the water.

Air-pump.—† "It is sometimes thought that a large air-pump is a very inefficient machine for handling comparatively small amounts of air, and the reason given is that the piston of the pump is drawing against the vacuum all the time, and there is 14 pounds pressure on every square inch of the piston to be overcome by the motor. This idea is wrong, however. The work on the pump is nearly proportional to the amount of air handled regardless of the size of the pump. If the amount of air is less than the pump is capable of delivering, the pressure on the atmospheric side of the piston itself is balanced, or nearly so, for a good portion of the cycle. This can be demonstrated mathematically, and has been demonstrated by actual measurements on these air-pumps. The maximum load on the pump occurs when the vacuum is about 18½″, varying with the clearance. If the vacuum is less than that,

* Expts. Surface Condensation. J. H. Smith, Engineering, March 23, 1906.
† Engineering Mag., April, 1906.

the load falls off because of the decreased difference in pressure. If the vacuum is greater, the load falls off from the decrease in the mass of air handled. The curve on page 271 (Fig. 142) is a record of

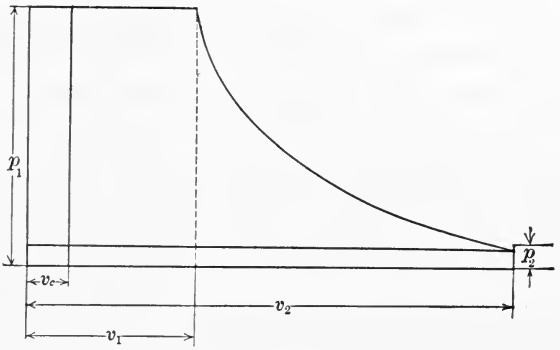

FIG. 141.

a trial made on a pump to demonstrate this, and the analytic demonstration is also given. The record of the trial of the pump does not present a perfect and uniform curve, because the pump-valves are mechanically operated, and for the low vacuum they can be adjusted only by the sound which the mechanism gives out; but the curve in general is correct and demonstrates the point. The readings were taken down to $18\frac{1}{2}''$ of vacuum. Below that point only one reading was to be had, i.e., that at 0 inches.

Analytical Proof. (Fig. 141.)

$$A = \text{area of card} = p_1 v_1 + \int_{v_1}^{v_2} p dv - (p_1 v_c + p_2 v_2 - p_2 v_c)$$

$$= p_1 v_1 + p_1 v_1 \log_\epsilon v_2 - p_1 v_1 \log_\epsilon v_1 - p_1 v_c - p_1 v_1 + \frac{p_1 v_1 v_c}{v_2};$$

$$\frac{dA}{dv_1} = 0 = p_1 + p_1 \log_\epsilon v_2 - \frac{p_1 v_1}{v_1} - p_1 \log_\epsilon v_1 - p_1 + \frac{p_1 v_c}{v_2}.$$

$$\text{The area} = \text{a maximum when } \log_\epsilon v_1 = \log_\epsilon v_2 - 1 + \frac{v_c}{v_2}.$$

Let $p_1 = 14.7$, $v_2 = 1$, $v_c = .03$, $\log_\epsilon v_1 = 0 - 1 + .03 = -.97$. (Add 2.3025 and we obtain $2.3025 - .97 = 1.3325$, or the logarithm of ten times the required number, $\therefore V_1 = .379$.) Hence the area is a maximum when $V_1 = .379$. The corresponding value of

p_2 from $p_1v_1 = p_2v_2$ is 5.6 pounds, or a vacuum of $14.7 - 5.6 = 9.1 \times 2 = 18''$.

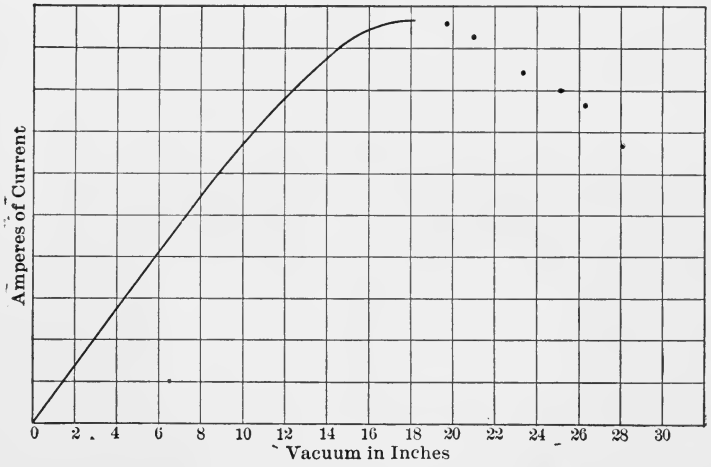

FIG. 142.

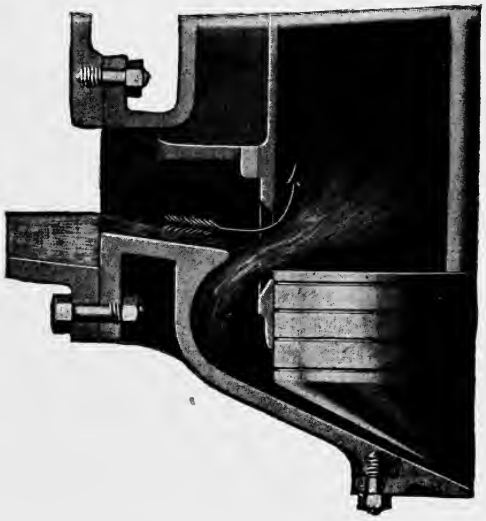

FIG. 143.

"Edwards' Air-pump.—The condensed steam flows continuously by gravity from the condenser into the base of the pump

and is there dealt with mechanically by the conical bucket working in connection with a base of similar shape. Upon the descent of the bucket the water is projected silently and without shock at a high velocity through the ports into the working barrel.

"However slowly an air-pump with foot- and bucket-valves may be running, the pressure in the condenser has to be sufficiently above that in the pump to lift the foot-valves, overcome the inertia

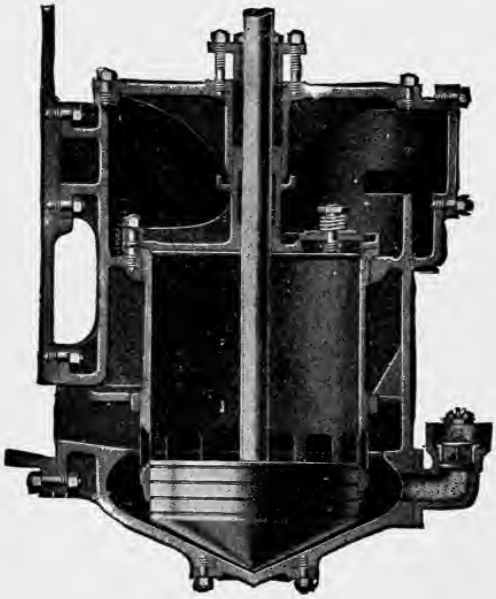

FIG. 144.

of the water, and drive the water up through the valves into the barrel. The higher the speed of the old type of pump the greater is the pressure required to overcome these resistances owing to the very short space of time available, and as any increase of pressure in the condenser is accompanied by a corresponding increase of back pressure in the L.P. cylinder, it will be seen that in an air-pump fitted with foot- and bucket-valves, increase of speed means loss of efficiency.

"Under ordinary working conditions, when the bucket descends and the ports are open, there is absolutely no obstruction between the condenser and the pump; the air has a perfectly free entrance into the barrel (Fig. 142), while immediately afterwards the water

is injected into the barrel at a high velocity. Thus, instead of obstructing the entrance of the air, the water tends to compress that already in the barrel and to entrain or carry in more air with it.

"In the old type of pump the clearance between the bucket and head valve-seat is necessarily large, due to the space occupied by the bucket-valves, the ribs on the under side of the valve-seating, etc. Before an air-pump can discharge, all the air in the working barrel above the bucket must be compressed to a pressure slightly in excess of the atmosphere. Immediately the bucket descends, the air-bubbles remaining in the clearance water expand and occupy a space in the pump which should be available for a fresh supply of air from the condenser. In this type of pump the top clearance is reduced to a minimum."

To obtain high vacua we should utilize one or more of the following:

1. Cold injection-water.
2. Have low discharge-water temperature.
3. Control the amount of injection-water.
4. Increase the speed of the air-pump.
5. Reduce the back pressure on the air-pump.
6. Prevent the separation of air and discharge-water and sweep both out together by gravity.
7. Use an air-pump that does not require suction-valves.
8. Have the minimum possible clearance in the air-pump and fill that clearance with cool water.
9. Cool the gases to the temperature of the injection-water.
10. Use a dry-air pump.
11. Use a surface-condenser, pump all air out of the system, and absolutely prevent air-leakage.

Air-pump for Surface-condensers.—At first sight it would seem that air-pumps used with marine engines could be of very moderate size, as the same feed-water is used continuously, and after it has circulated a few times it ought to be freed from all of its contained air. And yet on large transatlantic steamers we find an air-pump capacity of .23 cubic foot per pound of steam condensed, the vacuum ranging from 26 to 27 inches. When dealing

with high vacua, as required in steam-turbine work, much higher pump capacity is required.

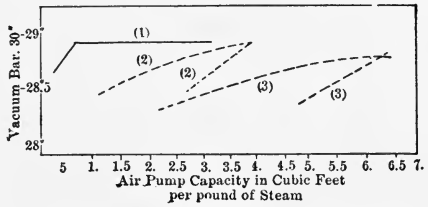

FIG. 145.

Professor Weighton, in experiments illustrated in Fig. 145, found—

1. That when the system is fairly air-tight .7 cu. ft. per pound of steam condensed is as good as anything larger.

2. When air-leakage exceeds a certain amount, larger pump capacities are required. This ranged from .7 cu. ft. per pound of steam, condensed when the engine was running under full power and air-leakage was consequently slight, up to 6.5 cu. ft. at one-quarter power when the receiver pressures were below atmospheric pressure.

3. That there is no apparent advantage in working pumps on the compound principle.

Dimensions.—When air-pumps are directly connected to the engine so that they make the same number of strokes, the following dimensions have been used:

For jet-condensing engines having vertical, single-acting air-pumps the area of the air-pump piston or bucket multiplied by its stroke may be from 1/5 to 1/10 the capacity of the L.P. cylinder; if the pump were horizontal and double-acting its capacity may be from 1/8 to 1/16 of the L.P. cylinder.

For surface condensing engines the single-acting air-pump capacity may be 1/10 to 1/18 of that of the L.P. cylinder, and the capacity of the double-acting pump would be 1/15 to 1/25 of the volume of that cylinder.

On torpedo-boats with main engines making 330 revolutions per minute the ratio of directly connected air-pump volume swept through per revolution is from 1/36 to 1/30 of that swept through

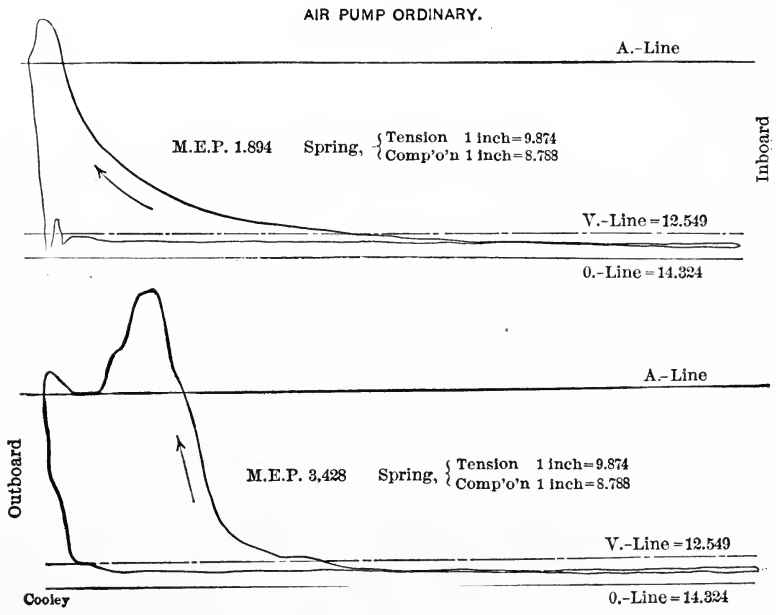

FIG. 146.

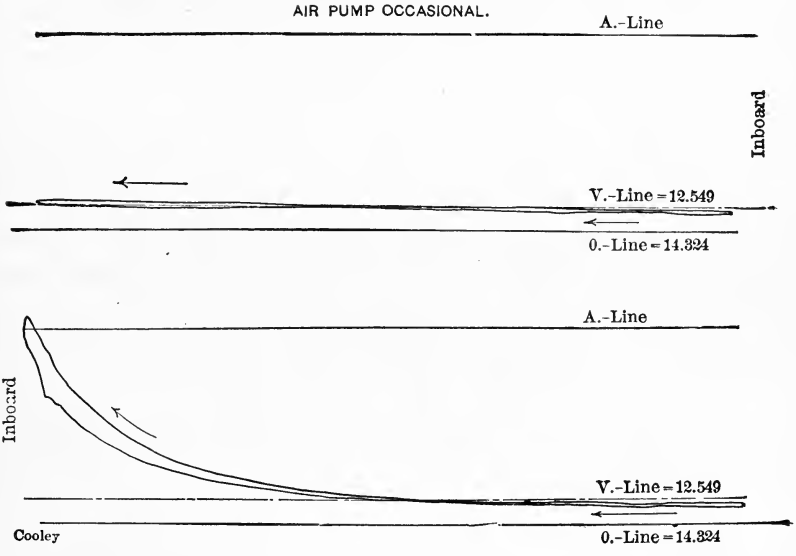

FIG. 147.

per revolution by the low-pressure pistons. On the battle-ships the corresponding ratio of independent air-pump piston displacement per revolution to the displacement of the low-pressure pistons per revolution was 1/25, but the pumps only made 1/4 to 1/5 the number of revolutions made by the main engines.

Bauer gives	I.H.P.	L.P.Cylinder / Air-pump	
		Directly Connected.	Independent.
Small cargo boat	700	21.1	
Medium cargo-boat	2,000	15.5	
Large cargo-boat	4,200	18.5	
Mail steamer	9,000	....	17
Deutschland	33,000	....	17.6
Kaiser Wilhelm II	40,000	....	19.5
Russian cruiser *Bogatyr*	20,000	....	17
Navy gunboat	1,300	19.6	
Small cruiser	10,000	41.2	
Large cruiser	19,000	....	8.2
Battleship	16,000	....	11.4

Definitions of Air-pumps.—If we refer to Fig. 16 we see that this pump draws from the condenser the condensed steam and a mixture of air and vapor. The injection water, however, is forced by the circulating pump through the tubes and out of the condenser without coming into contact with the condensed steam. If we examine Fig. 17 we see that that air-pump has to handle a mixture of injection water and condensed steam as well as the mixed air and vapor. Air-pumps which must handle both water and a mixture of air and vapor are called *wet vacuum-pumps*. On the other hand, a vacuum-pump attached to the barometric type of condenser, Figs. 125 and 126, would draw off only the mixture of air and vapor as the mixture of condensed steam and injection water flows off by gravity at the bottom of the discharge pipe. An air-pump working in this manner is called a *dry-air pump*. The ejector type of condenser needs no air-pump.

Action of an Air-pump.—Comparing the air-pumps in Figs. 16 and 144 we notice that one is horizontal, with large clearance spaces and with inlet valves, *S*, which must be lifted. The other pump is vertical, with no clearance spaces and with no inlet

valves. On the suction stroke the difference between the absolute pressure in the pump cylinder and that in the condenser is the force which moves the water and mixture of air and vapor. That this difference may be as small as possible so that the condenser pressure will be a minimum it is evident that anything causing resistance to movement, such as valves, narrow passages or sharp bends, should be removed. That the pressure in the pump should be as low as possible there should be no pockets in which air is compressed on one stroke only to re-expand on the following one.

To understand the action of the air-pump the student should have a clear idea of the sequence of events as they occur in the pump during a revolution. At the beginning of the compression stroke of the air-pump piston (see Figs. 16, 144, and 146), the air-pump chamber contains more or less water and some air and water vapor at the same temperature as the water and at a certain pressure absolute.

Returning to Figs. 16, 144, and 146, we note that in the early part of the compression stroke that the curve of pressure rises very slowly. This is due to the fact that the water vapor *cannot be compressed* as the vapor is converted into water. Hence the air alone is compressed. After all the water vapor is condensed, the curve of air pressures rises very rapidly to something over the pressure due to the atmospheric and valve resistances. On the return stroke, the pressure drops very rapidly if only water is present, but, if any air is present (at full atmospheric pressure) the curve drops rather slowly. (Fig. 147.)

Designing Air-pumps.—The design of an air-pump consists in finding the volume which the air-pump piston must sweep through per minute to remove all the air and water intended from the condenser. This amount will vary greatly. For example:

1. If the condenser is thirty or more feet from the ground, it may be made self-draining. A surface condenser of that sort would use a dry air-pump whose volume would depend principally on the amount of air leakage and the degree of vacuum required.

2. A barometric condenser has a dry-air pump but it must remove not only the air from the condensed steam but also the air from the injection water and the air leakage.

3. The wet vacuum-pump attached to a surface condenser removes the condensed steam and the air that leaks in.

4. The wet vacuum-pump attached to the ordinary jet condenser has to remove the discharge water, the condensed steam and the air which the feed- and injection-water contained.

Design of Air-pump for Surface Condenser.—Assume the following data: Compound engine, 300 I.H.P.; 15 pounds of water per I.H.P.; injection, 70° F.; discharge, 90° F.; feed, 110° F.; vacuum, 26 inches; barometer, 29.90 inches.

The unit of volume generally used is the volume of one pound of feed-water. Let us assume that feed and injection water contain 1/20 or .05% of their volume of entrained air at atmospheric temperature and pressure. As soon as the water containing this air gets into the condenser the air increases in volume in proportion to the decrease in pressure and to the increase of absolute temperature according to the law, $\frac{PV}{T}=C$.

As the vacuum gage is affected by the atmospheric pressure we see that the absolute pressure in the condenser is $29.90-26=3.90$ inches. As the temperature of the water vapor is 110° F. we see from the tables that the pressure due to it is 2.58 inches or 1.29 pounds absolute. Then, from Dalton's law, we know that the difference, or $3.90-2.58=1.32$ inches, is the pressure due to the air.

NOTE.—If over a little water at 110° F. we had a cubic foot of space filled with water vapor alone at 2.58 inches pressure absolute, we could take a cubic foot of air at 1.32 inches pressure and 110° F. and force it into the cubic foot of vapor. At the end of the operation there would be only *one* cubic foot of the mixture of vapor and air but the pressure would be the sum of the former pressures. The volume occupied by a certain weight of *air* in the condenser is determined by the absolute temperature of the air and the *air* pressure and not by the condenser pressure. If the vapor in a condenser were at 126° F., it would be impossible to obtain a vacuum over 26 inches, or if the temperature of the vapor were 141° F. it would be impossible to secure a greater vacuum than 24 inches, no matter what the volumetric displace-

ment of the air pump might be. Hence to obtain a high vacuum it is necessary to have the air and vapor as cool as possible.

If V_1 = the volume of the feed-water in cubic feet per minute, then $.05V_1$ is the volume of its entrained air at 29.90 inches of pressure and $460+70=530°$ F. A. From the equation,

$$\frac{P_1V_1}{T_1}=\frac{P_2V_2}{T_2},$$

we can find its volume at 1.32 inches of pressure and at $460°+110°=570°$ F. A. Hence,

$$\frac{29.90\times.05V_1}{460+70}=\frac{1.32V_2}{460+110} \quad \text{or} \quad V_2=1.2V_1.$$

The theoretical volume of the air-pump would thus be $V_1+1.2V_1=2.2V_1$. As the volume of the feed-water is generally taken as the unit, we may say then that the volumetric displacement of the air-pump in cubic feet per minute is, in this case, 2.2 times the volume of the feed-water in cubic feet. The above makes no allowance for air leakage or pump efficiency. On the other hand, the factor 2.2 is too large if the condensed steam is sent to the boiler continuously since such feed-water will not contain .05% entrained air. Neither is it true if new feed-water is used continuously if this feed-water is sent through an open heater and brought to the boiling-point approximately. The entrained air would be then only $\frac{460°+70°}{460°+210°}=\frac{53}{67}=.8$, as much as it was in water at 70° F.

Manufacturers of condensing apparatus are in the habit of calling for piping free from air leaks and then supplying air-pumps that are entirely too large if there are no air leaks. In the present case a reliable index of the amount of leakage expected is obtained from the size of air-pumps supplied. Manufacturers of vertical twin air-pumps will guarantee 26 inches of vacuum with injection at 70° F. with an air-pump displacement of 13 times the volume of the feed-water. This allows practically ten or eleven volumes, at condenser pressure and temperature, for air leakage and pump inefficiency. Horizontal pumps are

furnished with a displacement of 20 times the volume of the feed-water, thus allowing 18 volumes for leakage and inefficiency.

A 300 horse-power engine would use

$$\frac{300\times15}{62.5\times60}=1.2 \text{ cu. ft. of water per minute.}$$

The theoretical displacement of the required air-pump would be 2.2 times and the practical displacement would be 13 or 20 times 1.2 cu. ft. per minute, according as the air-pump is vertical or horizontal.

Bauer states that the principal dimensions of single-acting air-pumps are determined from the equation

$$f\times s=C\frac{\text{I.H.P}}{n}.$$

Here f = sectional area of air-pump in square inches;
s = stroke of pump piston in inches;
I.H.P. = indicated horse-power of the main engine;
C = constant, equal to volume delivered by the air-pump per I.H.P. per minute.
n = number of effective strokes of air-pump piston.

The coefficient $C=86$ to 111 in surface condensers of triple or quadruple engines, with separately-driven engines.

$C=185$ to 245 in surface condensers of triple- or quadruple-expansion engines, the air-pumps being driven by the main engine.

$C=300$ to 365 in surface condensers of compound engines, the air-pump being driven by the main engine.

If jet condensation is used as well as surface condensing, or if the former alone is used, $C=610$ to 730. If instead of one air-pump, two pumps are fixed to and driven by the main engine, the volume swept through per stroke in each may be about .6 of that above. The piston speed varies from 200 to 350 feet per minute in cargo boats and from 300 to 500 feet per minute in warships.

The student may discuss the following data of the Glasgow Electric Power Station (*Power*, 1905): Steam handled, 60,000 pounds per hour; vacuum, 25 inches in the condenser and 23 inches in the engine; injection, 78° F.; discharge, 94° F.; con-

densers, 7000 square feet; cooling surface (2690 tubes), 1 inch diameter; Edwards' three-throw electrically-driven air-pumps; diameter of cylinder, 16 inches; stroke, 12 inches; revolutions, 150.

Wet Vacuum-pump for Jet Condenser.—Assume the following data: Compound engine, 300 I.H.P; water rate, 15 pounds per I.H.P.; injection, 70° F.; discharge, 110° F.; vacuum, 26 inches; barometer, 29.90 inches.

As the amount of heat per pound of steam to be absorbed in the condenser is practically constant and is about 1050 B.T.U., we can assume that the amount of injection water required is $1050 \div (110-70) = 26$ pounds. The total water is then 27 pounds and the volume of air is

$$\frac{29.9 \times .05 V_1}{460+70} = \frac{(29.90-26-2.58)V_2}{460+110}.$$

Hence V_2 is equal to $1.2V_1$. As V_1 is 27 times the volume of the feed-water then the volume of the entrained air is 27×1.2 or 32.4 times the volume of the feed-water. The amount to be allowed for air leakage is largely guess work. If we allow 10 times the volume of the feed-water we shall have the following allowances:

Volumes:	1	....Feed-water
	26	....Injection water
	32.4	....Air in feed and injection water
	10	....Air leakage at condenser pressure and temp.
	69.4	

Hence the displacement of the air-pump in cubic feet per minute will be 70 times the volume of the feed-water. The required displacement is therefore

$$\frac{300 \times 15 \times 70}{62.5 \times 60} = 84 \text{ cubic feet.}$$

The required air-pump may now be chosen from a catalogue.

Cooling Air in Condensers.—To cool the air in its passage to the air-pump a large cooling surface is necessary, as the heat transmission coefficient is very low. Efficiency depends upon the air velocity, the water velocity in the pipes being of little importance. In Josse's experiments (*Power*, Feb., 1909) it varied from 0.172 to 0.955 B.T.U. per square foot per hour per degree Fahrenheit difference of temperature.

Dry Air-pumps for Counter-current Barometric Condensers.—If Fig. 125 is carefully examined it will be seen that the air is drawn off at the top of the condenser. To reach the eduction pipe the air has to pass in intimate contact with "cold fingers" containing injection water at initial temperature. The tendency of these cold fingers is to deprive the air of its last remnant of vapor and to cool the air down to (theoretically) the injection temperature. If the vapor is condensed, there is a marked tendency for the vapor pressure to decrease and the air pressure to increase as the total pressure must be very nearly uniform through the condenser. It is evident that the lowest total pressure must be at the mouth of the air-eduction pipe, as the gases are flowing in that direction and all flow is from the greater to the less pressure. But in gases so light as these, a very high velocity is secured by a very slight difference in pressure. At condenser pressures air is lighter than steam, but practically the velocities in the condenser are so great that it is easy to see that ideal conditions cannot be carried out. Hence in the design of an air-pump for this style of condenser the volume of the pump displacement is materially reduced, as it does not care for the feed and discharge water and receives the air not only at much higher pressure but also colder.

Design a dry-air pump for a 300 I.H.P. compound engine, using 13 pounds of water per I.H.P. The injection is at 70° F.; the discharge at 110° F.; vacuum is 28.5 inches; barometer, 29.90. Counter-current condenser.

We shall assume that the air is drawn off at 85° F. (the corresponding pressure is 1.2 inches of mercury) and that the air leakage at condenser pressure is 15 times the volume of the feed-water.

The pressure corresponding to 110° F. is 2.58 inches of mer-

cury and, if the steam vapor were not brought below that temperature, no vacuum pump however large would give the required vacuum. The difference, $29.90-28.5=1.4$ inches, is the maximum possible pressure of the air and could only occur if all the vapor is condensed. The air may be lower than 85° F., the minimum 70° F. being possible. Assume then 1.2 inches as the absolute pressure of the air.

Assuming each pound of steam going into the condenser loses 1050 B.T.U the amount of injection per pound of steam will be

$$\frac{1050}{110-70}=26 \text{ pounds.}$$

For each *cubic foot* of feed-water there will be $26+1=27$ cubic feet of discharge water. The volume, V_2, of the air in this injection and feed-water (assuming both to have been originally at 70° F. and 29.90 inches pressure) after reaching the condenser and passing the cold fingers of the injection-pipe will be, since

$$\frac{29.90\times.05V_1}{460+70}=\frac{1.2V_2}{460+85},$$

$1.3V_1$, where V_1 represents the volume of the discharge in any unit of time.

The number of cubic feet of feed-water per minute will be

$$\frac{300\times13}{60\times62.5}=1.1.$$

The volume of the discharge, per minute, will be

$$27\times1.1=29.7 \text{ cubic feet.}$$

The volume of air to be discharged per minute will be

$$29.7\times1.3=38.6 \text{ cubic feet.}$$

If the air leakage is 15 cubic feet per minute the total displacement of the dry-air pump, per minute, will be

$$38.6+15=53.6 \text{ cubic feet.}$$

Ex. 101. Design a surface condenser for a 100 horse-power high-speed engine using 18 pounds of steam per I.H.P. Assume other conditions. Vacuum 27″.

Ex. 102. Design a contraflo condenser for a 2000-horse-power engine using 13.5 pounds of steam per horse-power. Vacuum expected = 28″.

Ex. 103*a*. Design a wet vacuum-pump for the jet condensers; 26.5 inches of vacuum required.

Ex. 103*b*. Design a dry vacuum-pump for the surface condensers.

CHAPTER X.

SMALL AUXILIARIES.

Steam-pumps (Fig. 4).—The wastefulness of the ordinary steam-pump is not recognized by the ordinary steam user. It uses steam at full boiler-pressure; the clearance is inordinate when the piston makes a full stroke and there is no adjective strong enough to express its wastefulness in case it does not make its full stroke. The initial condensation depends upon range of temperature which, in the case of a steam-pump, is from the boiler temperature to 212° F. As a result, the initial condensation is very great. In case the pump is used only occasionally and the steam-pipe fills with water from radiation losses, the percentage loss for the actual work done is very great. The ordinary steam-pump will use between 80 and 300 pounds of water per I.H.P. A simple pump will require one pound weight of steam to pump 40 pounds of water during the time actually employed in pumping.

This waste may be reduced by compounding, and a still greater saving will be made by the use of a compound condensing pump. For instance, a duplex $6'' \times 4'' \times 6''$ may be replaced by a single compound with high- and low-pressure steam-cylinders of 6 inches and 10 inches diameter, water cylinder 5 inches in diameter and 10-inch stroke.

The greatest saving can be made by using the exhaust-steam in a feed-water reheater. Great care should be used not to increase the back pressure unduly.

Wasteful as they are, however, they are far more economical than ejectors when the heat in the water ejected is thrown away, as in the case of (bilge) syphons.

To economize, auxiliaries have been belt-driven from a shaft

which was driven from the main engine. This arrangement has a number of difficulties to overcome:

1. The need of regulating each pump to an exact speed depending upon requirements. In an emergency an excessive speed of one pump may be needed for a few moments, or for long intervals no speed at all may be needed.

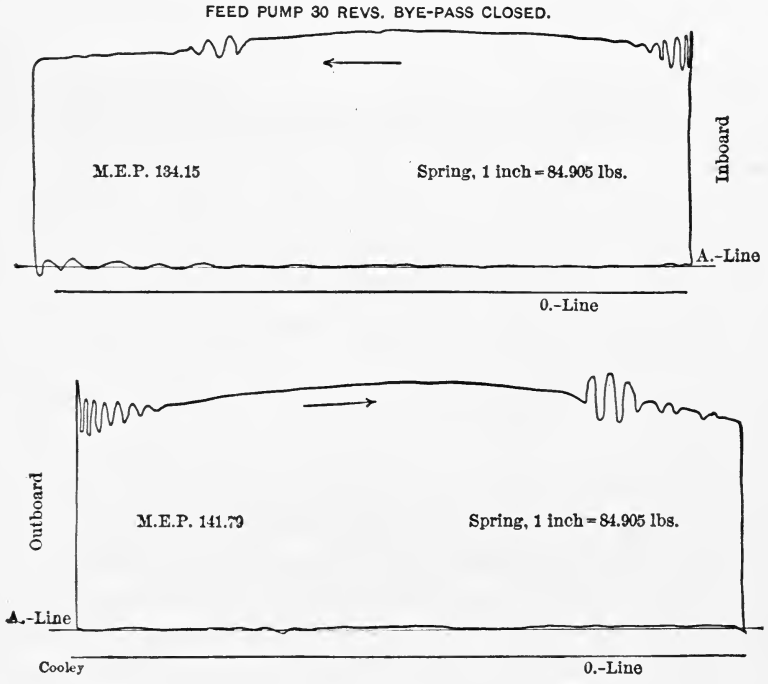

FIG. 148.

2. The friction of heavy shafting is a large part of the power required, hence the arrangement is wasteful if only a few auxiliaries are running.

If the steam from the main engine is sent to a condenser, this arrangement is less economical in heat and less convenient than separate auxiliaries if the latter send their exhaust-steam to feed-water heaters.

There is a practical limit to the amount of exhaust-steam that can be used in this way. Moreover, the use of any heater is not economical unless it is using heat that would otherwise be neces-

sarily wasted. As in many other things, heating economies are possible in a large plant that are not practically possible in a small one. Similarly plants that are run for short intervals only cannot use apparatus on which the interest and depreciation charges would counterbalance the economy gained by their use for a short

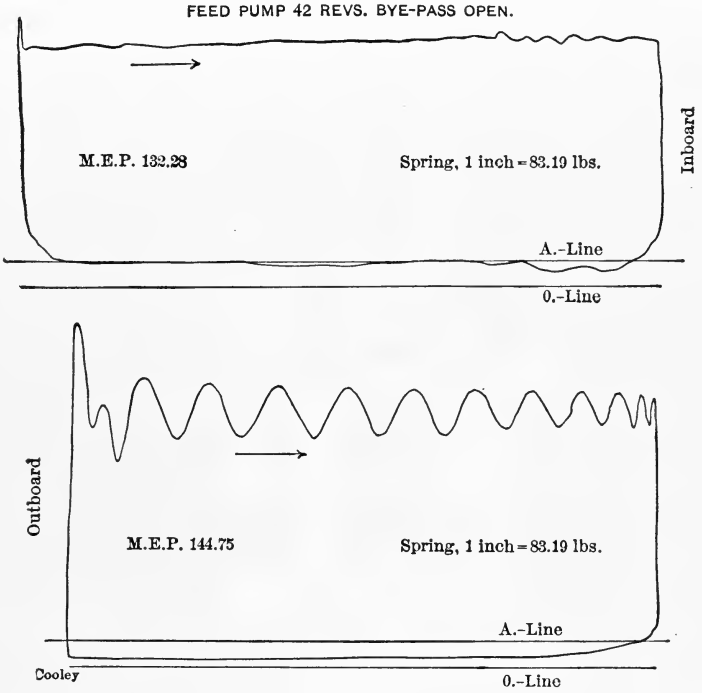

FIG. 149.

period of time. Hence with a uniform load and good feed-water an economizer may pay for itself.

The amount of feed-water required per horse-power varies from—

40 to 25 pounds for simple engines,
25 to 15 pounds for compounds,
20 to 11 pounds for triples.

Each pump should be designed to supply 1.5 to 2 times the theoretical quantity of water required. This allows for slip or imperfect filling of the pump with water.

The velocity of the water in the suction-pipe should not exceed, normally, 450 feet per minute, that in the discharge-pipe being 600 feet per minute. The net area of the valve passageway should be calculated at 400 feet per minute. The diameter of the steam-cylinder is 1.4 to 1.6 times that of the water-cylinder, thus affording a pressure of 2 to 2.5 times that of the boiler.

In duplex pumps the steam-valve on one cylinder is driven by the reciprocating motion of the other pump. In the simplex pumps it is necessary to employ an independent valve.

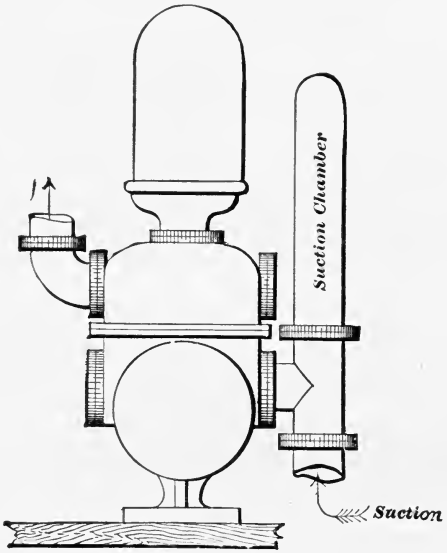

FIG. 150.

Reciprocating Circulating Pumps (Fig. 18).—The piston speed of these pumps may reach 475 feet a minute; their volume may be obtained by allowing—

9 to 10.5 cubic feet per hour per H.P. for compound engines;
7 to 9 cubic feet per hour per H.P. for triple- or quadruple-expansion engines.

This allows 80% efficiency for the pump.

The number of strokes per minute made by a steam-pump is generally calculated on the basis of 100 feet of piston speed per minute. For continuous boiler feeding and running under heavy

pressure the speed should not exceed 50 feet per minute. The delivery is also frequently given in gallons. If the diameter of the water-cylinder is squared and then multiplied by 4, the result is the delivery of the pump in gallons per minute on the basis of 100 feet of piston velocity.

On most pumps it is deemed advisable to place an air-chamber on the delivery side of the pump. In most cases it is even more

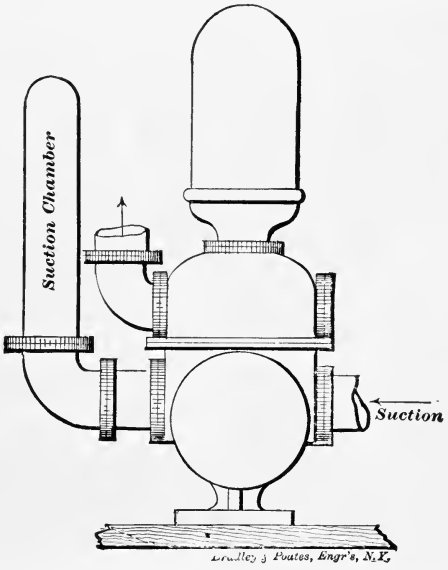

FIG. 151.

essential to put an air-chamber, as in Figs. 150, 151, on the suction side. Fig. 152 is added to show how *not* to apply the air-chamber. On long suction lines this air-chamber takes up the inevitable surging of the water in the suction-pipe due to the irregular taking of water by the pump. It stops the hammer-blow noise heard in pumps that are "pumping dry," as in pumping bilges dry.

Ex. 104. A compound engine of 1000 I.H.P.; cylinder ratio, 1:4; 19 expansions; steam at 165 pounds absolute on the piston; revolutions, 94; vacuum, 26″; using 14.5 pounds of water per I.H.P.; injection, 70; discharge, 110° F.; jet condenser; feed-water, 70° F. in river-mains. Find the size of the feed-pump by calculation or from catalog. Assume positions of machinery and other data that may be required. Use hand-books or other aids.

Ex. 105. Find the size of air-pump for Ex. 104.

Ex. 106. Find the size of reciprocating circulating pump.

Ex. 107. Find the size of centrifugal circulating pump.

Ex. 108. Find the size of a feed-water heater to take care of the exhaust-steam from the steam-cylinders of the above pumps if the discharge-water be unfit to use.

Ex. 109. Design a reheating receiver to superheat exhaust-steam 50°. See page 297.

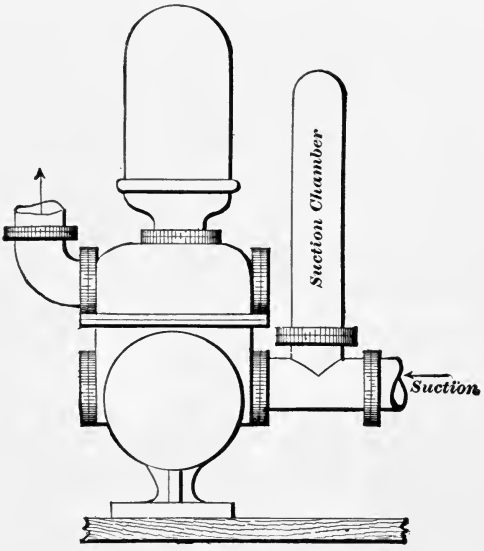

FIG. 152.

Centrifugal Circulating Pumps (Fig. 153).—The inner diameter of the driving-vanes should be 1.1 to 1.4d, where d = the diameter of the single suction- or delivery-pipes, and the outside diameter is 2 to 2.6d. The width of the vane at its inner diameter is .23 to .4d. The width of the vane at its outside diameter may be reduced in proportion to the increase in velocity of the water. Notice proportions in the cut showing double suction-pipes.

If the water enters from one side there is an axial thrust which is avoided by having the water enter on both sides.

The shape of the vanes is such that the water may enter without shock (see steam-turbine calculations). The velocity at the periphery must be 25 to 40 feet per second for a friction-head of 5

to 8 feet, the revolutions varying in general from 150 to 350 per minute.

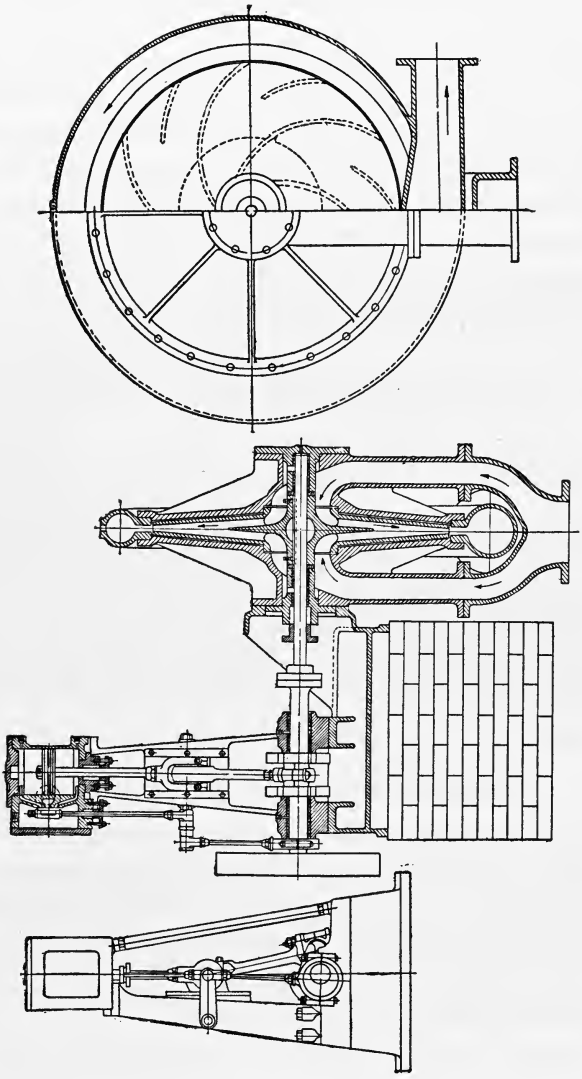

WHEELER CONDENSER & ENGINEERING CO'S.
CENTRIFUGAL PUMP DIRECT CONNECTED TO VERTICAL ENGINE.

FIG. 153.

The engines to drive these pumps must have a horse-power equal to $\frac{Q \times h}{33{,}000} \times 2.75$,

where Q = pounds of water delivered,
h = head in feet.

These engines should develop this power with a pressure equal to .75 boiler-pressure.*

Steam-injector.—Fig. 154 is a diagrammatic sketch of an injector. We owe this invention to M. Giffard, a French engineer. The original invention has been much improved and many carefully worked out devices have been added to make the device reliable and automatic. Its use is practically confined to boiler-feeding, as its efficiency as a pump is very low. As a boiler-feeder its thermal efficiency approaches 100%, as all the heat that it takes from the boiler is returned, but at a lower temperature.

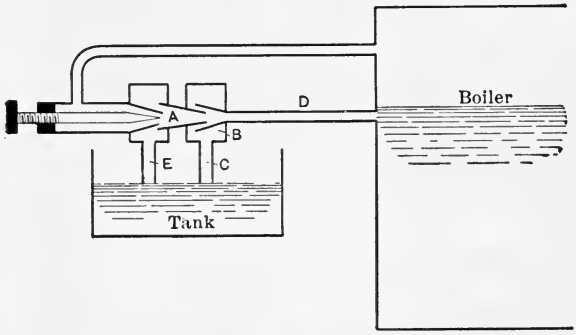

FIG. 154.

The device consists essentially of a steam-nozzle, A; a combining tube, B; and a delivery-tube, D. C is an overflow and E is the suction-pipe.

On page 216 we found that if steam is made to expand adiabatically in a properly proportioned nozzle, the heat lost in expansion was converted into energy of motion, or, in other words, the steam acquired a high velocity. The amount of thermal energy converted into kinetic energy $= \frac{wV^2}{2g} = wh$ is more than sufficient to do the work required in forcing W pounds of feed-water = (12 to 22)w into the boiler against the boiler-pressure, or $wh > (W+w)\frac{P_b}{.43} = (W+w)h_b$, where h_b is a head of water in feet equivalent to the boiler-pressure P_b.

* See Bauer, Marine Engines.

When steam is turned on the injector, the first effect is to drive all air out of the system through the overflow which is open. The partial vacuum allows the atmosphere to force water through the suction-pipe, E, into the combining chamber, B. The steam, issuing from A at high velocity (as soon as the reduction of pressure occurs due to the condensation of the steam), possesses sufficient energy to move a large mass of water with considerable velocity. The combined mass in slowing down can overcome a higher static pressure than its own, and can therefore enter the boiler.

Weight of Feed-water per Pound of Steam.—Assume the steam to be dry, and measuring all heat-units from 32° F.:

Let $q_1 + L_1$ = heat required to produce one pound of steam;
q_2 = heat contained in the feed before entering the injector;
q_3 = heat contained in the feed after leaving the injector;
w = number of pounds of steam used in any given time;
W = pounds of feed-water lifted by the injector in the same time;
$W + w$ = pounds of water delivered by the injector;
$W(q_3 - q_2)$ = heat gained by feed-water;
$w(L_1 + q_1 - q_3)$ = heat lost by the steam;

$$w(L_1 + q_1 - q_3) = W(q_3 - q_2) + (W + w)\frac{V^2}{2g} \times \frac{1}{778}.$$

The last term $(W + w)\frac{V^2}{2g} \times \frac{1}{778}$ is the heat-equivalent to the kinetic energy of the delivered feed-water entering the boiler. As it is very small it may be neglected, hence

$$w(L_1 + q_1 - q_3) = W(q_3 - q_2);$$

$$\therefore \frac{W}{w} = \frac{L_1 + q_1 - q_3}{q_3 - q_2} = \text{weight of feed-water lifted per pound of steam}$$

used by the injection.

Efficiency of the Injector.—A large portion of the kinetic energy of the steam is converted back into heat, as the impact must be that of non-elastic bodies.

Let M_1 = the mass of the steam and V_1 its velocity;
M_2 = " " " " lifted feed and V_2 its velocity;
V_c = " common velocity of the mass $M_1 + M_2$.

We know that the sum of the momenta before impact equals the momentum of the combined mass after impact, or

$$(1)\quad M_1V_1+M_2V_2=(M_1+M_2)V_c,\ \therefore\ V_c=\frac{M_1V_1+M_2V_2}{M_1+M_2}.$$

Let $E_1=\frac{1}{2}M_1V_1^2+\frac{1}{2}M_2V_2^2=$ the sum of the kinetic energies before impact;

$E_2=\frac{1}{2}(M_1+M_2)V_c^2=$ the energy of the total water after impact. Then from (1)

$$V_c^2=\left(\frac{M_1V_1+M_2V_2}{M_1+M_2}\right)^2,\ \therefore\ E_2=\frac{(M_1V_1+M_2V_2)^2}{2(M_1+M_2)}.$$

The initial velocity of the lifted feed is so small that it may be neglected. $M_2V_2^2=0$ approximately, hence $E_1=\frac{1}{2}M_1V_1^2$ approximately. The energy converted back into heat is

$$E_1-E_2=\tfrac{1}{2}M_1V_1^2-\frac{M_1^2V_1^2}{2(M_1+M_2)}=\frac{M_2}{M_1+M_2}E_1.$$

In a locomotive injector one pound of steam is required for every 12 pounds of water lifted; therefore from the above formula 12/13 of the energy of the steam must be converted back into heat.

Disregarding V_2 we have

$$V_c^2=\frac{M_1^2V_1^2}{(M_1+M_2)^2},\quad \therefore\ V_c=\frac{V_1}{13}.$$

Similarly,
$$E_2=\frac{E_1}{13}.$$

If from the entropy diagram we find the velocity of the steam is 2400 feet per second,

$$E_1=\frac{1\times2400\times2400}{2\times32}=90{,}000\text{ ft.-lbs.}$$

The Hancock Inspirator, "Stationary" Type.

Directions for Connecting.

Steam, water, delivery, and overflow connections are as illustrated.

Steam.—Take steam direct from the dome or highest part of the boiler and not from a pipe furnishing steam for other purposes.

Place a globe valve in the steam-pipe for a starting-valve, and before connecting the inspirator blow it out thoroughly to remove any red lead, iron chips, etc.

Suction.—A TIGHT SUCTION is absolutely necessary, especially on a high lift and for the smaller sizes of inspirators.

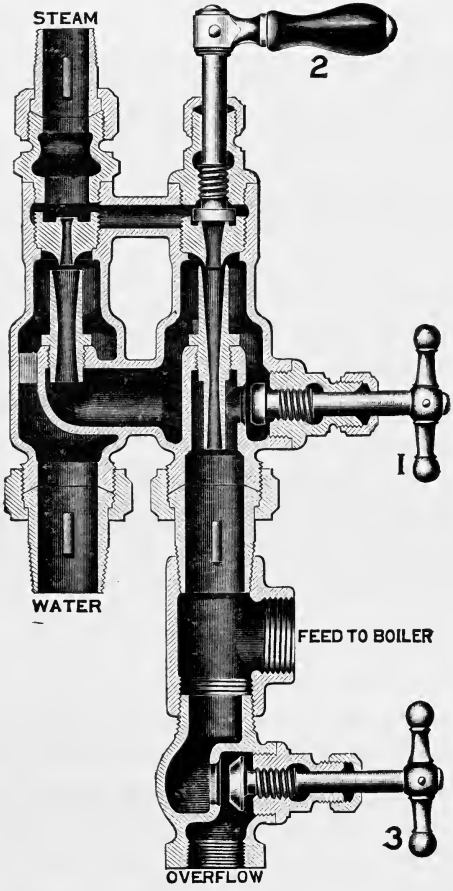

FIG. 155.—Hancock Inspirator.

The size of the suction-pipe should be in proportion to its length. For a high lift or long trail, use pipe one or two sizes larger than the suction connections. The suction-pipe should be as nearly straight as possible.

Never use a foot-valve, as the water should be allowed to drain from the suction-pipe when the inspirator is not in service.

Place a globe valve in the suction-pipe to regulate the supply of water to the inspirator, and KEEP IT WELL PACKED.

Delivery.—Place a check-valve in the delivery-pipe, between the inspirator and the boiler, also a globe valve between the check-valve and the boiler, so that the check-valve may be examined and cleaned when necessary. If the inspirator is to feed through a "heater," there must be a check-valve between it and the inspirator.

Overflow.—The overflow-pipe must be as straight as possible and the full size of the connections. The end of the overflow-pipe must be opened to the air and not piped below the surface of the water.

We do not recommend the arrangement for an inspirator to take water under a head, but the use of a tank fitted with a "ball cock," so that the inspirator may lift the water from it. If it is necessary to connect the inspirator direct to water-works pressure, the suction-pipe must be large enough to secure a uniform pressure. Never take water from a pipe which supplies water for other purposes, as the water-supply may be reduced so much at times as to make it unreliable.

Directions for Operating.

Open the overflow-valves Nos. 1 and 3, close forcer steam-valve No. 2, and open the starting-valve in the steam-pipe.

When the water appears at the overflow, close No. 1 valve, open No. 2 valve one-quarter turn, and close No. 3 valve. The inspirator will then be in operation.

NOTE.—No. 2 valve should be closed with care to avoid damaging the valve-seat.

When the inspirator is not in operation both overflow-valves, Nos. 1 and 3, should be *open* to allow the water to drain from the inspirator.

If the suction-pipe is filled with hot water, either cool off both it and the inspirator with cold water or pump out the hot water by opening and closing the starting-valve suddenly.

No adjustment of either steam- or water-supply is necessary for varying steam-pressures, but both the temperature and quantity of the delivery-water may be varied by increasing or reducing the

water-supply. The best results will be obtained from a little experience in regulating the steam- and water-supply.

To locate a *leak* in the suction-pipe, plug the end, fill it with water, close No. 3 valve and turn on full steam-pressure. Examine the suction-pipe and the water will indicate the leak. If the inspirator does not lift the water properly, see if there is a leak in the suction-pipe. Note if the steam-pressure corresponds with the lift, and if the sizes of pipe used are equal to the size of the inspirator connections.

If the inspirator will lift the water, but will not deliver it to the boiler, see that the check-valve in the delivery-pipe is in working order and does not stick. Air from a leak in the suction connections will prevent the inspirator from delivering the water to the boiler even more effectually than it will in lifting it only. If No. 1 valve is damaged or leaks, the inspirator will not work properly. No. 1 valve may easily be removed and ground.

To remove scale and deposit from the inspirator parts, disconnect the inspirator and plug both the suction and delivery outlets with corks. Open No. 2 valve and fill the inspirator with a solution of one part muriatic acid and ten parts water.

Reheaters.—There is little use in drying steam passing from the high to the low-pressure cylinders, but it is economical to superheat steam that has been dried by passage through a separator. Figs. 156 and 157 show two such reheaters, in which the extent of heating-surface provided is at the rate of 1.25 square feet to the horse-power. The principal data are shown on the cuts.

Oil and Water Separators.—The thermal efficiency of an engine is increased by removing water from the steam before they enter the high, or any succeeding cylinder, or a surface condenser. The thermal efficiency is also increased by removing the oil before it enters any condenser or boiler or any succeeding heating system. Water or oil interferes with the transfer of heat through condenser tubes. It is better to have a solid clean scale a quarter of an inch thick on a boiler tube than an amount of oil that could be placed there by rubbing the tube with a greasy rag. Water carrying oil should not be used as boiler feed-water and steam carrying oil should not be used in radiators or other heating systems.

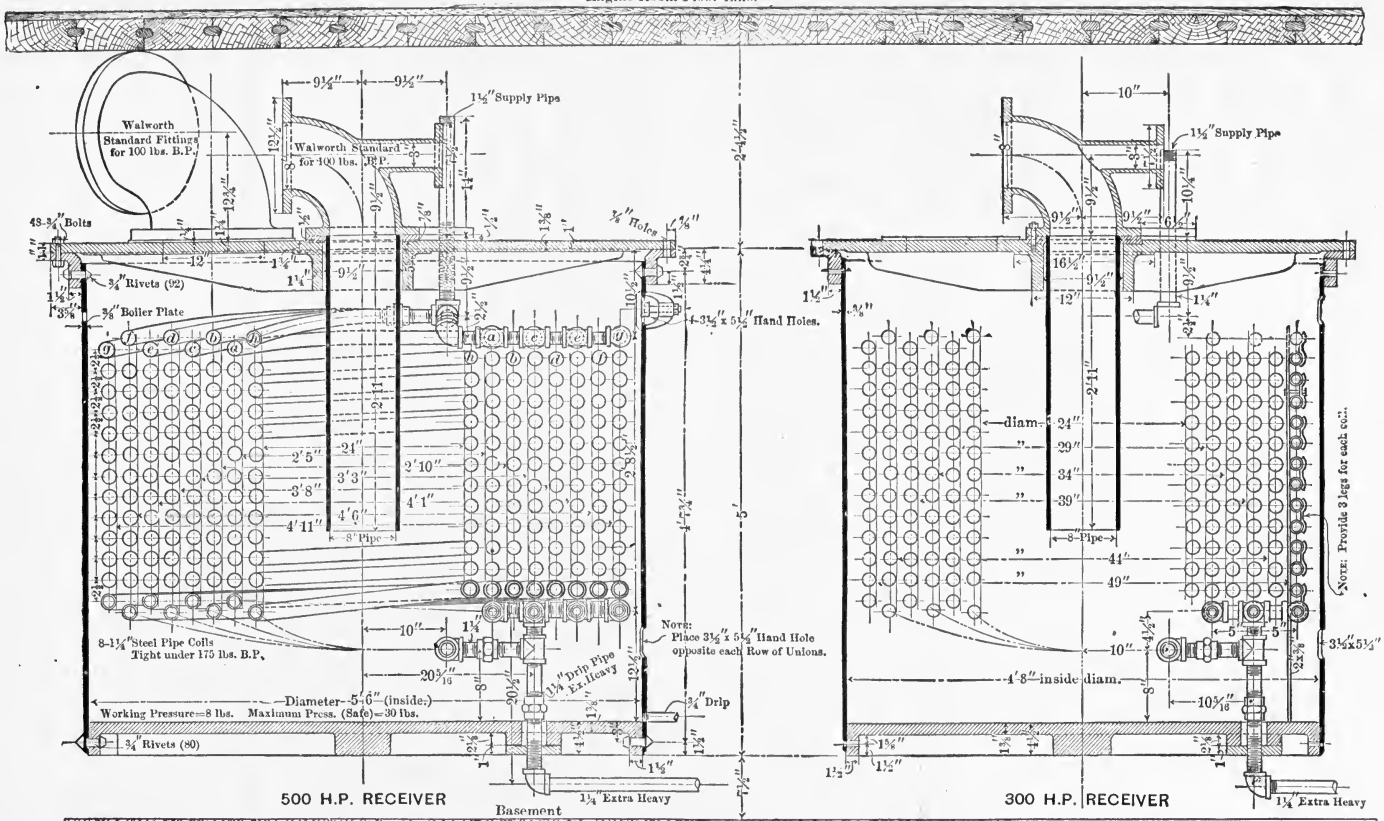
Engine-Room Floor Line.
Walworth Standard Fittings for 100 lbs. B.P.
Walworth Standard for 100 lbs. B.P.
1½" Supply Pipe
48-¾" Bolts
¾" Rivets (92)
⅜" Boiler Plate
3½" x 5½" Hand Holes.
8-1¼" Steel Pipe Coils Tight under 175 lbs. B.P.
Note: Place 3½" x 5½" Hand Hole opposite each Row of Unions.
1¼" Drip Pipe Ex. Heavy
¾" Drip
Working Pressure=8 lbs. Maximum Press. (Safe)=30 lbs.
Diameter—5'6" (inside.)
¾" Rivets (80)
1¼" Extra Heavy
Basement
500 H.P. RECEIVER
8" Pipe
diam—24"
"—29"
"—34"
"—39"
"—41"
"—49"
4'8" inside diam.
3½"x5½"
Note: Provide 3 legs for each coil.
300 H.P. RECEIVER
Note: The 300 H.P. Receiver is like the 500 H.P. size, except that the two outside coils {4'6" / 4'11"} are omitted.
Thurston
AM. SK. NOTE CO. N.Y.

Fig. 156.

Fig. 156*a*.

Fig. 5 represents a separator depending upon centrifugal force. Figs. 157 and 157*a* represent separators in which a ribbed baffle plate is placed at right angles to the current of steam. The ribbing prevents the oil or water from being brushed off by the deflected steam current. The water drains down and out away from all entraining currents.* The vacuum oil-separator is placed on the exhaust pipe of the engine and in addition to the baffle plates it has a circumferential lip to catch the oil that

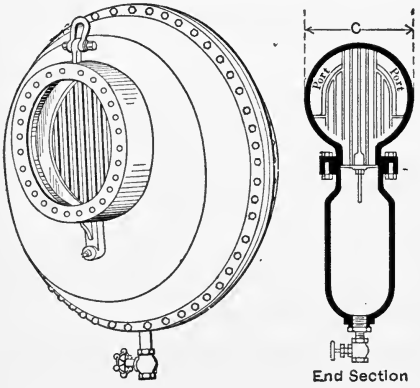

Fig. 157.—Vacuum Oil Separator for Horizontal Pipes 18 inches and larger.

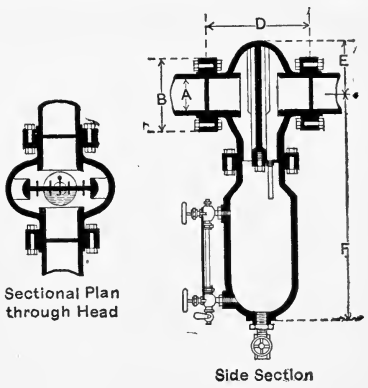

Fig. 157*a*.—Separator.

creeps along the interior surface of the exhaust pipe in the direction of the steam current.

If oil is to be removed from exhaust steam it should be done *before* condensing the steam. It is almost impossible and generally impractical to remove oil from condensed steam. The reason arises from the fact that the oil becomes oxidized on the surface. The oily particles lose all tendency to coalesce and only break down when they are subjected to the high heat of the boiler. In the boiler, the oil unites with the metal of the boiler, forming oleates of iron which has the consistency and strength of graphite.

---

* By enlarging the lower cylindrical body a *separating receiver* is formed which may be used between the various cylinders of multiple-expansion engines.

CHAPTER XI.

MULTIPLE-EXPANSION ENGINES.

THE heat in the steam exhausted from a simple or single engine is wasted, as far as the engine is concerned. In some cases this exhaust-steam is sent to a heater and its heat is saved, but the resulting economy may be considered as belonging to the engine plant rather than to the engine. If this steam is exhausted at considerable pressure above zero, more work might be obtained from it by further expansion. This would necessitate a second cylinder of much larger volume than the first to accommodate the proposed increased expansion of the steam incident to the lowering of its pressure before rejection.

In no case is it economical in simple engines to lower the temperature by expansion below that which may be obtained with considerable ease by utilizing the temperature of natural substances around us. If water be expensive, then it is not economical to expand below the atmospheric pressure. If water is cheap, then we may expand the steam to a pressure not lower than three or four pounds per square inch above the pressure corresponding to the temperature of the water as shown in steam-tables. The back pressure should be as close to the pressure corresponding to the temperature of the injection-water as possible.

Advance in the design of economical engines had to wait on advance in knowledge of methods of manufacturing better materials for use in boiler and engine construction. Lack of proper lubricants for high-pressure steam prevented its use for one or more decades. Failure to experiment restrained advance in all sciences till the middle of the last century. Watt advanced the theory that the water consumption of an engine per horse-power would decrease with increased ratios of expansion, the maximum

LIBRARY OF THE UNIVERSITY OF CALIFORNIA

expansion, however, being that which gave a final pressure equal to the back pressure. In 1840 a Cornish pump was accurately tested, and the water consumption was found to be 24 pounds at 1.5 expansions and 16.5 pounds at 3.5 expansions. This was assumed to prove Watt's theory, and engine-builders gave all the expansion that their form of valve-gear would admit. Gradually it began to be felt that "expansion-engines were expensive engines." From 1840 to 1860 no authoritative experiments were made. At the latter date, Chief Engineer Isherwood, U. S. Navy, published his accurate and elaborate experiments on the U. S. Steamship *Michigan*, and the losses from initial condensation were revealed. A more intimate knowledge of the facts demonstrated that the Cornish engine experimented upon was working under unsuspected advantages, which accounted for its economy. The working end of its cylinder was not exposed to exhaust temperatures, the admission steam was superheated by excessive wire-drawing, and a live-steam jacket effectively reduced internal condensation.

Rankine's analyses of Isherwood's results showed that the initial condensation depended upon the range of temperature to which the cylinder was subjected, and that by dividing this range among two or more cylinders economy would result. In a double-expansion engine, for instance, all the steam condensed in the first cylinder is re-evaporated, and so is capable of performing work in the next cylinder. The condensation in the second cylinder is due to its own range of temperature, which is far less than it would be in a simple engine having the same range of expansion as the compound engine.

During the next forty years competition caused an interesting struggle in the production of record-breaking engines. Pressures rose with the advance in the art of boiler-making and the advent of mineral oils. Triple- and quadruple-expansion engines naturally followed the advance in pressures. High-speed engines showed a marked economy over slow-speed engines. It was claimed that the large clearance spaces of the former caused no loss, because the clearance space was filled by recompressed steam to the boiler-pressure. It has only been in recent years that proper consideration has been given to the large losses that may be expected from

high compression in engines having large ratios of expansion, large clearance surfaces, and early release. With small clearance, a slight degree of compression produces no considerable loss and is conducive to smooth running.

The economy arising from enclosing the working-cylinder with not only non-conducting material, but also with heat-giving fluids, has been recognized. Hot waste gases in jackets caused unequal expansion and trouble in lubrication, so that the use of hot-air jackets soon ceased. The use of steam-jackets continues till this day, but with more general use of steam-superheaters they also will cease to be employed. In the past, however, not only the cylinder-barrel, but also the heads and even the piston have been jacketed. In tests, a gain in economy is shown by their use, because they are regulated properly; in practice, they cease to be economical (when their high cost of installation is considered) if not kept properly drained and the drainage returned at high temperature to the boiler.

We have already seen that the maximum fluctuations of temperature take place only in the innermost layer of the cylinder walls. With a rapidly diminishing range of temperature these fluctuations take place in successive layers till the outermost one is reached. If this outside layer is kept at some constant temperature by means of a jacket the less will be the range of fluctuation the higher the temperature of the steam-jacket, since the heat from the latter is flowing inwardly. As the steam-jacket practically only affects the cylinder steam that comes in contact with the cylinder walls, its value in the case of large cylinders is doubtful.

Reduction of clearance having been found to produce economy, clearance was reduced more and more till the shortening and lengthening of the piston-rod under stress became a subject of consideration (!). It is now recognized that reduction of clearance surface is more essential than reduction of clearance volume. To obtain reduction of clearance volume, the valves are placed in the cylinder-heads to give the shortest possible ports, and separate valves are used for admission and exhaust.

High speeds of rotation having proved economical, Corliss speeded his engines up from 50 to 125 revolutions, and for a long time his engine was considered a high-speed engine. A higher speed with detachable valves is not practical, as the piston travels

too far during the time that the dash-pot is operating the valve. The shaft-governed engines, running at speeds of over 200 revolutions per minute, have put Corliss engines with detachable valves in the slow-speed list. Small engines rotating 400 to 600 times a minute and large engines with a piston speed of 1000 feet per minute are in general use.

We have seen that the second or low-pressure cylinder is larger than the first or high-pressure cylinder in a double-expansion or compound engine; in a triple the third or low-pressure cylinder is larger than the intermediate pressure cylinder, which is larger than the first or high-pressure cylinder. Ordinarily the low-pressure volume may be taken at 3 to 4 times the volume of the high in the compound system, and in the triple the relative volumes are frequently 7, $2\frac{3}{4}$, 1. Rockwood designed a compound engine in which the ratio of the low- to high-pressure volumes was $6\frac{1}{4}$ to 1, or practically a triple with the intermediate cylinder left out. Other data were: Engine room gage, 172.2 pounds: superheat at throttle, 46 degrees; cut-off, .278 stroke; clearance, 4.3 and 5%; revolutions, 80.25; vacuum, 27.7 inches; horse-power, 565.1; steam consumption, 11.22 pounds per I.H.P. A belief immediately arose that high ratios between the cylinder volumes of compound engines, combined with low clearance percentage, were essential to compound-engine economy.

More recent compounds designed by Prof. Rockwood have given better results. A $16 \times 40 \times 48$ Cross-Compound Cooper Corliss Engine, designed by him, consumed 11.22 pounds of water per I.H.P. including steam condensed in jackets and reheater coil. The principal data were: Steam pressure, engine room gauge, 172.2 pounds; superheat at the throttle, 46 degrees; cut-off at .278 stroke; clearance 4.3 and 5%; revolutions, 80.25; vacuum 27.7 inches; horse-power, 565.1.

The following tests, made in the last five years, will demonstrate that, whilst all of the above are contributing, none of them is an essential element to economy. A deficiency in one respect may be more than replaced by an economy in some other direction.

On December 28, 1901, Jacobus—on a Rice and Sargent cross-compound engine, cylinder ratio, 4 to 1; Corliss valve-gear, 121.5 revolutions; steam-pressure, 151.3 pounds; pressure absolute in condenser, .85 pound; live steam in cylinder-head jackets of

both cylinders and in a reheating-receiver—at 627.4 I.H.P. found a water consumption of 12.10 pounds. The clearances were 4.7 and 7%; expansions, 33; initial condensation, 22%. This engine, with ordinary cylinder ratios and ordinary clearances, gave a better economy than the Rockwood engine. It had a better vacuum and a larger ratio of expansion.

Schröter—with a Van den Kerchove poppet-valve compound engine, cylinder ratio, 2.97 to 1; 126 revolutions; steam-pressure, 130 pounds; 27.6″ vacuum; jackets on barrels and heads; no reheater; 32 expansions; 23.5% of initial condensation—at 117 I.H.P. found a dry saturated steam consumption of 11.98 pounds per horse-power.

This result is slightly better than the preceding and on a smaller engine.

Whitham, Andrew, and Wells—on a Westinghouse compound with twin L.P. cylinders; combined poppet and Corliss valve; cylinder ratio, 5.8 to 1; 76 revolutions; clearances, 10.5% and 4%; steam-pressure, 185 pounds; 27.3 inches of vacuum; 29 expansions; 32% initial condensation; no jackets, no reheater—at 5,400 horse-power found a water consumption of 11.93 pounds.

This result is a trifle better than the preceding. We are dealing with a large engine with a fairly large ratio of expansion, but, on the other hand, the revolutions are low, the clearance high.

The only elements in common in the above engines are the high ratio of expansion and a high boiler-pressure. Jackets helped the small engine, and the large one did not need them. Reheaters are probably of little account unless they superheat from 30 to 100 degrees as a minimum limit. Very high expansion may overcome initial condensation losses.

Laying out Theoretical Indicator-cards for Compound Engines.—The essential fact to keep in mind in laying out the theoretical indicator-cards from a compound engine according to the following method is:

The weight or mass of steam *entering* the high-pressure cylinder is the weight or mass that is *rejected* by the low-pressure cylinder.

From this naturally flows the following assumptions:

The mass of steam in the high-pressure cylinder at cut-off =

The mass of steam present in the high-pressure cylinder at exhaust-opening =

The mass of steam in the low-pressure cylinder at the instant of cut-off =

The mass of steam in the low-pressure cylinder at the instant of exhaust-opening.

We shall assume that the exhaust opens at one end and closes at the other end of a stroke, and that there is no clearance in either cylinder and no steam is lost in the cycle. We are not discussing conditions that exist when the engine is first started up or when it is stopping. The engine is supposed to be rotating uniformly and taking regular charges; there is no initial condensation and, consequently, no evaporation. The weight of a mass of steam is known when its pressure and volume are known, and if steam is supposed to expand in accordance with the law $PV=C$ the mass is designated by its product PV.

The student will obtain a better knowledge of the sequence of events in compound engines if he will draw the indicator-cards on cross-section paper from direct calculations, using simple round numbers, instead of substituting in derived formulas that become meaningless from cancellation. After obtaining a full comprehension of the cycle of events in a compound engine, he may derive his own formulas.

Definitions, Figs. 159, 160, 191. When the high- and low-pressure pistons are on one piston-rod, the engine is called a *tandem compound*. In a *cross-compound* engine the piston-rods of the high- and low-pressure pistons are parallel to each other, and their cranks are at right angles, or the piston-rods are at right angles to each other in a plane, which is perpendicular to the crank-shaft, and a single crank is used. There may be more than one low-pressure cylinder. In triple- and quadruple-expansion engines the angle between successive cranks is not necessarily the same in amount, nor is there any compulsory sequence of cranks. In no case should the opening of the exhaust-valve of one cylinder occur before the steam cut-off of the next larger cylinder. As will be shown later, we should avoid transforming energy (that should be available for the production of work) into low-grade thermal energy that cannot be efficiently utilized.

The maximum volume occupied by the steam admitted to a compound engine is the volume of the low-pressure cylinder—minus the volume of the piston, of course—and the minimum

volume is the volume of the high-pressure cylinder up to its point of cut-off; therefore the *total ratio of expansion* is

$$\frac{\text{Volume of L.P. cyl.}}{\text{Volume of H.P. cyl. at cut-off}}$$

Varying the cut-off on the H.P. cyl. varies the amount of heat admitted, but varying the cut-off on the L.P. cyl. has no effect on the amount of heat rejected. The final pressure of expansion in the L.P. cyl. is governed by the H.P. cut-off and the relative sizes of the high- and low-pressure cylinders.

The work done per stroke by any engine depends upon—

1. The mass of steam admitted.
2. The total ratio of expansion.
3. The back pressure at which the steam is finally rejected.

Therefore the work done per stroke is independent of the position of the point of cut-off in the L.P. cyl. For in any given engine the mass of steam admitted depends only on the high-pressure cut-off, and the other two quantities are independent of the L.P. valve.

On the other hand, the percentage of the total power that is developed in each cylinder does depend upon the position of the L.P. cut-off. For it is evident that any cause that increases the back pressure on the piston of an engine decreases the power of that engine. If the cut-off on the L.P. cyl. is shortened, the pressure in the receiver is increased, since the same mass must be admitted into the L.P. cyl. as before, and the volume in which it is to be contained has been decreased. As the receiver pressure is the back pressure on the H.P. piston, increasing the receiver pressure decreases the work done in the H.P. cyl. As the total power of both engines has not been altered, it follows that the work in the L.P. cyl. has been increased. The only use of the L.P. cut-off valve is, then, to regulate the percentage of the total power developed in each cylinder.

Tandem Compound Engine Without a Receiver (Fig. 158).—Draw the cards for a tandem compound engine, initial pressure, 100 pounds abs.; back pressure, 3 pounds abs.; volume of H.P. cyl., 4 cubic feet; volume L.P. cyl., 16 cubic feet; cut-off in the H.P. cyl., 1/2 stroke.

Since there is no receiver there can be no cut-off on the L.P. cyl. Practically there is always a small receiver, as the pipes leading to the L.P. cyl. from the H.P. cyl. always form part of the receiver. Theoretically, however, we may assume their volume as zero.

Lay off on *AB* the pressure 100 pounds abs.

Lay off on *BC* the volume of the L.P. cyl., 16 cubic feet.

Lay off $AD = 2$ cubic feet $= 1/2$ the volume of the H.P. cyl.

At steam cut-off in the H.P. cyl. $P_1V_1 = 100 \times 2 = 200$, the constant mass passing through the system.

At exhaust-opening in the H.P. cyl. $P_2V_2 = 200$, but $V_2 =$ volume of H.P. cyl. $= 4$ cubic feet. $\therefore P_2 = 50$ pounds, giving point *E*.

The mass in the L.P. cyl. at the moment the exhaust-valve opens $= 200$.

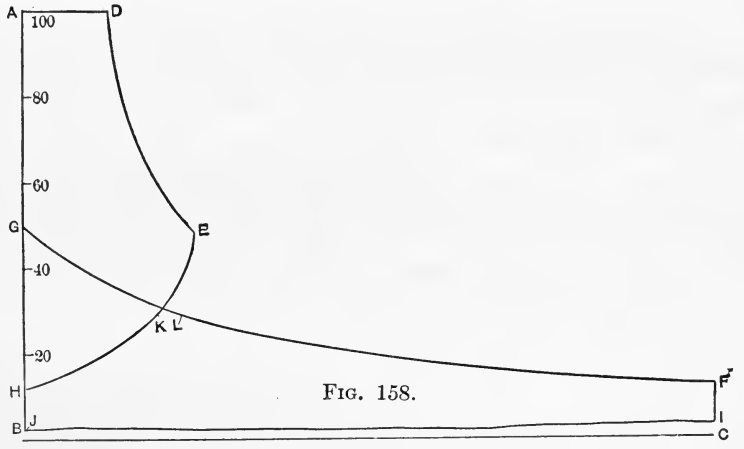

FIG. 158.

The volume of the L.P. cyl. $= 16$. $\therefore P_3 = \frac{200}{16} = 12\frac{1}{2}$ pounds, giving point *F*.

At the end of the high-pressure stroke we have the H.P. cyl. full of steam at pressure of 50 pounds. The opening of the exhaust-valve admits this pressure on the L.P. piston without change, as the volume of the connecting pipe is zero. Therefore the admission pressure in the L.P. cyl. is 50 pounds.

Lay off $BG = 50$, thus giving the point *G*.

The pressure in the L.P. cyl. varies gradually from *G* to *F*, hence draw a smooth curve, *FG*.

The back pressure of the H.P. cyl. is the same as the forward pressure in the L.P. cyl.

Lay off $HB = FC$ and draw curve EH.

Lay off $CI = 3$ pounds and draw IJ; it will be the back pressure of the L.P. cyl.

The curves GF and EH are not hyperbolic curves. Intermediate pressures may be found as follows:

Suppose the pistons are at 1/4 stroke on the return. Then 3 cubic feet at the exhausting end of the H.P. cyl. would be connected to 4 cubic feet on the steam side of the L.P. cyl. This mass in this case must = 200.

Hence $\frac{200}{7} = 28\frac{4}{7}$ pounds would be the required pressure to be laid off, giving points K and L.

The cards from the ends of each cylinder are similar.

Cards from tandem compound steam-pumps are similar to the above.

Ex. 110. The diameter of the H.P. cyl. = 1′; diameter L.P. cyl., 2′; stroke, 3′; initial pressure, 120 pounds absolute; back pressure, 3 pounds absolute; 12 expansions. Draw the cards. Use relative instead of absolute volumes.

Tandem Compound Engine with a Receiver (Fig. 159).—Initial pressure, 120 pounds abs.; volume of H.P. cyl. = 4 cubic feet; volume L.P. cyl. = 12 cubic feet; volume of the receiver = 6 cubic feet; cut-off in H.P. cyl. at 1/4 stroke; cut-off in L. P. cyl. at 3/4 stroke; back pressure, 3 pounds abs.

Lay off $AB = 120$ pounds,

Lay off $BC = 12$ cubic feet and $BD' = 4$ cubic feet,

Lay off $AD = 1$ cubic foot or 1/4 the vol. of H.P. cyl.,

then the constant mass $= 120 \times 1 = 120$.

The volume occupied by the steam in the H.P. cyl. as the exhaust-valve is about to open = 4 cu. ft.; therefore the pressure $= \frac{120}{4} = 30$, giving the ordinate of point E. DE is an hyperbola.

When the exhaust-valve is about to open in the L.P. cyl. the mass present = 120 and the vol. = 12 cubic feet, therefore the pressure $= \frac{120}{12} = 10$ pounds, or the ordinate of point F.

At the instant of cut-off in the L.P. cyl. the mass present = 120, and it will be the mass rejected, since there is no clearance

The pressure at cut-off or G will be $\frac{120}{9}=13\frac{1}{3}$ pounds, because the vol. of the L.P. cyl. at cut-off $=\frac{3}{4}\times 12=9$ cu. ft.

Draw GF; it will be an hyperbola.

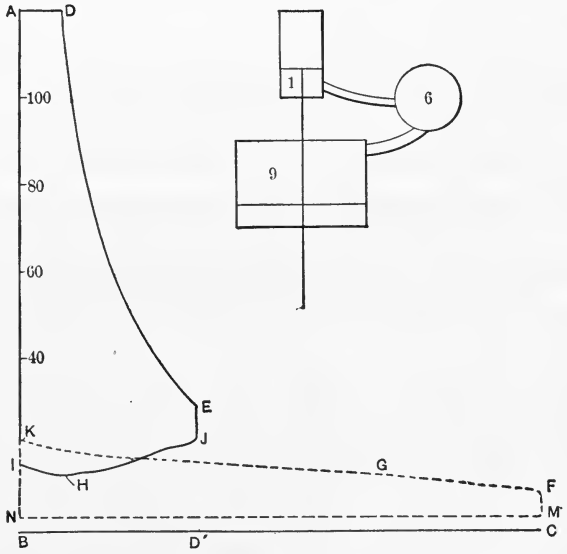

FIG. 159.

We assume that the pressures in the L.P. cyl. at the instant before its cut-off, at its cut-off, and the instant after its cut-off are identical. The instant before cut-off in the L.P. cyl. the exhaust from the H.P. cyl. was in communication with the receiver, and the latter was in communication with the L.P. cyl. The pressures in all three must have been identical and equal to that in the L.P. cyl. at its cut-off.

As the L.P. piston is at 3/4 stroke, the H.P. piston must be at 3/4 of its stroke, so that the volume of the H.P. cyl. on the *exhaust* end must be $(1-\frac{3}{4})4=1$ cu. ft. This is open to the receiver with a volume of 6 cu. ft. The back pressure at H on the H.P. piston $=13\frac{1}{3}$, and the mass must be $7\times 13\frac{1}{3}$.

Since the cut-off valve on the L.P. cyl. is closed, further movement of the H.P. piston must compress this mass into the volume of the receiver alone. The rise in pressure must be $\frac{(6+1)\times 13\frac{1}{3}}{6}=15.55$ pounds, or the ordinate of I. Draw HI.

The back pressure on one side of the H.P. piston is 15.55 pounds, and the forward terminal expansion pressure on the other side of this piston is 30 pounds. The next instant, the H.P. exhaust-valve opens, and these masses with these two pressures form one mass. A common pressure will be attained immediately. The masses joined are 30×4 and 6×15.5, or $120+93.3=213.3$. As the volume of the combined mass is $4+6=10$, the common pressure is 21.33 pounds, which is the value of the ordinates of K and J.

Join K and G, it will be the admission curve of the L.P. cyl.

Join J and H, it will be the corresponding back-pressure line of the H.P. piston.

Lay off $CM=3$ pounds and draw MN, it will be the back-pressure line of the L.P. piston.

Ex. 111. Data same as in preceding example, except that there is a receiver whose volume is twice that of the H.P. cylinder.

Cross-compound Engines. — In cross-compound engines the cranks of the high- and low-pressure engines are at right angles to one another. There must be a receiver between the two engines, as the high-pressure exhaust occurs when the low-pressure piston is at half-stroke. In addition to the work in the preceding case we have to find the positions of one piston when the other is at critical points, such as cut-off, exhaust-opening, etc. It is essential to decide on the character of rotation, whether clockwise or the reverse, and also fix on the crank that is leading. Much help will be found in diagrammatic sketches for each critical position, showing piston positions and the volumes that are in communication at such critical positions (Figs. 159 and 160).

Cross-compound Engines.—Draw the cards from a cross-compound engine, L.P. crank leading; rotation clockwise; initial pressure H.P. cyl., 180 pounds abs.; number of expansions, 30; ratio of cylinder volumes, 6 to 1; volume of H.P. cyl., 5 cu. ft.; volume of receiver, 10 cu. ft.; cut-off on L.P. cyl., 1/3 stroke; back pressure in L.P. cyl., 1 pound abs.

Volume of L.P. cyl. $=6\times5=30$.

Volume of H.P. cyl. at cut-off $=\frac{30}{30}=1$ cu. ft.

Ratio of expansion in H.P. cyl. $=\frac{5}{1}=5$.

The volume of L.P. cyl. at cut-off $=\frac{30}{3}=10$ cu. ft.

The constant mass passing through the cycle or $P_1V_1=180\times1=180$.

The pressure at cut-off in the L.P. cyl. must equal $\frac{180}{10}=18$ pounds $=H$.

Lay off $AB=180$ pounds; $AC=30$ cu. ft.; $BD=1$ cu. ft.; then $EF=\frac{180}{5}=36$ pounds and $CG=\frac{180}{30}=6$ pounds, and the ordinate at H is laid off for 18 pounds. Join H and G by an hyperbola.

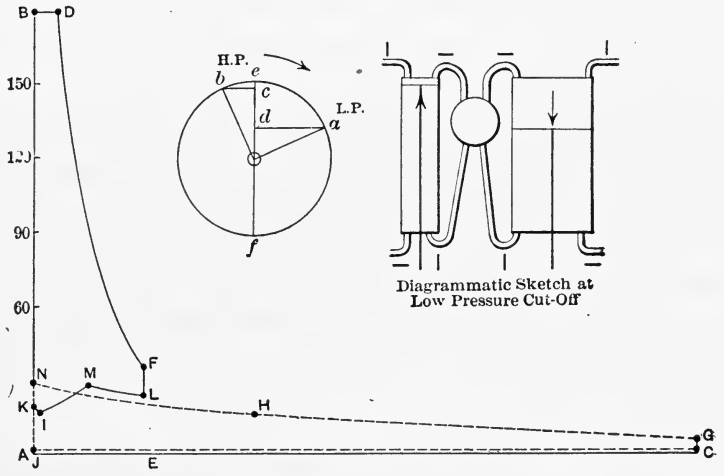

FIG. 160.

Check. The pressure at H is three times that at G.

We must now find the volume of the H.P. cyl. that is exhausting into the receiver at an instant before L.P. cut-off takes place. If the length of the connecting-rod is to be considered, graphic construction will be found easier than by analysis. For simplicity we shall assume infinite rods and obtain our results analytically.

Draw the circular diagram (Fig. 160) in accordance with the data. It is evident that ce represents the desired volume if ef represents the volume of the H.P. cyl.

$$ed=\frac{ef}{3},\quad od=\frac{ef}{2}-\frac{ef}{3}=\frac{ef}{6};$$

hence

$$da = oc = ef\sqrt{(1/2)^2 - (1/6)^2} = .47\ ef,$$

$$ec = .50\ ef - .47\ ef = .03\ ef.$$

The required volume is therefore $.03 \times 5$ cu. ft. $= .15$ cu. ft.

Hence the pressure in the L.P. cyl. at cut-off, in the receiver and in the H.P. cyl. when the piston of the latter has .15 cu. ft. of exhaust-steam behind it is 18 pounds.

Lay off $AJ = .15$ cu. ft. and lay off an ordinate $= 18$ pounds, thus finding point I.

As the H.P. piston moves to the end of its stroke all the steam in the H.P. cylinder on the exhaust side and in the receiver will be compressed into the receiver volume alone, as the L.P. valve has cut-off steam admission. The pressure in the receiver—whose volume is 10 cu. ft.—when the H.P. piston reaches the end of its stroke will be $\frac{18(.15+10)}{10} = 18.27$ pounds or the ordinate at K. There is assumed to be no exhaust lap on the high-pressure valve.

The next instant the exhaust from the other side of the H.P. piston is opened to the receiver and the two masses must come to a common pressure. The sum of the two masses is proportional to $5 \times 36 + 18.27 \times 10 = 362.7$, and the common volume is $5 + 10$ cu. ft., or the sum of the volumes of the H.P. cyl. and receiver.

The pressure at L is then $362.7 \div 15 = 24.2$ pounds. On this diagram there is no corresponding point on the L.P. diagram, as its valve is closed.

The pressure having dropped from F to L at the opening of the exhaust-valve, the H.P. piston now starts on its return-stroke, sweeping steam into the receiver. This continues till the H.P. piston reaches half-stroke. No steam is taken from the receiver during that interval, as cut-off on the L.P. cyl. took place before half-stroke.

A mass of 362.7 is forced into a volume of $\frac{5}{2} + 10 = 12.5$, and the resulting pressure will be $\frac{362.7}{12.5} = 29$ pounds, which is not only the back pressure on the H.P. piston at the middle of its stroke at M, but is also the initial pressure on the L.P. piston at N. Join

L and *M*, *M* and *I*, *N* and *H*. These curves are not hyperbolic curves and may be sketched in. Intermediate points can be found by calculating volumes and pressures.

Draw the back-pressure line for the L.P. cyl. at 1 pound above the absolute zero line.

Ex. 112.—Diameter of the H.P. cyl. is 20″; stroke, 40″; cut-off H.P. cyl., 1/4 stroke; total expansions = 16; initial pressure, 160 abs.; back pressure, 3 pounds abs.; volume of the receiver, 3/2 that of H.P. cyl.; cut-off in L.P. cyl., 3/8 stroke. (Assume volume of H.P. cyl. = 4.)

Cross-compound with L.P. Cut-off after Half-stroke (Fig. 161)

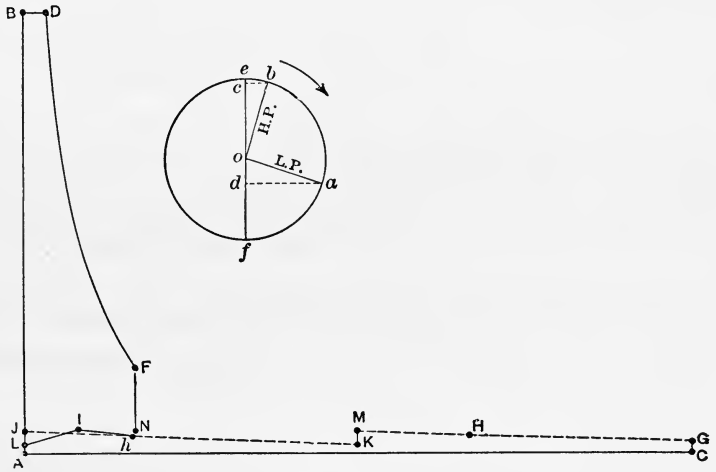

FIG. 161.

—If the cut-off on the L.P. cyl. has not taken place before half-stroke, it is evident that, when the high-pressure exhaust opens, the common volume will be the volume of the H.P. cyl., the receiver, and half the volume of the L.P. cyl. The result is a hump in the middle of the L.P. card. This indicates a loss of efficiency, for whenever high-pressure steam is allowed to enter a space filled with steam of a lower pressure, there is a transformation of energy into heat that could have been converted into work. Keeping in mind that the object of a steam-engine or steam-turbine is the transformation of heat into work, any reversal of that process is certain to produce a loss in the number of foot-pounds of work.

In Fig. 160 the drop FL, known as receiver drop, is not economical when excessive, and hence for best results thermodynamically LE should be made to equal FE by cutting off shorter in the L.P. cyl. If this results in making the L.P. card larger than the H.P. card, the engines will develop different horse-powers, which will produce non-uniform rotation.

Take the same data as in the preceding problem and let the cut-off on the L.P. cyl. be at 2/3 stroke.

The points B, D, F, and G will be in the same position as before.

At cut-off in the L.P. cyl. the volume is 20 cu. ft. and the mass is $180\times1=180$, therefore the pressure $=\frac{180}{20}=9$ pounds, giving H and h.

Check. Expanding 20 cu. ft. at 9 pounds to 30 cu. ft. the pressure becomes 6, as found.

Drawing the circular diagram and laying off crank positions in accordance with the data we find

$$df=\frac{ef}{3},\ od=\frac{ef}{6},\ da=oc=.47\ ef.\quad\therefore\ cf=.97\ ef.$$

The volume of the H.P. cyl. exhausting into the receiver at this cut-off of the L.P. cyl. is then $.97\times5$ cu. ft. $=4.85$ cu. ft.

The mass in the H.P. cyl. and the receiver at the instant of L.P. cut-off is then $9\times(4.85+10)=133.65$.

Rotate the crank-shaft till the L.P. is at the end of its stroke. The H.P. piston compresses the above mass into the volume of the receiver and half the volume of the H.P. cyl. The pressure therefore rises to $\frac{9\times14.85}{2\frac{1}{2}+10}=10.7$ pounds, which is therefore the value of the ordinate, I, at the middle of the return-stroke of the H.P. cyl., and of J, which is the initial pressure in the L.P. cyl.

Rotate the crank till the H.P. piston reaches the end of its stroke. During this period the volume of the H.P. cyl. exhaust is rapidly diminishing, but the volume of the L.P. cyl. is increasing more rapidly, so that the pressure in the receiver is falling till half-stroke. At that time the pressure is $\frac{9\times14.85}{10+15}=5.34$ pounds, which will be the value of the ordinates K at the middle of the L.P. stroke and of L at the end of the H.P. stroke. Join I and L,

J and K. These curves represent the same change of pressure, being the back pressure on the H.P. piston and the forward pressure on the L.P. piston.

An infinitesimal movement of the crank produces the next event, viz., opens the exhaust of the H.P. cyl. into the receiver and the L.P. cyl. whose steam-valve is wide open.

The sum of the two masses united is $36\times5+5.34\ (10+15)=313.65$, and the common volume is $5+10+15=30$ cu. ft., hence the common pressure is $\frac{313.65}{30}=10.45$, which is therefore the ordinate at M and N. Join N and h, h and I, K and M, M and H. Draw the back-pressure line on the L.P. diagram.

Ex. 113. Data as in preceding example, but assume cut-off at 5/8 stroke.

Ex. 114. Alter the data of the preceding example to obtain equal horse-power in each cylinder.

Ex. 115. Alter the data to obtain the same range of temperature in each cylinder.

Ex. 116. Alter the data in the preceding example, giving clearance and points of exhaust opening and closing in each cylinder, but use an infinite connecting-rod.

To Find the Sizes of Cylinders for a Compound Engine.—The power of any engine per stroke is determined by the mass of steam admitted and its ratio of expansion. All the power of a compound or other multiple-expansion engine could be developed in its low-pressure cylinder, disregarding for a moment the necessary strength of parts and condensation, since, if we admitted into that cylinder the same mass as was admitted into the high-pressure cylinder, we may expand that mass in this cylinder the same number of times as in the multiple-expansion engine against the same back pressure.

Find the diameters of the high- and low-pressure cylinders of a cross-compound engine, gage pressure at the boiler, 150 pounds; total ratio of expansion, 16; ratio of low-pressure cylinder area to that of the high, 4 to 1; assumed diagram factor derived from engines of about the same power and of the same general design, 83%; back pressure in the condenser is 1 pound absolute; revolutions, 120; horse-power, 1000, stroke, 42″.

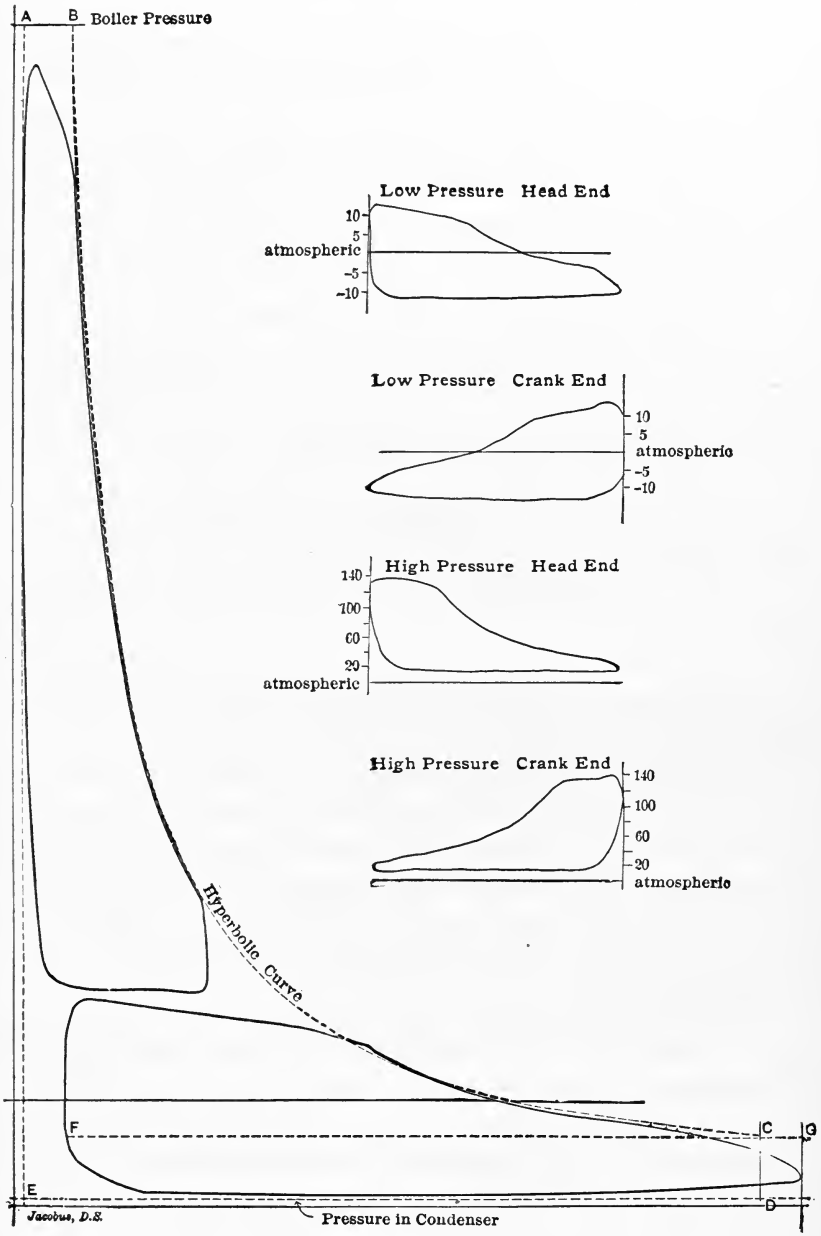
A
B
Boiler Pressure
Low Pressure Head End
10
5
atmospheric
-5
-10
Low Pressure Crank End
10
5
atmospheric
-5
-10
140
100
60
20
atmospheric
High Pressure Head End
High Pressure Crank End
140
100
60
20
atmospheric
Hyperbolic Curve
F
C
G
E
D
Jacobus, D.S.
Pressure in Condenser

FIG. 162.

Expected mean effective pressure

$$= \left\{ \frac{165\ (1 + \log_e 16)}{16} - 1 \right\} .83 = 31.45 \text{ pounds.}$$

For cards, see Fig. 111.

$$\frac{31.45 \times 3.5 \times A \times 240}{33{,}000} = 1000. \quad \therefore\ A = 1250 \text{ or } d = 40''.$$

The diameter of the high-pressure cylinder is 20″. Cut-off in the high-pressure cylinder is at a little less than 1/4 stroke.

Assume clearance in high-pressure cylinder is 5%, and in the low is 7%, and that the volume of the receiver equals the volume of the L.P. cylinder.

To Combine Indicator-cards of a Compound Engine.—"The 'Combined Diagram' is a hypothetical figure, which in its essential features represents an indicator-diagram which would be obtained if the whole process of admission, expansion, and exhaust occurred in one cylinder, viz., the low-pressure cylinder. It is a diagram from which the pressure of the steam at any point in the stroke of either cylinder, and the volume of that steam, can be measured from one diagram in the same manner that it can be measured in the case of a single-cylinder engine from the actual indicator-diagram.

"The general method of laying out a combined diagram is shown in the appended cuts, Figs. 163 and 165, the first of which refers to a Corliss compound engine (receiver engine), in which the ratio of volumes of the two cylinders is as 3.72 to 1, and the clearance of the high-pressure cylinder is 4 per cent, and of the low-pressure cylinder is 4.8 per cent; and the second to a Westinghouse compound engine (Woolf engine), in which the ratio of the volumes is as 2.72 to 1, and the clearance 33 per cent and 9 per cent respectively." †

In the single cards the high- and low-pressure diagrams are of approximately the same length. Since there is a radical difference in the volumes represented by the lengths of the cards, there must be a radical difference in their scale of volumes. Similarly the scale of pressure in each card is different. In the combined diagram there is only one scale of volumes and one scale of pressure.

† Standard Engine Tests.

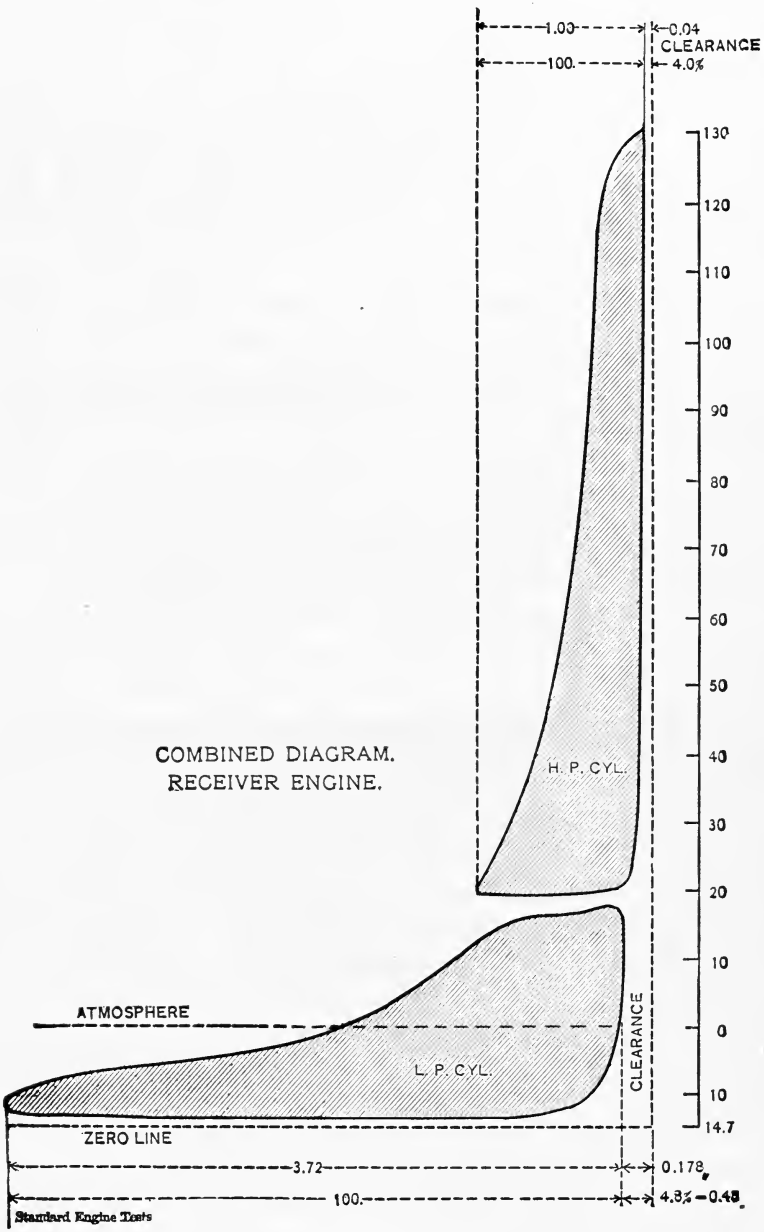
1.00
0.04
CLEARANCE
100.
4.0%
130
120
110
100
90
80
70
60
50
40
30
20
10
0
10
14.7
COMBINED DIAGRAM.
RECEIVER ENGINE.
H. P. CYL.
ATMOSPHERE
L. P. CYL.
CLEARANCE
ZERO LINE
3.72
0.178
100.
4.8% - 0.48
Standard Engine Tests

FIG. 163.

To Draw the Combined Diagram.—Draw any line to represent the clearance line as in Fig. 163. Perpendicular to it, at any given point, erect a line, called the zero line, whose assumed length will represent the volume of the low-pressure cylinder plus the clearance. Lay off this clearance. Divide the remainder into any number of parts and divide the atmospheric line of the low-pressure diagram (limited by the end ordinates of the diagram) into the same number of parts. Draw ordinates through these points and lay off in the combined diagram (in accordance to its assumed

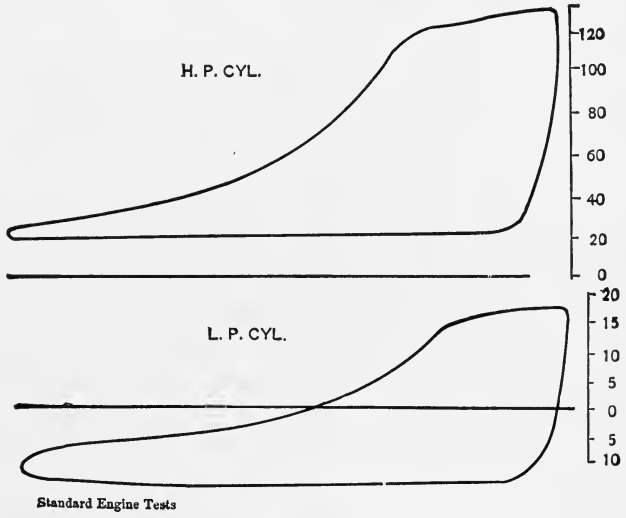

FIG. 164.

scale of pressures) the pressures as determined by the length of the corresponding ordinates in the single card.

To the same scale of volumes lay off the volume of the high-pressure cylinder and its clearance from the clearance line or line of zero volume. As before, after laying off its clearance, divide the remainder into any number of parts and divide the length of the high-pressure card into the same number of parts. Convert the ordinates of the high-pressure card into pressures and lay off these pressures (to the chosen scale for the low-pressure card) in the combined diagram.

Practical Diagrams.—In the formation of the theoretical diagrams just described many assumptions were made that are impossible of attainment in practice. There is—

1. The loss due to drop of pressure between the steam-boiler and the piston. This includes loss in the pipe, bends, valves, and separators. It varies from 5% of the boiler-pressure upwards, depending upon conditions.

2. The steam-valve opens the port gradually, and there must be a considerable difference in pressure between the steam in the chest and that inside the cylinder to generate the high velocity demanded when the port is nearly closed. The corner at cut-off is rounded off.

3. The loss due to drop when the H.P. exhaust-valve opens.

4. The corresponding losses of pressure in the steam entering the L.P. cylinder or cylinders.

5. The reduction of the mass of steam in the cycle. The steam *from* the H.P. cylinder should pass through a separator and the water separated out should be returned to the boiler, and hence passes out of the cycle.

6. A loss due to deficient vacuum. One or two inches of vacuum make considerable difference in the total pressure on a L.P. piston. This amount is frequently lost through allowing avoidable air-leaks, greasy tubes, defective air-pump, etc. The loss of one inch of vacuum on an 80-inch piston would cause the continuous loss of over a ton of force.

7. The exhaust opens gradually instead of instantaneously at the end of the stroke. This causes a small loss.

8. Clearance space and clearance surface cause much loss.

Ratio of Expansion.—The rounding of the corners necessitates a definition of the ratio of expansion in a compound engine.

"In a multiple-expansion engine it is determined by dividing the net volume of the steam indicated by the L.P. diagram at the end of the expansion line, assumed to be continued to the end of the stroke, by the net volume of the steam at the maximum pressure during admission to the high-pressure cylinder.

"For a compound engine, referring to the combined diagram (Fig. 166), the ratio of expansion is the distance CD divided by the distance AB, in which E and F are points on the compression and expansion lines respectively of the high-pressure diagram, the latter being near the point of cut-off, and H and G points on the compression and expansion lines of the low-pressure diagram, the

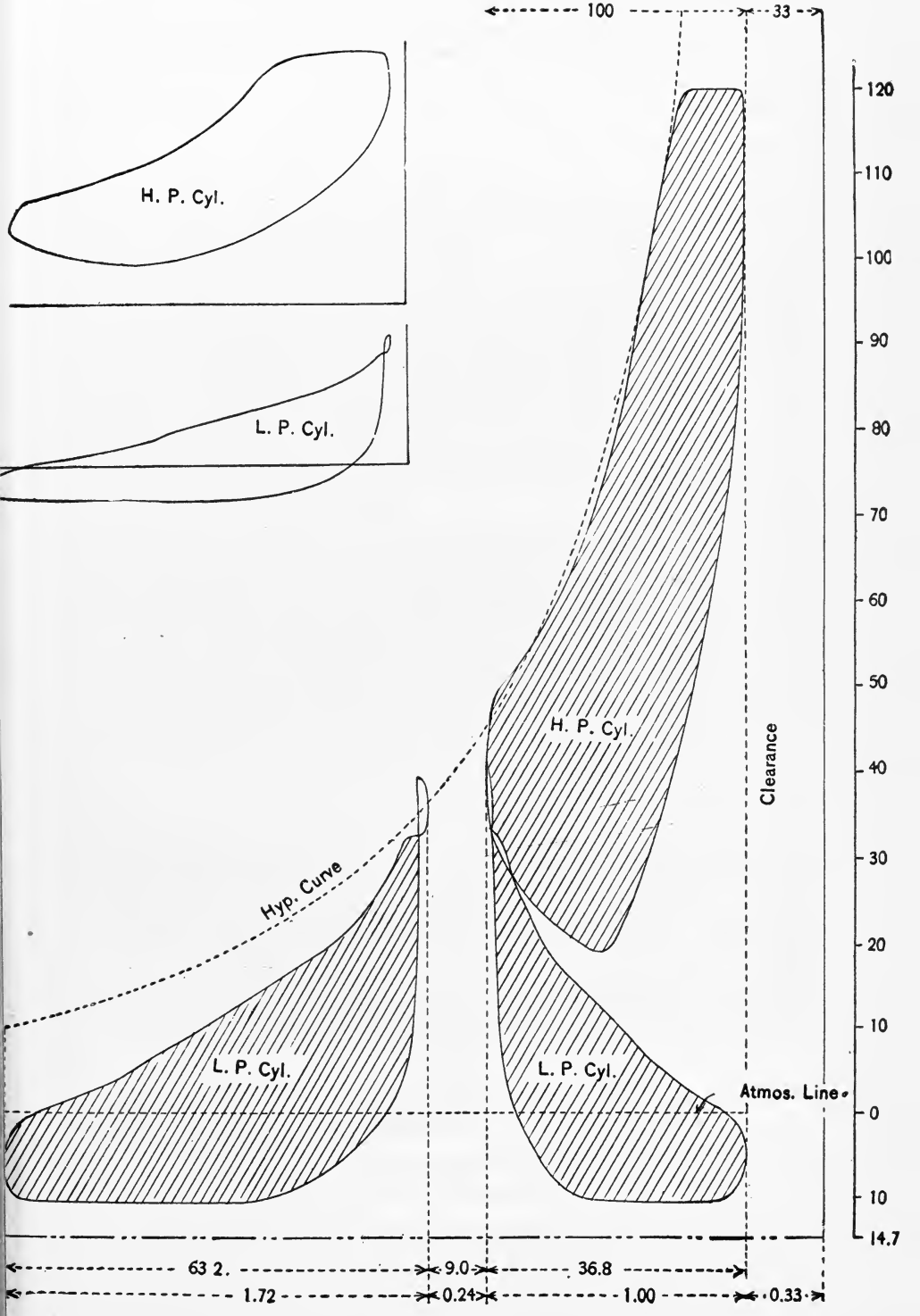
100
33
H. P. Cyl.
L. P. Cyl.
H. P. Cyl.
Clearance
Hyp. Curve
L. P. Cyl.
L. P. Cyl.
Atmos. Line
120
110
100
90
80
70
60
50
40
30
20
10
0
10
14.7
63 2.
9.0
36.8
1.72
0.24
1.00
0.33

FIG. 165

latter being near the point of release, and the curves *EA*, *FB*, *HC*, and *GD* being hyperbolic. If it is desired to determine the ratio without laying out the combined diagram, it can be done by drawing on the original diagrams the hyperbolic curves referred to above and multiplying the ratio of volumes of the cylinders,

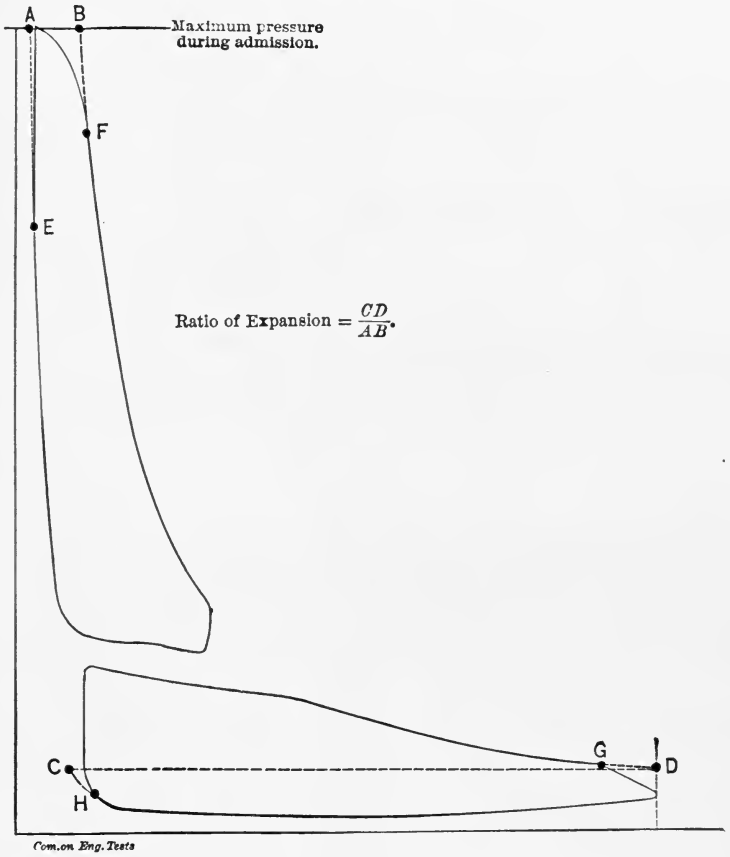

FIG. 166.

first by the ratio of the length of the high-pressure diagram to the distance *AB*, and then by the ratio of the distance *CD* to the length of the low-pressure diagram.

"**Diagram Factor.**—The Committee's definition of the 'Diagram Factor' was given in the case of simple engines. In Fig. 167 the diagram factor is the proportion borne by the area of the two

NC is determined for the high-pressure diagram in the same way as *RS* in Fig. 50.

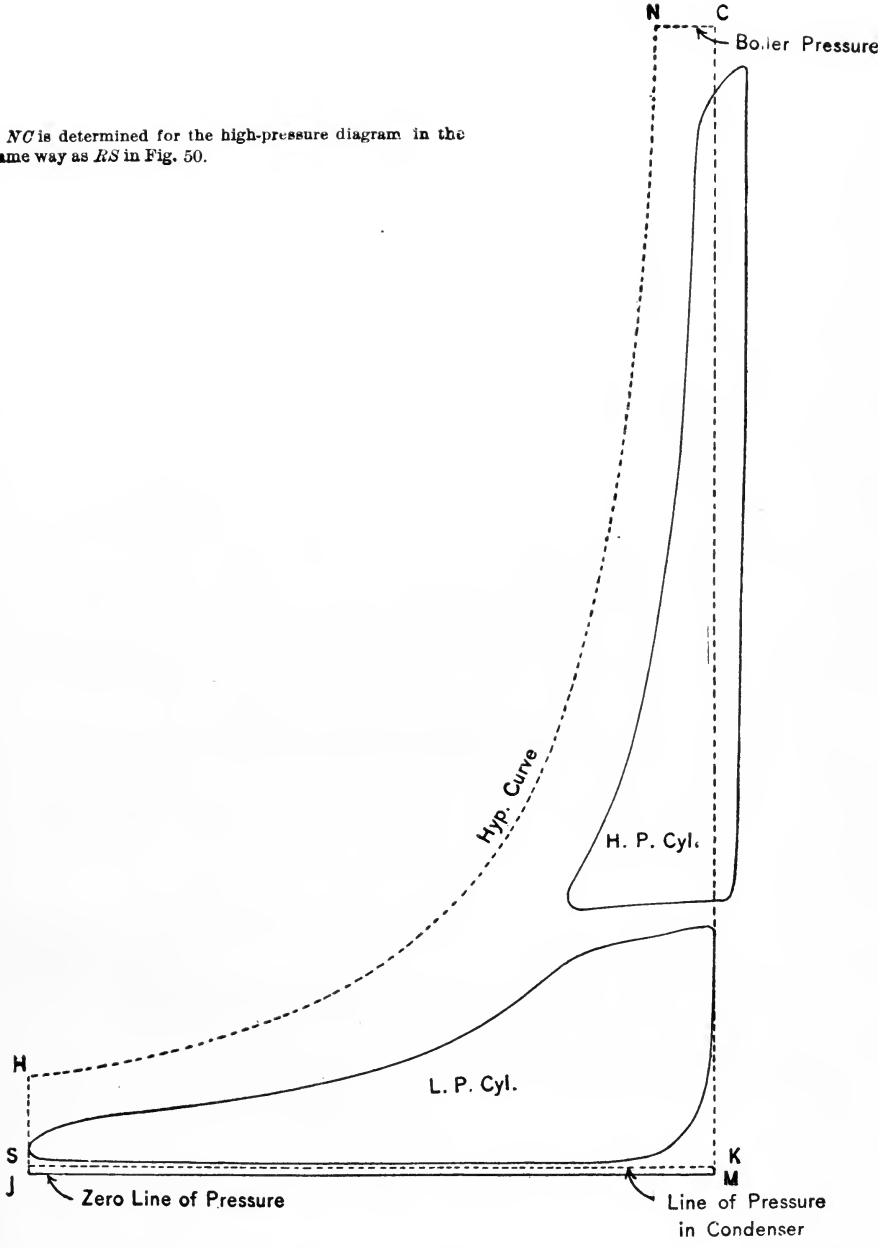

FIG. 167.

combined diagrams to the area *CNHSK*. In Fig. 167 the distance *CN* for the high-pressure cylinder is found in the same manner as in the case of the simple engine. . . . The mean effective pressure of the ideal diagram can readily be obtained from the formula

$$\frac{P}{R}(1+\text{hyp. log } R)-p,$$

where P is the absolute pressure of the steam in the boiler, R the ratio $\frac{MJ}{CN}$, and p the pressure of the atmosphere or in the condenser."†

Diagram factors for compound engines:

High-speed, short-stroke, unjacketed	60 to 80%
Slower rotational speeds	70 " 85
" " " jacketed	85 " 90
Corliss	85 " 90
Triple-expansion	60 " 70

(See Vols. XXIV and XXV, Trans. A. S. M. E.)

Jacketing, reheaters, and superheaters modify the diagram factor considerably.

In marine engines these factors are much lower. Bauer and Robertson, "Marine Engines and Boilers," give:

Expansion in a single-cylinder:

Large slow-speed engines	70 to 75%
Small high-speed engines	65 " 70

Expansion in two-cylinder or compound engines:

Large engines up to 100 revolutions per minute	60 " 67
Small engines with a higher number of revolutions	55 " 60

Triple-expansion in three cylinders:

War-vessels with a high number of revolutions	53 " 54
Mercantile vessels up to 100 revolutions per minute	56 " 61

In multiple-expansion engines the weight of authority is in favor of expanding in all cylinders but the low-pressure to a pressure equal to the back-pressure, i.e., there will be no drop in the re-

† Standard Engine Tests.

ceiver. The explanation of the difference lies in initial condensation.

"The reason why condensation effects this change *is not* that *some* steam is condensed in the cylinder each stroke, but that the condensation is *not* in *proportion* to the steam admitted and the work done, but is nearly a fixed amount per stroke for a given set of conditions. If more steam is admitted, the amount condensed is practically the same, but the proportion which is condensed becomes less; and for this reason it is economical to throw away some work by free expansion at each end of each stroke, for in so doing the total amount of work done per stroke is increased and the condensation, which is a total loss, becomes smaller in proportion."* This reasoning is applicable to expansion in the low-pressure cylinder, where condensation should be reduced to a minimum.

Terminal drop or free expansion tends to heat the steam. In other words, a loss of work is converted into a gain in heat. The highest economy is opposed to such a transfer. The required heat should be obtained from reheating coils placed in the receiver. Further, the heat so obtained should be applied to superheating dry steam, all water having been previously removed and sent to the boiler with the feed-water.

Ex. 117. Initial pressure 120 pounds absolute, clearance H.P. cyl. $2\frac{1}{2}\%$; cut-off $\frac{1}{4}$ stroke; clearance L.P. cyl. 5%; diam. of L.P. cyl. is twice that of the H.P. cyl. Vacuum 24"; piston speed 800 feet per min. Find the following quantities for a horizontal, cross-compound condensing engine of 2000 horse-power capacity:

(1) Give dimensions of each cylinder.
(2) Number of revolutions per minute.
(3) Size of pulleys on engine and shaft.‡
(4) Initial pressure in each cylinder.
(5) Terminal pressure in each cylinder.
(6) Mean effective pressure in each cylinder.
(7) Give the point of cut-off for economy.
(8) Draw cards from each cylinder for economy.
(9) Draw some cards with admission late—$\frac{1}{16}$ of the stroke.†

---

* Trans. A. S. M. E., Vol. XXI, p. 1006.

† See *Power*, page 622, 1907.

† See page 386.

CHAPTER XII.

REVOLUTION CONTROL.

THE work done by some machines is dependent on the irregularity of motion of some one of their parts. In a punching-machine, for instance, the rather constant and small pull of a belt is utilized to store up energy in a fly-wheel by increasing its revolutions. At the instant the punch commences to penetrate a plate, the demand for the pressure and work of detrusion is supplied instantly by the fly-wheel. The consequent loss of speed is made up in the time elapsing between the commencement of the rise and the commencement of the penetration of the punch.

The degree of uniformity of rotation exacted of steam-engines varies with their use. In the case of engines for certain electrical purposes and for cotton-mills, for instance, the closest possible approach to perfect uniformity is desirable.

Uniformity of rotation may be considered under two heads:

1. Uniformity in the number of strokes per minute.
2. " of rotation during the stroke.

It is evident that any governor controlling the pressure or volume of steam entering an engine has no control of the speed between the point of cut-off and the end of the stroke. The speed of an engine having badly set valves or a poorly designed governor may be incessantly changing, one stroke being made too fast and the next too slow, although the revolutions in a minute may be the required number. If the work done during one stroke is the same in amount as that done during the following one, then the amount of energy received (measured quite approximately by the weight of steam admitted) should be identical on each stroke. Uniformity of rotation requires the same mean effective pressure on both

strokes of the piston for a fixed position of the governing mechanism. The valves of an engine are not properly set until indicator-cards simultaneously taken from each end of the steam cylinder on the same revolution show the same mean effective pressure. In vertical engines this pressure must be corrected for the weight of the reciprocating parts.

No practical means of anticipating variation of speed have ever been devised. Hence momentary variation of speed has been used to actuate mechanism, that governs the incoming energy, to give practical uniformity of rotation within the limits set by the designer.

The principal methods of governing steam-engines are:

1. *Throttling.*—By regulating the pressure, but not the volume of the steam admitted to the engine.

2. *Variable Cut-off.*—By regulating the volume, but not the pressure of the steam admitted.

3. *Fly-wheels.*—By storing up surplus energy in such form that on demand it will be returned.

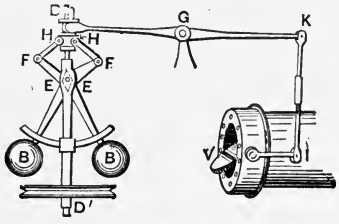

FIG. 168.

Throttling (Fig. 168).—If a circular disc be pivoted at any cross-section of a pipe, a more or less efficient and easy means of regulating the weight of steam that passes will be secured. A disc of this character arranged in a practical manner is called a butterfly valve or throttle. As the valve approaches its closing position the difference in the pressure of the steam on the two sides of the valve will be a considerable quantity. This difference of pressure is necessary to produce the high velocity of the steam in the contracted area of the pipe, and to overcome losses produced by friction and eddy-making. By placing a valve of this character close to the engine and moving it by some kind of auto-

matic mechanism we obtain a means of governing the speed of the engine under changing load.

Variable Cut-off.—We have already seen that, by changing the throw of a valve, the volume of steam admitted may be altered to comply with variations, either in the load or the boiler-pressure. The different mechanisms for doing this automatically will be discussed in this chapter.

Fly-wheels.—We shall find that the fly-wheel has very little influence on the constancy of the number of revolutions made in a minute. We must distinguish carefully between a rate and an actual quantity. When an engine has no governor, as in marine engines, if the load decreases (as it does when the ship pitches and the propeller rises in the water), there is an immediate increase in the velocity of rotation. Whilst a fly-wheel might absorb some of this energy, yet the amount absorbed would be trivial compared to the surplus energy constantly coming into the engines. In marine engines, if the increase of speed becomes dangerous the supply of energy is controlled by regulating the throttle by hand. In land engines the revolutions in a minute are controlled either by a throttling-governor or by a variable expansion-governor. The duty of the fly-wheel is then almost limited to securing uniformity of rotation during a revolution.

Fundamental Equations.—We must distinguish carefully between tangential and centripetal or centrifugal forces in revolving masses. If a mass is revolving uniformly it can neither exert any tangential force nor can any tangential force act on it unless such force is balanced by an equal and opposite force. Any unbalanced force means an accelerated or non-uniform speed. If there be any change of speed there is, on the contrary, a tangential acceleration that may be utilized in the production of force. On the other hand, in cases of uniform motion there is developed a force along the radius, called centrifugal force, that is utilized in nearly all forms of steam-engine governors. As we cannot have a pull on a string without the presence of two equal and opposite forces, so centrifugal stress (causing tension on the arms of the fly-wheel) requires two equal and opposite forces. A pull to the center is necessary to draw the particles from the straight line, that they tend to follow, into the curve of the circular path. The particles

exert an outward pull, and the arm exerts a stress in the opposite direction. Centrifugal force then is not a force acting along a tangent, but is the outward radial pull exerted by the particles, and produces its equal and opposite—centripetal force acting inwardly. The EQUALITY of centripetal and centrifugal forces only exists when there is NO motion along the radius. In the shaft-governor, for instance, the weight moves outwardly till the tension on the spring—representing centripetal force—overcomes the centrifugal force and tends to cause motion inwardly of the weight.

This demonstration is limited to the centrifugal force exerted by a particle revolving at uniform speed in a circle.

Let O be the center, R the radius, and ds the length of arc described in the time dt.

If $d\theta$ is the length of the arc at unit radius, then $Rd\theta = ds$.

$\frac{Rd\theta}{dt} = \frac{ds}{dt} = V$, the uniform speed in a circle.

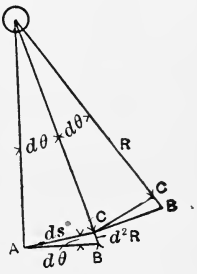

FIG. 169.

The acceleration along the radius may be taken as the difference between two successive velocities along two consecutive radii. If in each sector the origin is taken at the end of the left radius, we may take the velocity along the right radius as the acceleration. For example, the velocity along the radius OA is zero and the velocity along radius OC (found by drawing a tangent at A to intersect OC) is CB or $\frac{d^2R}{dt^2}$, so marked as acceleration is a second differential.

$ds\ d\theta = d^2R$, since the triangles OAC and CAB are similar.

But $$d\theta = \frac{ds}{R},$$

$$\frac{ds\ ds}{R} = d^2R,$$

$$\frac{ds^2}{Rdt^2} = \frac{d^2R}{dt^2} = \alpha_R,$$

$$\frac{V^2}{R} = \alpha_R = \text{acceleration along the radius.}$$

The force to produce an acceleration is equal to the product of the mass and the acceleration. Therefore

$$F=\frac{W}{g}\frac{V^2}{R}.$$

A body weighing W pounds revolving at a speed of V feet per second at R feet radius (gyration) will cause a centripetal force of F pounds per second.

Ex. 117. The student should show why F is elementary; is pounds and not feet.

Kinetic Energy.—If a body weighing W pounds is raised h feet, Wh foot-pounds of work are required. If this body is allowed to fall, the instant that it has passed over h feet Wh foot-pounds of work are stored in it. This energy of motion may also be expressed in terms of the velocity that it possesses at the instant of passing the point h feet below the starting-point. As $h=\frac{V^2}{2g}$ we have $Wh=\frac{WV^2}{2g}$. It is immaterial how a particle acquires the velocity V whether by falling or by the action of forces other than gravity. Hence if a particle in a fly-wheel is moving with a velocity of V feet per second, its kinetic energy is also $\frac{WV^2}{2g}$.

Ex. 118. Separate $\frac{WV^2}{2g}$ into its component parts, and show that it is essentially a compound quantity and is reducible to foot-pounds. Note carefully that any equation containing g (gravity) must have all linear dimensions in feet, and all measurements of time must be in seconds unless proper constants are used to effect the desired variation.

Fly-ball Governor with and without Central Rotating Weight.—Let AC be a rotating spindle carrying revolving balls B and B_1 and a heavy rotating weight of L pounds at C. Let the balls B, B_1, weighing w pounds apiece, be attached to links in such manner that if C move vertically upward to C', the linkage will now take the position $AB'C'B'_1$, shown in dotted lines.

By the action of two equal forces, P, P_1, exerted vertically at B and B_1, let the linkage attain the dotted position. Either analyt-

ically or graphically it will be found that if the balls B, B_1 move through a small vertical height (dh), the heavy weight L will move a greater height, $k(dh)$. The work put in must equal the work done.

$$\therefore\ 2P(dh) = 2wdh + Lk(dh).$$

$$P = w + \frac{kL}{2}.$$

If the upper and lower arms are of the same length, $k = 2$. The horizontal work will evidently be zero.

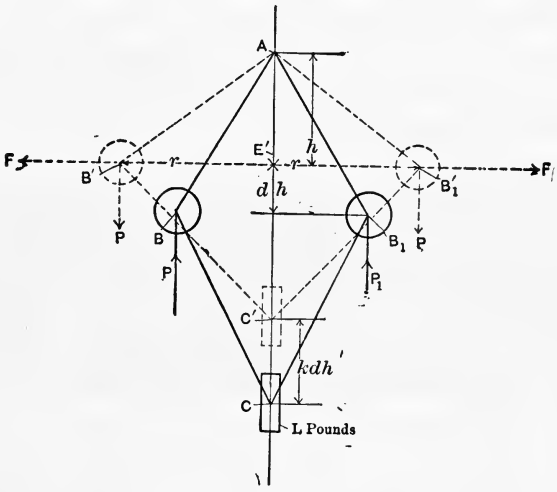

FIG. 170.

Let the mechanism shown be that of a loaded high-speed governor. Let centrifugal force F, acting along $E'B'$ and $E'B_1'$, keep the balls in the dotted position shown. Then, for the reasons above given, we have, taking moments around A, $Pr = Fh$, or

$$\left(w + \frac{kL}{2}\right)r = \frac{wV^2}{gr}h.$$

This equation contains apparently six variables, five of which must be given to determine the remaining one. Suppose $L = 0$.

This gives the equation of the simple pendulum governor,

$$wr = \frac{wV^2}{gr}h \quad \text{or} \quad \frac{V^2}{g} = \frac{r^2}{h}.$$

In this equation the weight of the balls B and B_1 has entirely disappeared. Hence, theoretically, if there were no such effects as friction and inertia, and if certain very necessary parts had no weight, we could use balls of any weight whatever. Practically, as there is considerable friction in valve-stem packing, as heavy parts must be given motion quickly and as connecting links have necessary weight, the balls are generally made of considerable weight, depending on the size of the governor and on the conditions under which it is to act.

In the above equation V is the velocity of the governor-balls in feet per SECOND; a more convenient equation for use in practice is one in terms of the number of revolutions that the governor-balls make per MINUTE $= N$. $\therefore V^2 = \left(\frac{2\pi rN}{60}\right)^2$.

$$\therefore N = \frac{60}{2\pi}\sqrt{\frac{g}{h}} \quad \text{or} \quad N^2h = 2936 = \left(\frac{60}{2\pi}\right)^2 g.$$

HEIGHTS AND SPEEDS OF GOVERNOR.

Revolutions per Minute.	Altitudes.		Revolutions per Minute.	Altitudes.	
	Feet.	Inches.		Feet.	Inches.
60	.815	9.76	200	.073	.876
80	.457	5.48	300	.032	.39
100	.292	3.50	400	.018	.22
125	.187	2.24	500	.012	.14
150	.13	1.56	600	.0075	.09

An examination of the table and the figure shows that the heights of the cones become very small and impractical at speeds much exceeding 80 revolutions per minute. This becomes more apparent when we remember that it is the difference in the height of the cones that affords the motion of the mechanism for closing the throttle. Thus, in changing from 80 to 85 revolutions a

minute, the difference in height of the cones is 1 inch; at 200 revolutions the cone height is only .88 inch, and the speed would have to reach 300 revolutions per minute to change the height .88 − .39 = .48 inch. These dimensions are entirely too small for any practical mechanism.

Referring to our fundamental formula, page 331, let $k=2$. This will be the case when the upper and lower arms are of equal length. Then

$$(w+L)r=\frac{wV^2h}{gr}=\frac{w(4\pi^2N^2)h}{60^2gr} \quad \text{or} \quad \left(\frac{60^2g}{4\pi^2}\right)\left(1+\frac{L}{w}\right)=N^2h.$$

$$\therefore\ 2936\left(1+\frac{L}{w}\right)=N^2h.$$

The relation between this formula and that for the simple pendulum is at once apparent. For simplicity, let the heavy central

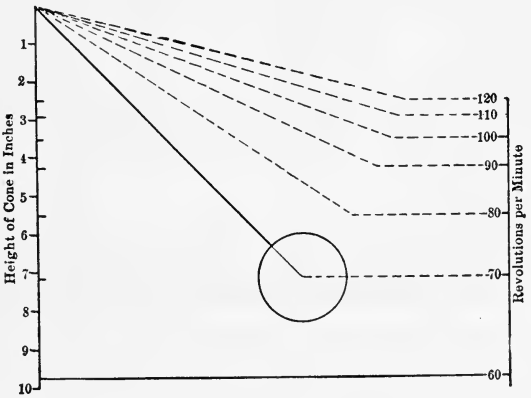

FIG. 171.

weight be nine times that of one of the balls, then the height of the cone will be ten times that of the simple pendulum. This makes this form of governor available in cases of governor revolutions ranging from 200 to 240 revolutions or higher.

Sensitiveness.—If N_1 is the highest and N_2 the lowest number of revolutions permitted by the governor, the sensitiveness is

expressed by $\frac{N_1-N_2}{\frac{N_1+N_2}{2}}$ = the range of speed divided by the mean speed. The *smaller* this fraction the more sensitive the governor. If N_1-N_2 becomes 0, the governor ceases to act properly from supersensitiveness.

For convenience let $2936 \equiv C_1^2$ and $\left(1+\frac{L}{w}\right)=C_2^2$.

Then for the loaded governor $\frac{C_1C_2}{\sqrt{h_1}}=N_1$,

$$\frac{C_1C_2}{\sqrt{h_2}}=N_2.$$

Subtracting,

$$C_1C_2\left(\frac{1}{\sqrt{h_1}}-\frac{1}{\sqrt{h_2}}\right)=N_1-N_2.$$

Adding,

$$C_1C_2\left(\frac{1}{\sqrt{h_1}}+\frac{1}{\sqrt{h_2}}\right)=N_1+N_2.$$

$$\therefore \frac{2\left(\frac{1}{\sqrt{h_1}}-\frac{1}{\sqrt{h_2}}\right)}{\frac{1}{\sqrt{h_1}}+\frac{1}{\sqrt{h_2}}}=\frac{N_1-N_2}{\frac{N_1+N_2}{2}}.$$

We would obtain the same expression for the sensitiveness of an unloaded governor. It is therefore evident that their sensitiveness is identical if their cone heights h_2 and h_1 are identical. The greater inertia of the loaded governor makes it the more sensitive, as it overcomes friction the more readily.

Practical Forms of Fly-ball Governors. — The pendulum-governor takes many shapes and different qualities are possessed in varying amounts by the different forms. Fig. 172 illustrates a Proell governor. It consists of a hollow vessel, G, fixed to the rotating shaft, R, and possessing two projecting ears, E, which in turn provide pivots, D, for the bent lever-arms L. The rotation

of the shaft is conveyed to the balls through G, E, and L. As the balls, B, B', fly out, the inner ends of the bent lever L press downward on a plate resting on the spring S. The motion of the balls results in the motion of the sleeve, U, whose motion in turn is used to actuate a lever or other mechanism.

It is evident that the centrifugal force of the balls increases, as they fly out, on account of the increasing radius from the spindle

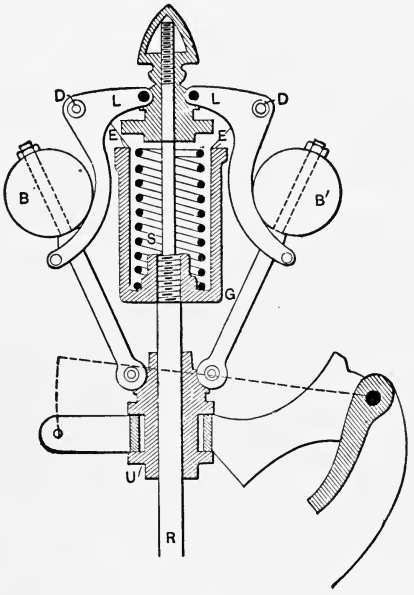

FIG. 172.

R, as well as from their increased revolutions. The compressive resistance of the spring S opposes the outward motion of the balls.

Three cases may arise:

1. The compressive resistance of the spring may increase in exactly the same ratio that the centrifugal force exerted by the balls increases.
2. It may increase less rapidly than the centrifugal force.
3. It may increase more rapidly than the centrifugal force.

In the first case it is evident that the balls will maintain their lowest position until the spindle R attains some fixed speed. The

slightest increase over that speed sends the balls to their extreme outward position, which shuts off steam entirely. The consequent decrease in speed is followed by the return of the balls to the lowest position and the steam-valve is opened wide. This continual fluctuation is called hunting. The governor is said to be in neutral equilibrium, unstable, astatic, or isochronous. Theoretically, the governor has only one speed (hence isochronal) for all positions of the balls; the equilibrium is not stable, hence the other terms. The sensitiveness is evidently too great.

If we substitute another spring whose resistance on compression increases less rapidly than the centrifugal force, we have an arrangement that will not regulate at all—not even badly—for the balls fly to their limit and shut off steam before the engine reaches the desired number of revolutions.

Let us substitute, then, a spring whose compressive resistance increases with its diminishing length, only a trifle more rapidly than the corresponding increase of the centrifugal force of the balls, due to their increasing radii of action, *the revolutions being kept constant at the lower fixed rate.* If the speed of an engine is to vary from 180 to 182 revolutions, the spring is stronger than the centrifugal force at 180 revolutions for corresponding lengths of spring and radius of action of the governor-ball. But at any speed higher than 180 revolutions there are positions of momentary equilibrium. These moments are followed by decreased speed, as the steam-supply has been diminished for the following stroke.

It is desirable that governors approach, but not arrive, at isochronism, since oversensitiveness practically produces more irregularity in the motion of an engine than that arising from a predetermined variation from perfect uniformity of rotation.

There are other methods of obtaining isochronal motion. $N^2h=2936\left(1+\frac{kL}{2w}\right)$. For any given governor the only variables in the above fundamental equation are N and h. If the governor is so constructed that h is constant for different radii of action of the balls, then N becomes constant also. For example, three different simple pendulum-governors having the same cone height AC, but the lever-arms of different lengths as shown, would all revolve in the same time, for, in that case, $N^2h=2936$. Hence if in a

governor the arm AB could lengthen out as shown, the motion would be isochronous.

A practical method of obtaining the above motion quite ap-

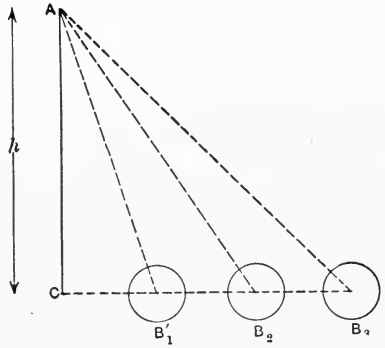

FIG. 173.

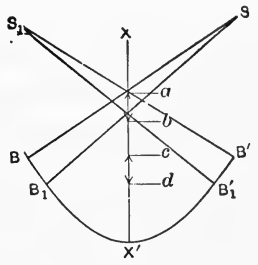

FIG. 174.

proximately is found by crossing the arms of the governor-balls and making use of auxiliary arms, so that the balls in ascending describe an approximate parabola instead of the circle.

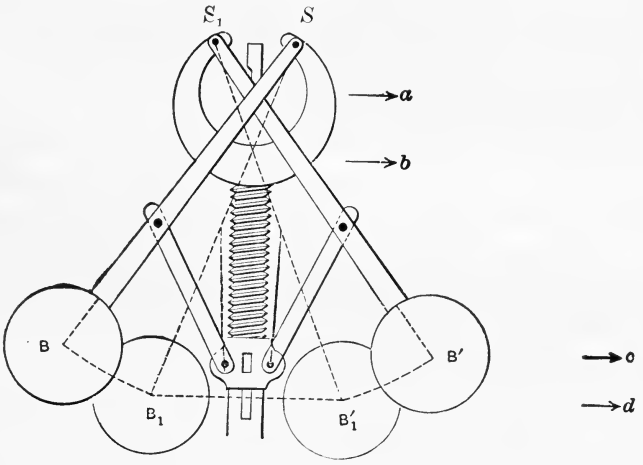

FIG. 175.

On the axis XX' of Fig. 122 lay off a parabola as shown. Draw the ordinates BB' and erect the normals BS and $B'S_1$. Draw a parallel ordinate B_1B_1' and erect normals as before to

intersect the other normals in some points S and S_1. It is a property of the parabola that the subnormal $ac=bd$. The cone height being constant, a governor operating on these lines would be isochronal.

A practical form of this governor is shown in Fig. 175. By choosing the points S_1, S' so that the subnormal slightly increases, a stable governor is obtained; if, however, the subnormal decreases, the governor would be unstable.

Power of a Governor.—There is a certain amount of work done in raising the weights of a governor, which is given out again on the descent of the weights. This work is called the power of the governor and is equal to the two vertical forces that are necessary to raise the weights multiplied by the range of elevation in feet, or twice the mean centrifugal force of each ball multiplied by the difference between the maximum and minimum radius.

$$Fh=Pr, \quad \therefore \; F=\frac{Pr}{h}=\frac{Pr}{\sqrt{l^2-r^2}}.$$

$$\int Fdr=\int\frac{Prdr}{h}=P\int_{r_1}^{r_2}\frac{rdr}{\sqrt{l^2-r^2}}=-P(h_1-h_2).$$

By laying off the values of F for various radii as ordinates with the radii as abscissæ, an area is obtained that expresses graphically the integral of Fdr for one ball. For a Porter loaded governor with equal arms, if $L=9w$ the power of the governor will be ten times that of a simple governor for the same variation in the height of the cone. Liability of the governor sticking as the engine slows down is diminished by increasing the power of the governor.

Friction of a Governor.—Hitherto we have neglected friction in the joints of the governor mechanism, friction of the valve-stem packing, unbalanced steam-pressure, and the friction of the valve itself. But little consideration is necessary to show that all these resistances should be reduced to a minimum if a sensitive government of the steam is desired. It is better to let a little steam leak from the valve-stem packing than to tighten up the gland so tight that the governor acts irregularly. A method of measuring the total amount of these resistances in pounds will now be given.

In the general formula (page 331) $Pr=Fh$, if r and h remain constant we have $\frac{P_1}{P_2}=\frac{F_1}{F_2}=\frac{N_1^2}{N_2^2}$; in other words, the centrifugal force varies with the square of the revolutions and P varies with the centrifugal force.

Supposing all parts of the governor mechanism are in their proper position when N_1 revolutions are being made, but that they do not move until additional centrifugal force due to N_2 revolutions is generated, it is evident that the friction is measured by F_2-F_1 or by P_2-P_1. From the above equations we have $\frac{P_2-P_1}{P_1}=\frac{N_2^2-N_1^2}{N_1^2}$. Hence the frictional resistance of one ball $=p=P_1\frac{N_2^2-N_1^2}{N_1^2}$, or the total friction $=2P_1\frac{N_2^2-N_1^2}{N_1^2}$.

Valves for Short Cut-off.—The common slide-valve with a fixed eccentric is not used to cut off steam at less than 5/8 stroke. On constructing a valve diagram one sees at once that with a constant maximum port-opening the steam-lap, and consequently the valve-travel, become impractically large if a shorter cut-off is attempted. With simple engines the economical cut-off, using steam-pressures varying from 80 pounds to 120 pounds per square inch (gage), varies from 1/4 to 1/7 stroke. To obtain this result the following mechanisms have been used:

1. Adjustable eccentrics.
2. Links, by the use of which the greater or less valve-travel depends on two eccentrics, as in the Stephenson link.
3. An independent valve driven by a separate eccentric and moving on an independent valve-seat over the main valve. A true representative of this type, the Ganzenbach or gridiron valve, is no longer used. We shall describe a modified type—the Buckeye valve.
4. An independent valve riding on the back of the main valve—Meyer valve.
5. Tripped valves of the Corliss type.
6. Poppet-valves driven by cams used in connection with superheated steam.

Adjustable Eccentrics.—Instead of fitting and keying the eccentric to the shaft, let us attach the eccentric to the arms of a

fly-wheel which is keyed to the shaft. Any rotation of the shaft will then cause exactly the same movement of the center of the eccentric as would have been caused if the eccentric had been fastened directly to the shaft. It will be seen, however, that this method of attachment allows us to change not only the angular advance, but also the throw of an eccentric. Fig. 176 shows a swinging eccentric with ears X and X' cast on the front edge of an

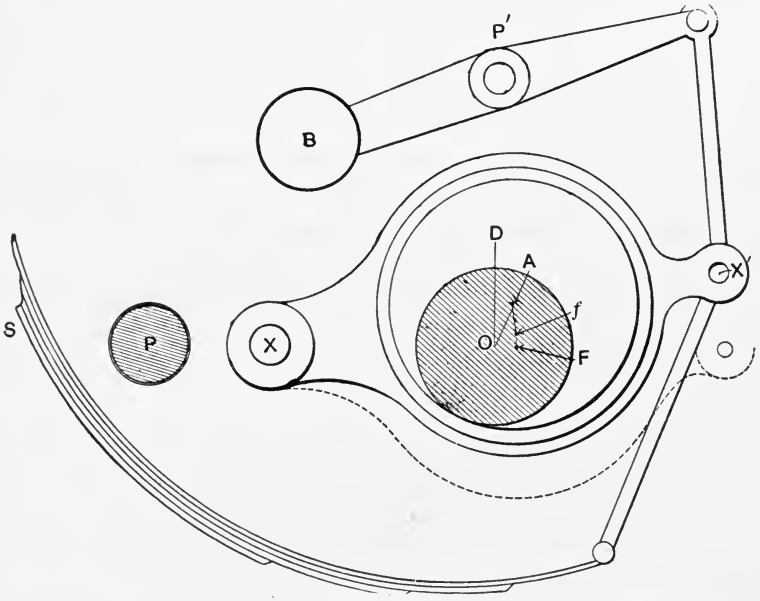

FIG. 176.

eccentric, leaving the rim to be encircled by the eccentric-strap as usual. The fly-wheel is supposed to be in front of the eccentric, and is omitted to avoid confusing the diagram. The eccentric, reduced to a ring-like form, fits the shaft so loosely that it may readily be swung around X as a pivot, thus causing the center of the eccentric to swing through the arc AfF. If P is the center of the crank-pin, it will be seen that this increases the angular advance DOA to DOf, and shortens the throw of the eccentric from OA to Of when the center of the eccentric is moved from point A to point f. If X' is held rigidly in this new position, then the valve motion will be that due to an eccentric having the new throw Of and the new angular advance DOf. In Fig. 176, S, P', and X are

fastened rigidly to the fly-wheel, which is keyed to the shaft O. If B moves about P' (from centrifugal force), the eccentric center A will move in the arc AfF.

Keeping the center of the crank-pin as it is in the figure, it is evident that the arc AfF will vary with the radius XA and the position of the center X. If XA be made longer the arc becomes flatter; if XA be infinite in length or a construction is used that produces the effect of an infinite rod, the arc becomes a straight line perpendicular to the line joining the center of the shaft and the center of the crank-pin. This may be called a shifting eccentric,

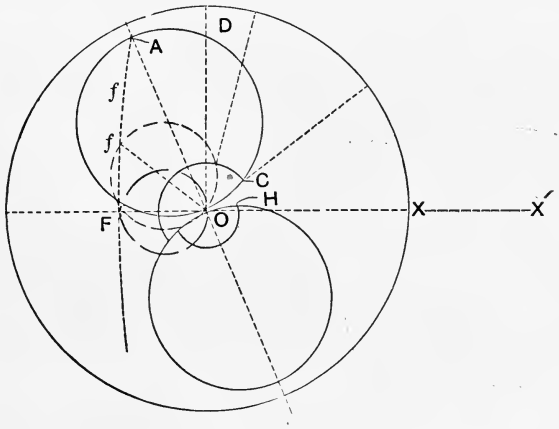

FIG. 177.

to distinguish it from one that swings. If X' is made the pivot and X the moving center, the curvature of AfF is reversed. The effect of these changes of the position of the center X and of the length of the arm XA may be readily determined from the valve diagram.

The student should draw a number of complete diagrams, including the indicator-cards to scale, keeping in mind that the steam- and exhaust-laps are constant (Fig. 177). Lay off negatively an angular advance DOA. With the maximum throw of the eccentric OA ($4 \times OA$, Fig. 176) as a diameter construct on OA (and OA produced) valve-circles. With steam-laps OC and exhaust-lap OH construct steam- and exhaust-lap circles. With a

center on OX produced if necessary (to the right in this case) and a radius $X'A = 4XA$ (Fig. 176) construct an arc $AffF$. Join O and any point f and construct on Of and on an equal prolongation valve-circles; they will be the valve-circles for the new throw and new angular advance. Note the effect on—

1. The crank-angle of admission.
2. The amount of steam-lead.
3. The point of cut-off.
4. The crank-angle of exhaust-opening and exhaust-lead.

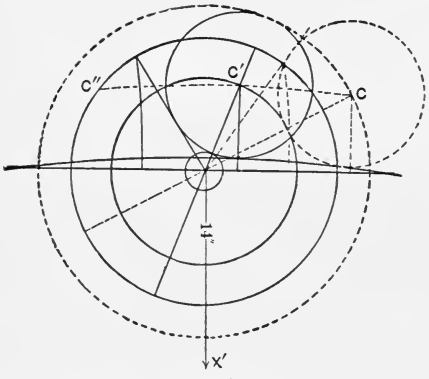

Fig. 178.

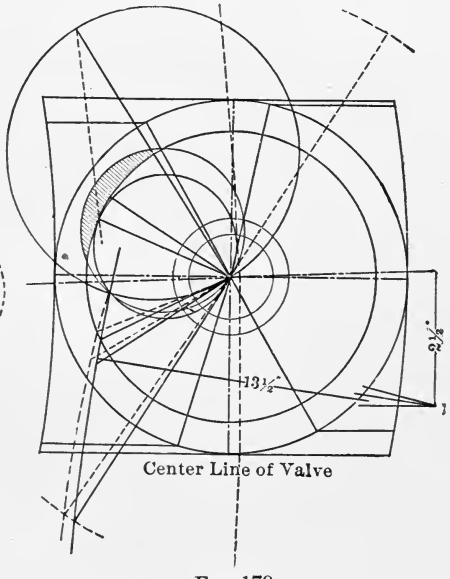

Fig. 179.

Fig. 178.—Diagram from a 12″×12″ engine. 250 revs. per minute, width of port 1″, length of port 9″, steam-lap ¾″, exhaust-lap 0, $L/R = 6$; center about which the eccentric swings is distant 14″ from the center of the shaft.

Fig. 179.—Diagram from Straight-Line engine 11″×14″. 275 revs. per minute, width of port ¾″, length of port, 1¾″ crank end, 1⅝″ head end; exhaust-lap, crank end $\frac{3}{64}$″, head end $\frac{1}{32}$″; eccentricity varies from $1\frac{5}{64}$″ to 2½″; steam lead −.04 at quarter cut-off. (Klein's Steam-engine.)

5. The crank-angle and piston position of exhaust-closure.
6. The work of compression.
7. Note the effect of choosing the center X' above and below the line OX'.
8. Note the effect of sliding the eccentric in guides so that the center of the eccentric moves in a vertical line through A.

9. Note the position of the point X' in the diagram and on the fly-wheel.

10. Note the effect of interchanging the position of the fixed and moving pivots.

The general effect of increasing the angular advance and decreasing the throw of the eccentric is to hasten all events, viz., steam opening and closing, exhaust opening and closing, and to decrease the maximum port-opening very materially. In high-

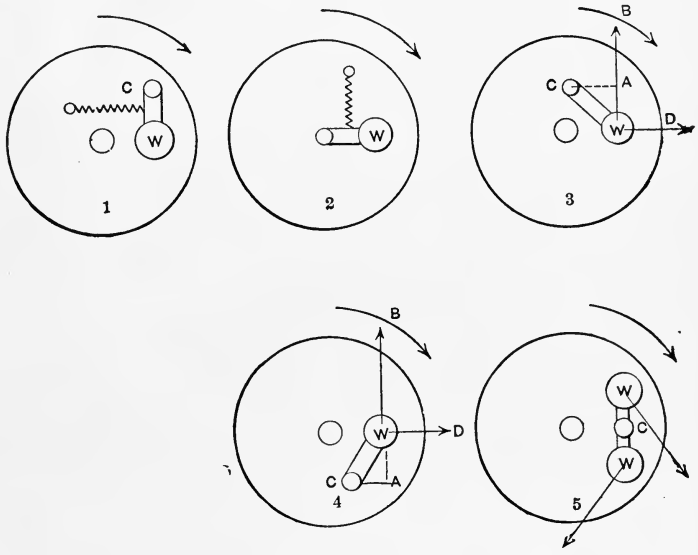

FIG. 180.

speed engines cutting off at $\frac{1}{4}$ or $\frac{1}{5}$ stroke this port-opening requires the use of 360,000″ for the factor F in the formula $a = \frac{ALN}{F}$ (see page 109). The effect on the lead varies with the position and distance of the center X' from the point A.

The Bilgram diagram may be equally well used for the determination of the effects of swinging the eccentric center through an arc. The center X' of the arc $CC'C''$ is, in this case, at right angles to its true position in the engine. (See Fig. 178.)

Shaft-governors.—As in the pendulum type of governor, there is no action in the fly-wheel type of governor except with non-uniform rotation. As long as the engine is revolving uniformly the

centrifugal stresses are balanced by the pull of a spring of some description, and there is almost complete static equilibrium, viz., there is no motion of the parts relative to one another. With the slightest change in speed not only is there an unbalancing of the centrifugal or radial forces, but new forces producing tangential acceleration and angular acceleration may be brought into existence.

In Fig. 180, if disc 1, representing a fly-wheel, rotate in the direction of the arrow, being driven from a shaft, center at O, the weight W, center at C, exerts a radial or centrifugal stress along OW that is resisted by the pull of the spring. If the speed increases the radius OW increases until the pull on the stretched spring equals the centrifugal force of W with its increased radius. The movement of W outwardly or inwardly is utilized, by appropriate lever-arms not shown, to move the adjustable eccentrics already described (Fig. 176).

Suppose the weight W were centered as in 2. No such radial motion is possible, since the arm OW is not a spring. But suppose that disc 2 is suddenly stopped. The weight W being pivoted at O is unimpeded and will continue its motion. To stop it a tangential force must be exerted in a direction opposite to its motion in a tangential direction.

In 1, as long as WC is perpendicular to OW, all tangential stress is taken by the pin C, and motion, due to tangential stress *alone*, is impossible, but if the centrifugal force throws the weight W so that the arm WC is no longer perpendicular to OW, as in 3 and 4, the motion will be due to a combination of the centrifugal and tangential forces.

The tangential force may either increase or decrease the centrifugal force. In 3 the weight precedes the pivot, but in 4 the pivot precedes the weight, hence, while the disc in each case is revolving clockwise, the effects of the tangential force are opposite. If the speed of 3 is increased, the inertia of the weight produces a force, acting in the direction WB, which tends to increase the radius OW; whereas if the disc slows down the tangential force then tends to decrease OW. In both cases the tangential effect has aided the centrifugal effect and hence made the governor more sensitive. The opposite effect is seen in 4.

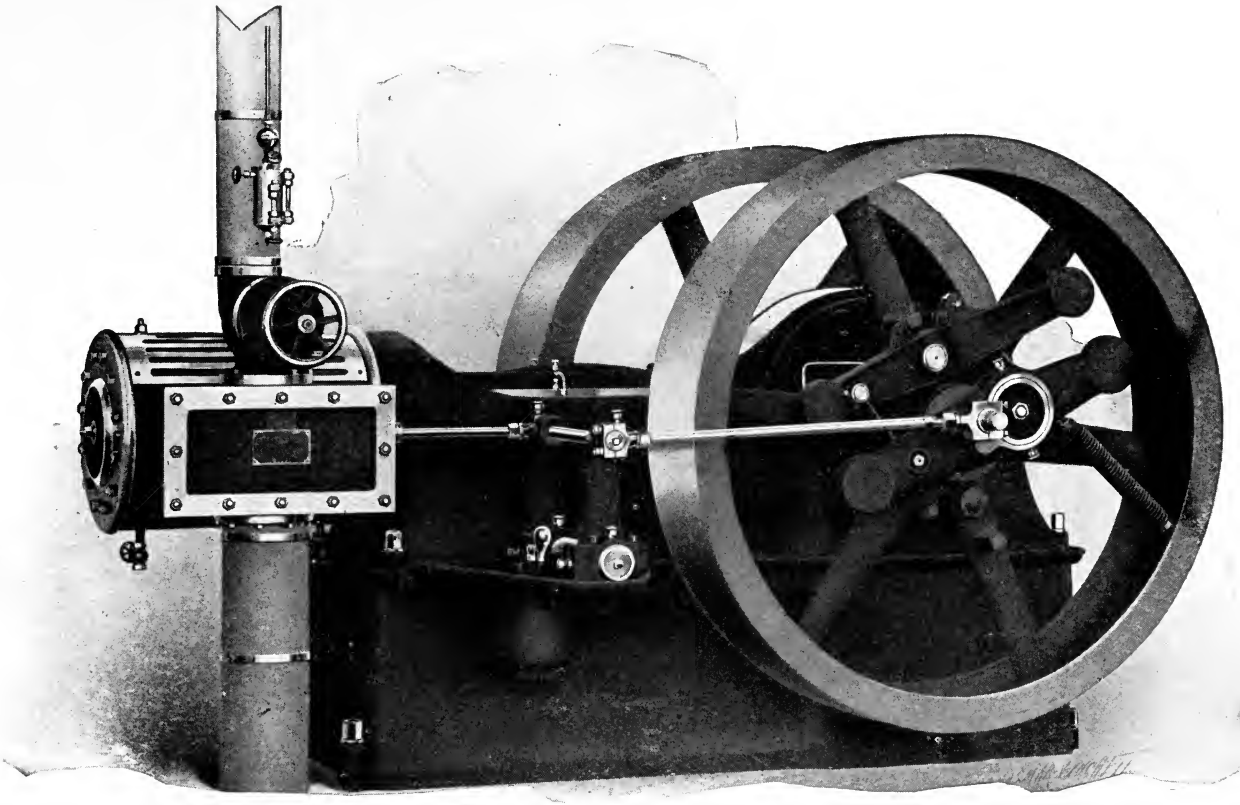

FIG. 181.
(American Ball-engine Company.)

The amount of this tangential force is equal to $\frac{W}{g} \times$ the tangential acceleration, and its moment is equal to the product of the above force and its lever-arm CA. Theoretical calculations give an approximation to required quantities, but the final results are obtained only by setting the engine up and running it at speed and varying the tension of the springs by trial.

Angular Acceleration.—Another method of using tangential force is shown in 5. Suppose two weights are connected by a bar pivoted in the middle to a fixed or component part of the fly-wheel. If the latter slows down, the inertia of the revolving weights causes them to set up a rotation around the pivot C in the direction of the arrows. On the other hand, an increase of velocity of rotation of the fly-wheel will cause rotation in the opposite direction. The rotation around the pivot C is said to be caused by "angular inertia."

Springs.—If to the above forces we add the force of gravitation, we have the principal forces that are opposed in fly-wheel governors by either leaf springs, as shown in Fig. 176, or helical springs, as shown in Fig. 181. The strength of helical springs depends upon a number of variables, among which are the modulus of elasticity of the wire, diameter of the wire, the helical angle, number and radius of the coils.

The springs may be wound so that their resistance is exactly proportional to the stretch or to some increasing ratio. As in the pendulum type, the centrifugal force increases directly with the radius of the circle described by the center of gravity of the fly-weights, and if the stress in the spring increases exactly in the same proportion, the fly-weight will oscillate from its innermost to its outermost positions. It is then truly isochronal and supersensitive and therefore useless.

The tension of the spring must increase slightly faster than its rate of elongation, more especially since, with a variation from uniform velocity, other forces are brought into play and must be counteracted. On the other hand, the variable friction of the valve and its stem, the friction of all the joints of the governor mechanism and the difference between the friction of rest and the friction of motion must be considered.

In Fig. 181 is shown the governor of the American Ball-engine.

In this design are used two pivoted parts, both of which use angular inertia. The smaller bar is pivoted wholly with regard to the best location of the pivot for centrifugal force, and is controlled by the help of the spring. The larger bar is located so that its center of gravity practically coincides with the center of the shaft, and "is pivoted at the most desirable point for determining the path of motion of the valve actuating pin." The parts are so arranged that a complete gravity balance exists in every position of the wheel. "In many cases the total departure from normal speed, with the whole load thrown on or off suddenly or gradually, does not exceed the space between two arms of the wheel, or one-sixth of a revolution, which at 300 revolutions per minute is 1/18 of 1%."

Inertia Governor.—The inertia governor designed by F. M. Rites is used on the engines manufactured by over one hundred firms. Originally designed for high-speed engines, it is now used on medium-speed four-valve engines and is displacing the revolving pendulum governor of the Corliss type.

A hollow, flattened, dumb-bell-shaped bar or weight (Figs. 212, 213) is fastened on one end of a spindle, *s*, that may oscillate through a small angle in a bearing in the hub of the fly-wheel. If an eccentric, *E*, is used it is fixed to the other end of the spindle. The position of the latter must be such that the total allowed rotation of the weight or bar from its position when the engine is at rest will shift the eccentric from its position of maximum throw at *A* to that of minimum throw (= steam-lap) at *B*. Instead of an eccentric (with its considerable weight, inertia, and friction) an eccentric pin is used in many designs. Necessarily this must be an overhung pin, so that its rod may clear the shaft.

The angle of rotation (in the arc *gG*) of the weight around the axis of the spindle (through the action of centrifugal and inertia forces) is governed by the action of the spring *z*. The tension of this spring may be regulated by a nut at *z'*, and the length of its lever-arm *cd* may be altered at *z''*.

While the weight is designed to look symmetrical with regard to the shaft, as a matter of fact the end to which the spring is attached is the heavier. The center of gravity of the rotating weights (the bar-weight, the eccentric, eccentric strap, and the strap end of the eccentric rod) is at some point *G*. To determine

the effect of the weight due to its inertia, consider it as two weights concentrated at G_1 and G_2. If the engine slows down, these tend to spurt ahead, rotating the spindle and therefore the eccentric in the direction required to give increased travel to the valve. The diminished centrifugal force of the weight considered as a single mass concentrated at G tends to produce a similar motion of the eccentric. If the engine speeds up, the opposite effects are produced. Hence we may say that in all cases the centrifugal and inertia forces act together in increasing or decreasing the engine speed.

As the force of inertia acts only at change of speed, when running at theoretical constant speed the forces acting on the governor may be grouped under four heads:

1. Centrifugal force.
2. Tension of the spring.
3. Gravity.
4. Force exerted through the valve-rod.

Constant speed would only be possible if the sum of the *moments* of these forces around the valve-spindle was zero at all parts of a revolution. A more exact analysis will be given later.

Practical Hints.—If an engine runs unsteady, ascertain if it ever ran satisfactorily or if the unsteady running occurred after making repairs, overhauling, cleaning, or setting up any part of the engine, such as the packing, journals, dash-pot, springs, etc. Examine the steam-valve for leakage or undue pressure, the steam-piston for undue leakage or tightness, the governor for misplaced weights or undue friction.

By means of a brake or a water-rheostat run the engine at one-third of its rated load. If the engine speed is steady but too low, tighten the spring. If the spring has already been set up to the limit, remove any attached weight from the short end of the bar G_1, or cut out one or two coils from the spring.

In making any alterations in the governor the following general principles must be kept in mind:

Any alteration that increases the mass at G_1 or increases its radius tends to increase its centrifugal force and tends to slow the engine down. The same results follow from weakening the spring or decreasing its arm.

It is evident that fine adjustments are possible by changes

whose effects partially offset one another. The best results in steadiness are obtained when the no-load speed is about 2% higher than the full-load speed. Therefore the tension of the spring must increase a trifle more rapidly than the increase in the centrifugal force of the mass due solely to its increase of radius, i.e., at constant speed.

If at change of load the governor exhibits the phenomenon called hunting, try the effect of adding a small weight to the lower weight G_2, if there is no trouble due to carelessness, such as sticking at the pin from dirt or scoring. Hammering at the stops on starting and stopping may ordinarily be avoided by either increasing or decreasing the attached weights either at the spring end or at both ends.*

In order to operate successfully the modern high-speed shaft-governed valve it is necessary to reduce the friction of the valve and its stem to a small and constant quantity. The work of friction is reduced by—

1. Removing the pressure from the valve.
2. Diminishing its travel.

The first is accomplished by balancing the valve or using self-balanced valves. The valve is balanced by working it between parallel scraped plates (Fig. 183), so that the steam does not get to the back of the valve. In piston-valves (Fig. 182) the pressure due to the steam is balanced, leaving the friction of the packing-rings to be provided for.

The travel of the valve is diminished by the use of double ports or by the use of auxiliary passages in the valve. In the Allen or Trick valve (Fig. 183) the steam enters the cylinder not only directly past the valve-edge, but also through a port-passage in the valve itself.

Draw the Zeuner or Bilgram diagrams for the following examples.

Ex. 119. Width of port, 5/8 in.; length of port, 12 in.; steam-lap, 9/16 in.; exhaust-lap: head end $-1/8$ in., crank end 0 in.; $L/R=6$; eccentric-arm infinite; engine, $14''\times20''$; 210 revolutions, double-ported.

Ex. 120. Width of port, 1 in.; length, 9 in.; steam-lap, 3/4 in.; steam-lead increases from 1/16 in. to 1/6 in. at maximum cut-off;

* See Power, Nov., 1906.

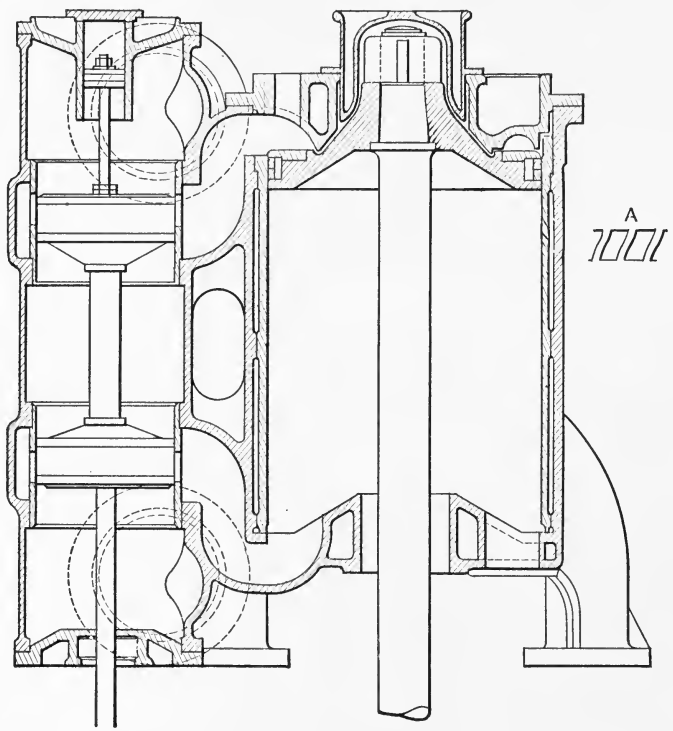

FIG. 182.

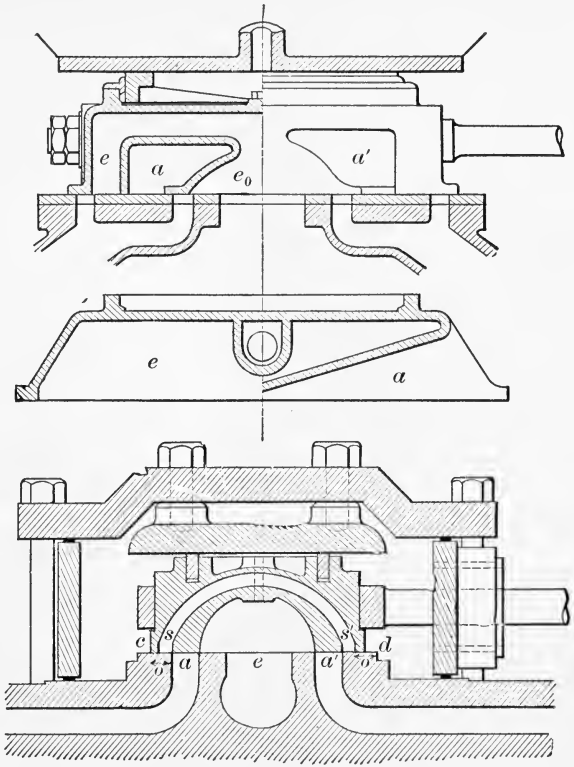

FIG. 183. (From Peabody's "Valve-gears.")

length of eccentric or swinging arm, 14 in.; its center is on the line of centers of shaft and crank-pin when the latter is on a dead-center.

Ex. 121. Width of port, $1\frac{5}{8}$ in.; length, 8 in.; $9'' \times 10''$ engine; 300 revolutions; steam-lap, 1 in.; exhaust-lap, 5/16 in.; throw of eccentric varies from $1\frac{37}{64}$ to 1 in.; length of swinging arm, $6\frac{1}{4}$ in., and its center is 5/8 in. below the line of centers of the shaft and crank-pin when the latter is on its dead-center.

Ex. 122. What change would be made if the valve took steam on its inside edges instead of the outside?

Ex. 123. What changes would be made if the eccentric drove the valve through a reverse-lever?

Ex. 124. Could this reverse-lever be designed to give equality of cut-off and equal lead at the important point of cut-off with equal steam-laps?

Link Motion.—The Stephenson link is in common use in this country and in England, whilst on the Continent the Gooch link is preferred. The former will be the only one described (Fig. 184).

The Stephenson link is most generally used on locomotives and marine engines, as it gives not only a convenient means of reversing or running the engine backwards, but also affords, when carefully designed, a fairly efficient means of economizing steam by affording a variable cut-off (Fig. 185).

This link consists in a going-ahead and a backing eccentric with their rods and a link. The eccentrics as a rule have equal throws and are placed at equal angles ahead and behind the crank. The eccentric-rods are attached by link-pins, P, P', to the link either at or near its ends. The length of a rod is the distance from the center of its link-pin to the center of its eccentric. When the link is in full gear, either ahead or backing, the valve receives its motion from one eccentric only. As the link is shifted from that position to those nearer midgear, it receives less motion from that eccentric and more from the other one. At midgear it is affected equally by the eccentrics. As the gear is shifted towards the other full gear, the influence of the first eccentric becomes less and less and that of the second greater. It will be shown that the effects on steam distribution caused by the change of valve motion produced by this movement of the link are the same as those produced by a swinging eccentric.

On locomotives, owing to the relative positions of the valve (above the cylinder and outside the driving-wheels) and the eccentrics (on the driving-axle and inside the driving-wheels) a rocker BTA is necessary (Fig. 185). To prevent the reversal of the valve motion the eccentrics must follow the crank. Hence, if the crank is at C the center of the go-ahead eccentric is at E, and the

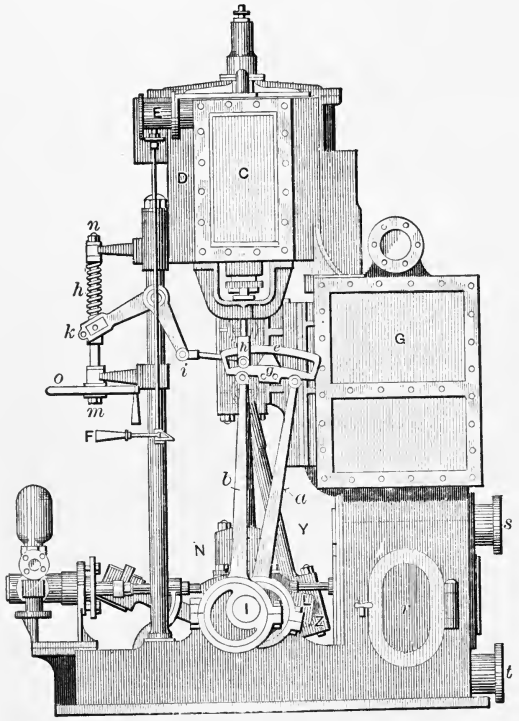

FIG. 184.—Marine Engine.

center of the backing eccentric is at E'. The link-pins P and P' are behind the link; the saddle-plate m_0 is dished to pass over the link-block, B, when the link is raised to bring the eccentric, E', into full gear. The link is suspended on one side by the hanger rm_0 from the bell-crank RSn keyed to the reverse-shaft S. The reach-rod, attached to SR at R, is actuated from a reversing lever in the cab. The link shown is a slot link.

A lighter and better construction is shown in Fig. 186. In this case the link receives and delivers centrally the stress due to driving

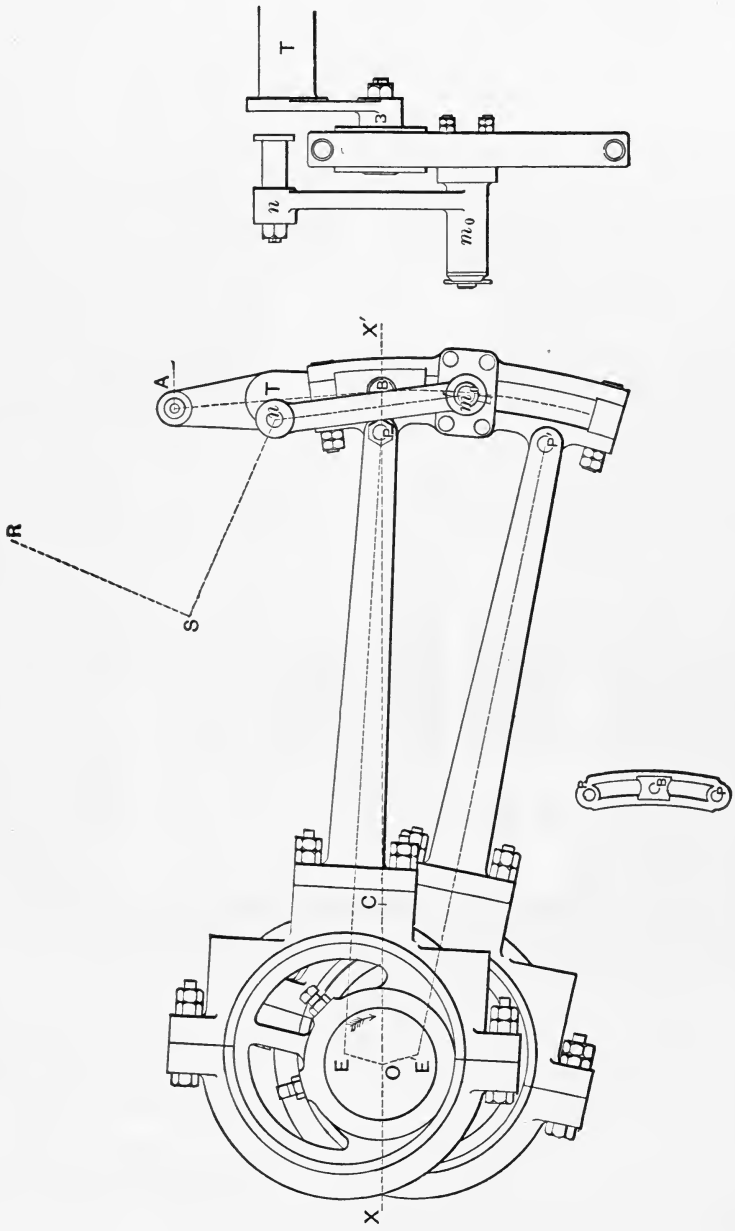

FIG. 185.—Stephenson Link. (From Peabody's "Valve-gears.")

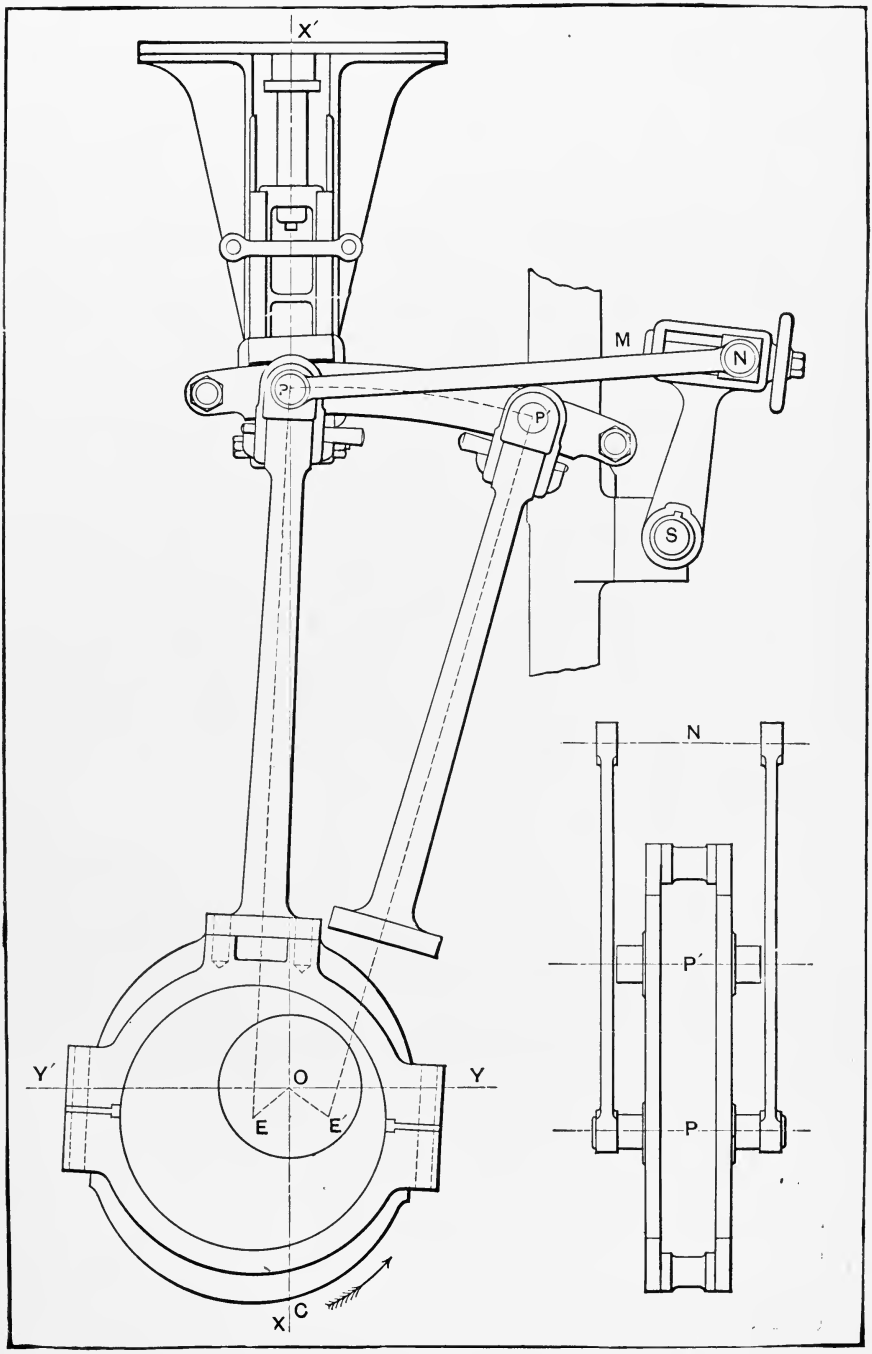

FIG. 186.—Stephenson Link. (From Peabody's "Valve-gears.")

the valve. In other words, the axis of stresses in the valve-stem and in the eccentric-rods coincides with the axes of those rods. The figure also illustrates another form of link called the side-bar link. The position of the link-block is adjustable to vary the cut-off by means of the screw M actuating the bridle NP. This is often desirable in regulating the distribution of power between the cylinders of compound and triple-expansion engines. By rotating the reverse-shaft, S, however, the link may be thrown over or reversed independently of the position of the screw M.

To shift the link there are required (Fig. 185) a reverse-shaft, S; a bell-crank, RSn; and a suspension-rod, nm_0 (also called a hanger or bridle), attached to the saddle-pin, m_0. The motion of any theoretical point on the theoretical link arc (shown dotted) is due to the motion received from the two eccentrics and from the connection of the link to the suspension-rod, or hanger. The curve made by any such point is generally some irregular form of the figure 8, the loops differing in shape and size. To provide for this motion a link-block carrying a pivot pin B is used. We must distinguish, then, between a point on the theoretical link arc and a point on the axis of the pivot-pin of the block, which coincide exactly in position only at the time the crossing-point of the loops of the figure 8 is made. At other times the link-arc point has slipped by the point in the block by the half-breadth of the loop. This motion of the link relative to the link-block is called the slipping or slotting of the block. In Fig. 186 the link-block point must move only in a straight line, since the block is directly connected to the valve-stem; in Fig. 185 the link-block pin moves in the arc of a circle about T with a radius BT. A pivot connection is necessary in each case, on account of the slight rotation of the block about its axis.

Open and Crossed Rods.—It is necessary to distinguish between open and crossed rods. This is not so simple as it appears, since in what is called open-rod construction the rods become crossed during a revolution and then open again. Similarly the crossing apparently disappears in crossed-rod construction. In taking an engine apart, care must be taken, on reassembling the parts, not to convert a crossed-rod construction into an open-rod construction, or vice versa, as the steam distribution will be so altered that the

engine will not turn over. This mistake is frequently made in overhauling steam-launch engines.

To decide whether eccentric-rods are crossed or open, we must first determine whether the connection is direct or indirect. In direct connection the link-block must drive the valve-stem directly and the steam must be controlled by the outside edges of the valve.

In indirect connection the valve is either driven by a rocker or the link-block drives the valve-stem directly, but the steam is controlled by the inside lap of the valve.

For direct connection (Figs. 187 and 188) put the crank on the dead-center away from the link. If the rods are open, the open-

FIG. 187.

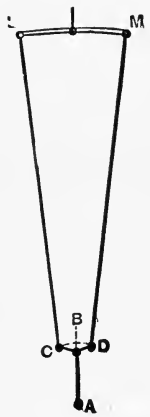

FIG. 188.

rod construction is used. If the rods are crossed, crossed construction is used.

For indirect connection put the crank on the dead-center toward the link. In open-rod construction the rods will be open, and they will be crossed in a crossed-rod construction. By revolving the crank through 180°, the diagrams will show that open rods become apparently crossed and vice versa.

Considerations Affecting the Design of a Link-motion.—The design will vary in accordance with the importance of the following considerations:

1. The link-motion is to be used practically only for reversing, as in marine engines.

2. The link-motion is not only to be used for reversing and giving a variable cut-off, but is to be much used at an important cut-off.

3. The link-motion is to be used as frequently in the backing as in the go-ahead position, as in hoisting-engines, switch-engines.

4. The importance of reducing slip at an important point of cut-off.

5. The importance of having equal cut-off on both strokes at the important point of cut-off. Any inequality at short cut-off affects the regularity of rotation more at short than at long cut-off, as the percentage of power difference is greater.

6. The available places of locating the reversing-shaft.

7. The importance of reducing or increasing lead as the link is shifted towards midgear.

The quantities affecting these considerations are:

1. The position of the axis of the saddle-pin.
2. " " " " reverse-shaft.
3. " length of the hanger, eccentric-rods, suspension-rod.
4. " use of crossed or open rods.
5. Whether or not rocker-arms are used.

Whilst it may be easy to design a link-motion that will work, much care and skill is required in obtaining the best possible solution. In locomotive works not only are full-sized drawings made, but full-sized models are frequently used in the endeavor to obtain the best design. In marine work the problem is simpler, but in many cases that which is desirable cannot be obtained on account of the interference of other practical considerations.

The Position of the Saddle-pin.—The position of the saddle-pin is generally determined with reference to the usual position of the link-block to prevent excessive slotting of the block at that position. The saddle may be placed on the go-ahead end of the link. The axis of the saddle-pin will then be in a prolongation of the axis of the link-block when the link is in full-gear ahead position. This construction is used in links of engines of certain types of vessels. It may coincide with the axis of the link-block when the latter is at the important point of cut-off, as in passenger-engines. The center of the saddle-pin may be on the center of the link arc or before or

behind that position in engines that run much in both directions. Offsetting the saddle-pin to equalize cut-off is necessary when the link-pins are behind the link-arc. A finite connecting-rod tends to reduce the offset as the latter increases with the length of the connecting-rod.

Position of the Reverse-shaft.—This shaft must be well supported, and as a rule practical considerations bring it too close to the link. Small variations of position do not affect results greatly.

Length of Rods.—In general, long arms tend to reduce inequalities and short arms to increase them. Advantage may be taken of this fact and inequalities may, in some cases, be made to offset each other.

Open or Crossed Rods.—If the open-rod construction is used, the lead will increase as the link is shifted from full to mid gear; with crossed rods the lead will decrease. The length of an eccentric-rod should be at least twelve times the throw of the eccentric.

Link-arc.—The length of the link-arc should be at least four times the throw of the eccentric. The radius of the arc is equal to the length of the eccentric-rod if its link-pin is on the link-arc. If the center of the link-pin is behind the link-arc, then the radius of the arc exceeds the eccentric-rod in length by the distance that the link-pin center is from the link-arc measured along the eccentric-rod. The length of the link-arc radius just given will give equal lead on both strokes if the valve has equal laps. If unequal laps are given, so that the cut-off on the two strokes may be equal or nearly so, then, of course, the leads will be unequal. A somewhat greater or less length may be used, but it will cause the leads to be unequal, and too large variation is not advisable unless the effect is worked out on a diagram.

Equivalent Eccentric, Open Rods (Fig. 189).—Suppose the link in its midposition to the right of the figure, the crank on the left center, the direction of rotation to be as shown, *OC* and *OD* the positions and throw of the eccentrics. With a radius equal to the length of the eccentric-rod, viz., from the center of the eccentric to the center of its link-pin, and with the centers of the link-pins as centers, describe arcs cutting *AB* at *c*. Then with a center on *BA* (produced) describe an arc through *C*, *c*, and *D*. Divide that portion of the link-arc travelled by the link-block into any number

of equal parts, and also divide the arc *CD* into the same number of parts. Then if 8 be the number of parts so chosen, and if the link is moved 1/8 of the link-arc from full gear ahead, the motion of

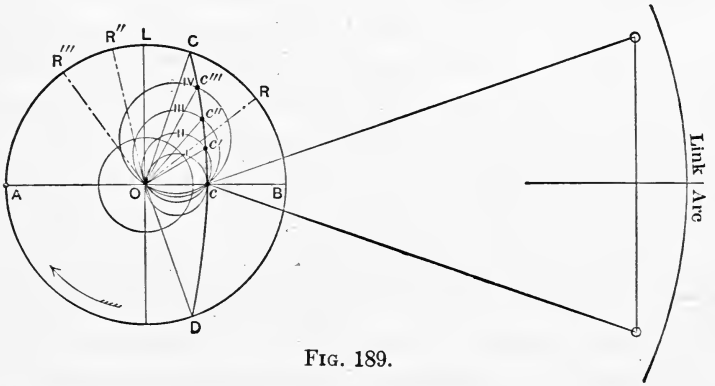

FIG. 189.

the valve will be that due to an eccentric whose throw is Oc''' and whose angular advance is LOc''', where Cc''' is 1/8 of CcD.

If the rods are crossed the construction is practically the same, but the curvature of the arc CcD is reversed as in Fig. 190.

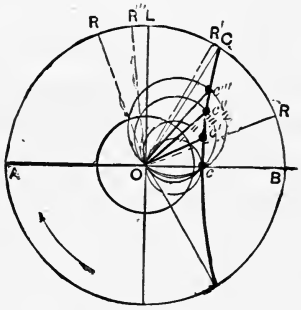

FIG. 190.

Ex. 125. Design a Stephenson link for a tug of a vertical engine; boiler-pressure, 100 pounds; cut-off, 3/4 stroke; jet condenser, 26″ vacuum; 125 revolutions; lead, 1/16″; maximum port-opening, 3/4″. Connecting-rod = 5 cranks. Assume position of reverse-shaft and other required data.

Buckeye Engine.—Fig. 191 is a cross-section of a tandem compound engine of the Buckeye type. The valve mechanism is composed of a main and a cut-off valve, the latter controlling ports in the main valve. Both valves are of the piston type in which steam is admitted in the central part, and exhaust takes

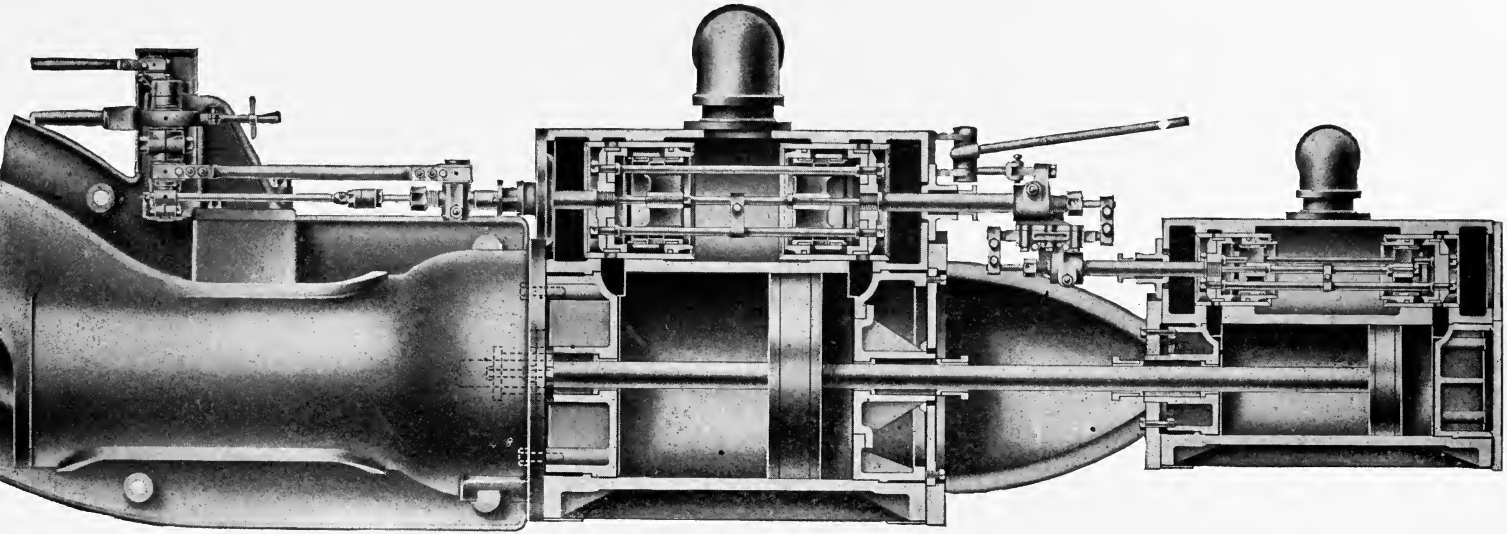

FIG. 191.—Buckeye Tandem Compound.

place at the ends. Admission of steam is practically controlled by the cut-off valve, while exhaust is controlled by the main valve alone. The main valve-stem is hollow and the cut-off valve-stem works through the main valve-stem.

Fig. 192 illustrates the valve-gear diagrammatically. Let *OB* represent the crank rotating anticlockwise, *c''* be the cut-off valve riding on the top of the main valve *m''*. In the position shown, the live steam is passing through ports *a* and *b* into the cylinder and the exhaust through the port *b'* is about to be closed by the end of the main valve. The angular advance is negative, since the exhaust is on the outside of the main valve. Therefore the main eccentric is found at some point *M* and the cut-off at some point *C*.

By an ingenious system of levers the cut-off valve receives not only the motion due to its own eccentric, but also that due to the

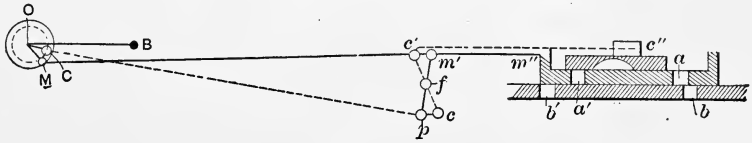

FIG. 192.

main eccentric. Hence the motion of the cut-off valve relative to the main valve is due to the cut-off eccentric alone. This motion is similar to that of a man walking in a moving car. The motion of the man relative to the ground is the resultant of his own and the car's motion; relative to the car his motion is due to his own movements alone, and the car may be considered stationary.

The main valve receives its motion directly through the eccentric-rod *Mm'* and valve-stem *m'm''*. At *m'*, however, it drives also a lever pivoted at *p*. This lever carries another lever that pivots at *f*. The cut-off eccentric *C* by its eccentric-rod *Cc* drives this second lever at *c*. Suppose the cut-off eccentric stationary, then *c'* and *m'* would have the same motion, since the point *c'* would have twice the motion of the pivot *f* about the pivot-point *c* (stationary temporarily). Any movement of *c* will be given to *c'* unchanged in amount, but reversed in direction.

If the cut-off valve is put in its midposition in Fig. 192, it will be found to have a negative lap equal to about half the port-open-

ing, a. To vary the point of cut-off the position of the cut-off eccentric center is rotated (the radius, OC, being unchanged) about O. Its three principal positions are shown in Fig. 193.

Lay off the diagram for the main valve as usual, BOP being the angular advance, Pe and Pi being the exhaust- and steam-laps. With a center C_0 and a radius equal to the negative lap of the cut-off valve describe a circle tangent to OA. Draw any crank position $O7$. Drop the perpendicular $C_0 8$. Then from the construction of the Bilgram diagram $C_0 8 + C_0 9$ is the distance that the cut-off valve must move to close the port in the main valve, since we may consider the latter stationary. At crank position OC_0, the port is

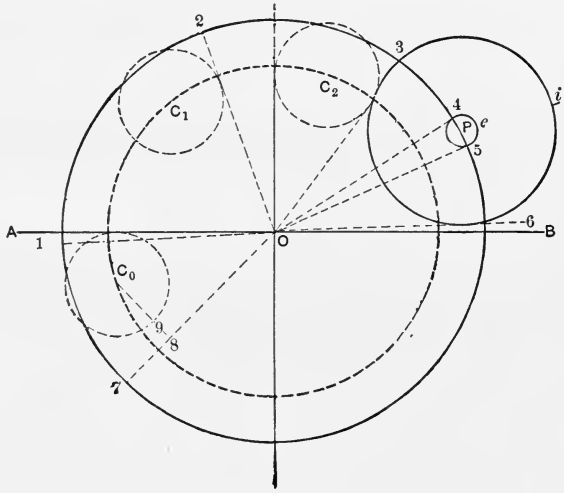

FIG. 193.

open, the negative lap, and at OA the port is closed. If the port in the main valve is closed, it is a matter of indifference whether the port in the cylinder is open or closed. If the eccentric center is rotated to C_1, then the cut-off is in crank position $O2$. The latest desirable cut-off point of the cut-off valve is $O3$, or at the point of cut-off of the main valve.

The width of the cut-off blocks must be such that the blocks will not overrun the port and open on the back edge when the valve is set for the shortest cut-off. The greater the throw of the cut-off eccentric the more rapidly the valve passes over the port

in the main valve and the quicker the cut-off. But this also increases the width of the blocks and the consequent friction.

Ex. 126. Make a diagrammatic sketch for a Buckeye valve-gear and its Bilgram diagram for a 20″×36″ engine, making 125 revolutions per minute, lead of the main valve, 1/16 in.; maximum cut-off, .8 stroke; minimum cut-off at the beginning of the stroke; exhaust opens and closes at .9 stroke; connecting-rod, 9 feet long; ports in the main valve 2/3 of those in the cylinder.

Meyer Valve (Fig. 191).—Consists of a main valve, *C*, with ports through the valve, and two blocks, *DD*, forming a cut-off valve

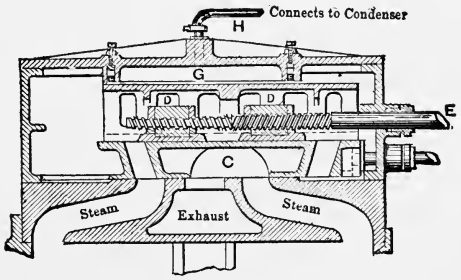

FIG. 194.—Meyer Valve.

that rides on the main valve. The main valve governs the latest point of steam cut-off and the points of exhaust opening and closure. The earlier points of cut-off can be varied by adjusting, by hand, the distance between the cut-off blocks. Means are provided for rotating the cut-off valve-stem that fits with right and left threads of different pitches into corresponding nuts in the blocks. One thread is necessarily larger in diameter than the other, otherwise it would be impossible to put on one of the valves. To make the valves cut off earlier they must be separated, to cut off later they must be brought closer together. By giving the main valve unequal laps equal cut-off may be obtained at the maximum point of cut-off. By the unequal pitches of the right- and left-hand screws, equal cut-off may be secured at two points, as, for example, the most important point of cut-off and the earliest point of cut-off. At all other positions the cut-off will be unequal. In reversing engines, the cut-off eccentric is directly opposite the crank.

Ordinarily it has an angular advance of 75°. Its throw is not an absolute quantity, but is generally a little larger than that of the main valve.

Corliss Engine.—In this type there are two steam- and two exhaust-valves placed in separate chambers, either in the cylinder-heads or above and below the cylinder at its ends. The valves oscillate about their axes, which are at right angles to that of the cylinder. For proper drainage the exhaust-valves are always the lower ones. The lower or exhaust valves have an invariable motion which they receive from a wrist-plate. The oscillating movement of the latter about a heavy pivot symmetrically placed in regard to the axes of the four valves is obtained as follows. The eccentric, set ahead of the crank a little more than 90 degrees, as the valve has very little lap, drives a rocker-arm, which, in turn, drives the wrist-plate BA (Fig. 195). The links, as BE, never drive the valve-stem directly, but indirectly, through a detachable mechanism. In the figure, the governor, of the revolving pendulum type, moves a cam xg through the linkage NMl. On the extreme throw to the right of the link BE, the fork gTh is forced by the spring hs to engage with the block shown just above y. On the stroke to the left, the arm BE carries this block, which is rigidly attached to the valve-stem, with it until the arm gT of the fork comes into contact with the cam. This causes the fork to rotate anticlockwise and to let go of the block. A piston which had been lifted in a dash-pot by the previous motion promptly closes the valve.

Setting Single-eccentric Corliss-engine Valves.

In the design of this valve mechanism advantage is taken of the great variation in the rapidity of motion that may be produced by an assemblage of links. It is desirable that a valve should open and close rapidly; when wide open or shut the motion should be as small and as slow as possible and the motion should be a minimum when the maximum pressure is on the valve.

The student should note the variation in steam-valve movement due to variation of position of the links Ob_2, b_2e_2, e_2v for the movement of the wrist-plate through equal parts of the arc b_2b_1. Similarly he should note the corresponding movement of the

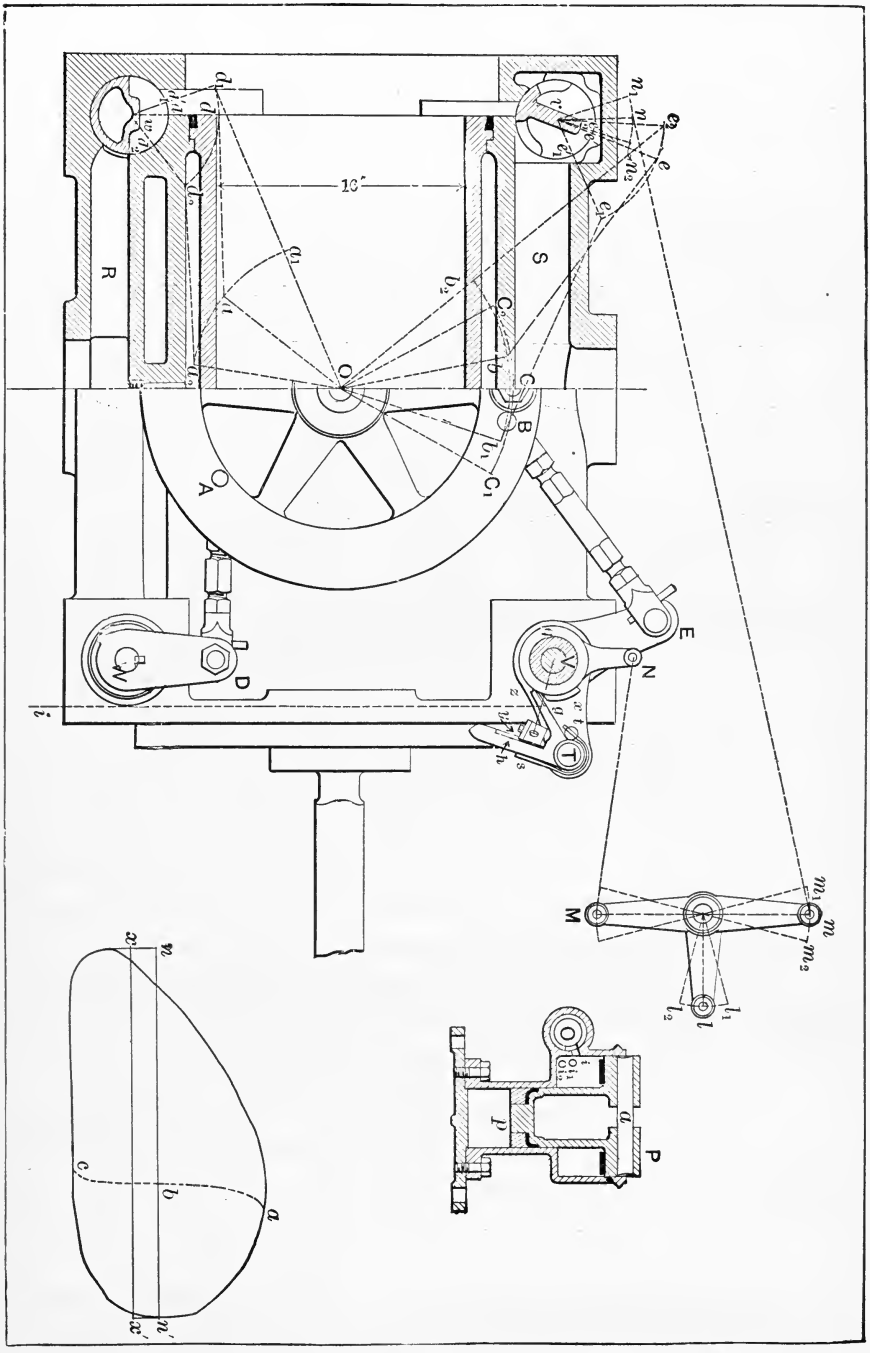

FIG. 195.—Corliss Engine. (From Peabody's "Valve-gears.")

exhaust-valve due to changes in the relative position of the links Oa, a_1d_1, d_1w for movement of the wrist-plate through equal parts of the arc a_1a_2.

An examination of the automatic method of detaching the steam-valves will show that it can only operate through a crank

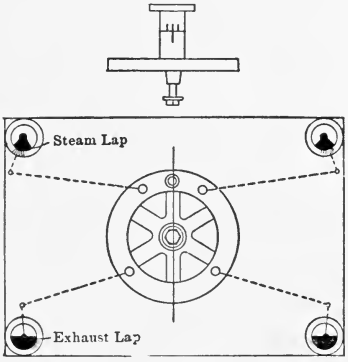

FIG. 196.

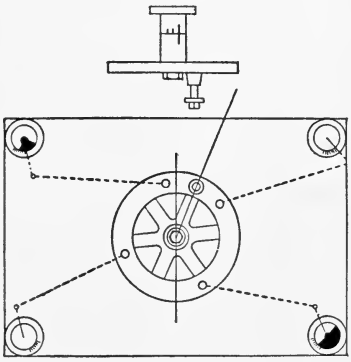

FIG. 197.

movement of 90 degrees in each stroke, i.e., while Th is rising. We are at liberty to choose the position of these 90 degrees in a semi-revolution if the steam- and exhaust-valves are operated by independent eccentrics. If, however, only one eccentric is used, the necessity of having the exhaust-valve open and close at proper points practically limits the detachment of the steam-valve between the dead-center and 3/8 stroke positions of the piston. With double eccentrics by giving the steam-valve negative steam-lap and its eccentric negative angular advance later points than that above given may be obtained.

When the stroke is short compared with the diameter of the cylinder the method of connection illustrated in Figs. 195 and 198 is used; if the stroke is long compared with the diameter of the cylinder, the form shown in Figs. 196 and 197 may be used.

"The following method of setting the valves applies to single-eccentric engines of the following types: Reynolds, Twin City, Hamilton, Murray Bates, Cooper, Monarch (old), Harris, Hardy-Tynes, Lane and Bodley, and all others of similar valve arrangement.

"First. Place wrist-plate *D* in central position as shown in Fig. 196, with both valves hooked on, so that mark on wrist-plate hub will coincide with center mark on stud; loosen stud-nut and place a piece of cardboard between washer and wrist-plate and tighten so that wrist-plate will not move.

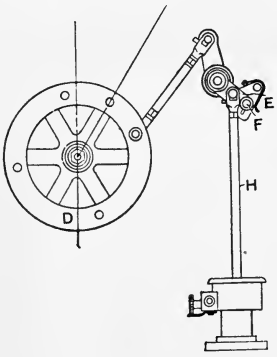

FIG. 198.

"Second. Loosen lock-nuts on shackle-rods and adjust valves until they have laps as found in table (which are given in parts of an inch opposite size of cylinder), after which set up lock-nuts securely.

"Third. Plumb rocker-arm by hanging a plumb-line over center of pins, then adjust hook-rod between rocker-arm and wrist-plate.

"Fourth. Remove cardboards so wrist-plate and rocker-arm can oscillate; now connect eccentric-rod to rocker-arm and revolve eccentric on shaft in the direction the engine is to run, being careful that mark on wrist-plate coincides with side marks on stud when making adjustments of the eccentric rod. Next adjust dash-pot rods *H* as follows (Fig. 198): When rod is down as far as it will go, the shoulder *E* on brass hook should just clear the steel block *F* on valve-arm as shown in cut, leaving a clearance of 1/16 inch between block and catch-plate. Swing wrist-plate to opposite side and adjust in same manner.

Table

Diameter of Cylinder	Lap of Steam Valves	Lap of Exhaust Valves	Lead of Steam Valves
8	3/16	1/16	1/32
10	3/16	1/16	1/32
12	3/16	1/16	1/32
14	1/4	1/8	1/32
16	1/4	1/8	1/32
18	1/4	1/8	1/32
20	1/4	1/8	1/32
22	5/16	3/16	3/64
24	5/16	3/16	3/64
26	5/16	3/16	3/64
28	5/16	3/16	3/64
30	5/16	3/16	3/64
32	3/8	1/4	1/16
34	3/8	1/4	1/16
36	3/8	1/4	1/16

"Fifth. Place crank on exact dead-center and revolve eccentric in the direction engine is to run until valve on end nearest piston shows amount of lead as given in table. Now fasten eccentric and revolve engine in direction it is to run; when opposite dead-center the opposite valve should show the same amount of lead.

"Sixth. Set governor on starting-pin and adjust trip-rods so that cams will just trip valves as wrist-plate coincides with travel-marks on stud when oscillated.

"Seventh. Now remove starting-pin and allow governor to go as low down as it will, then adjust safety-toes on trip-cams so that valves will not hook on when wrist-plate is swung to travel-marks on stud.

"*Caution.*—The adjustment of rod *H* is very important: if too long something will break, if too short the valves will not hook on. Adjust your dash-pots so as to maintain a good working vacuum."*

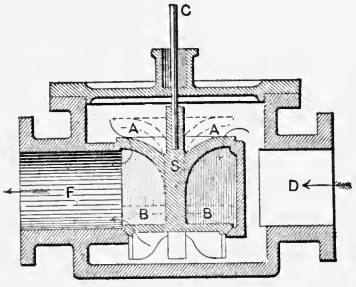

FIG. 199.

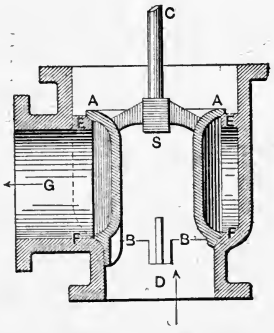

FIG. 200.

Poppet-valves.—Slide-valves give much more trouble than pistons when steam is used that has been superheated to such

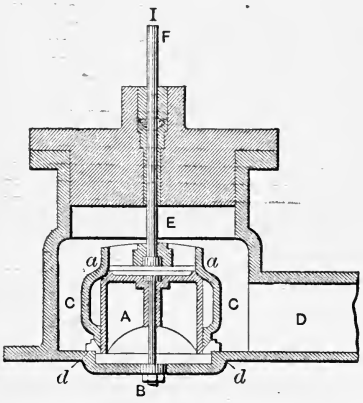

FIG. 201.

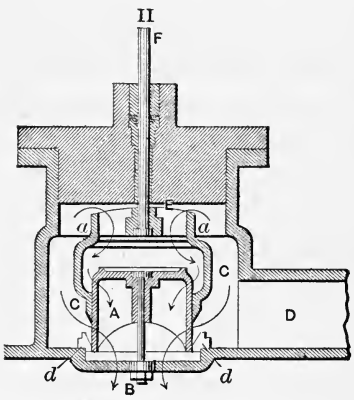

FIG. 202.

a degree that it is still superheated on entering the cylinder. This is probably due to the cooling received by the cylinder-bore

* Mechanics.

during exhaust, whilst there is no such effect on certain parts of the surfaces rubbed by the valve.

As the steam-valve must have a variable cut-off it must also

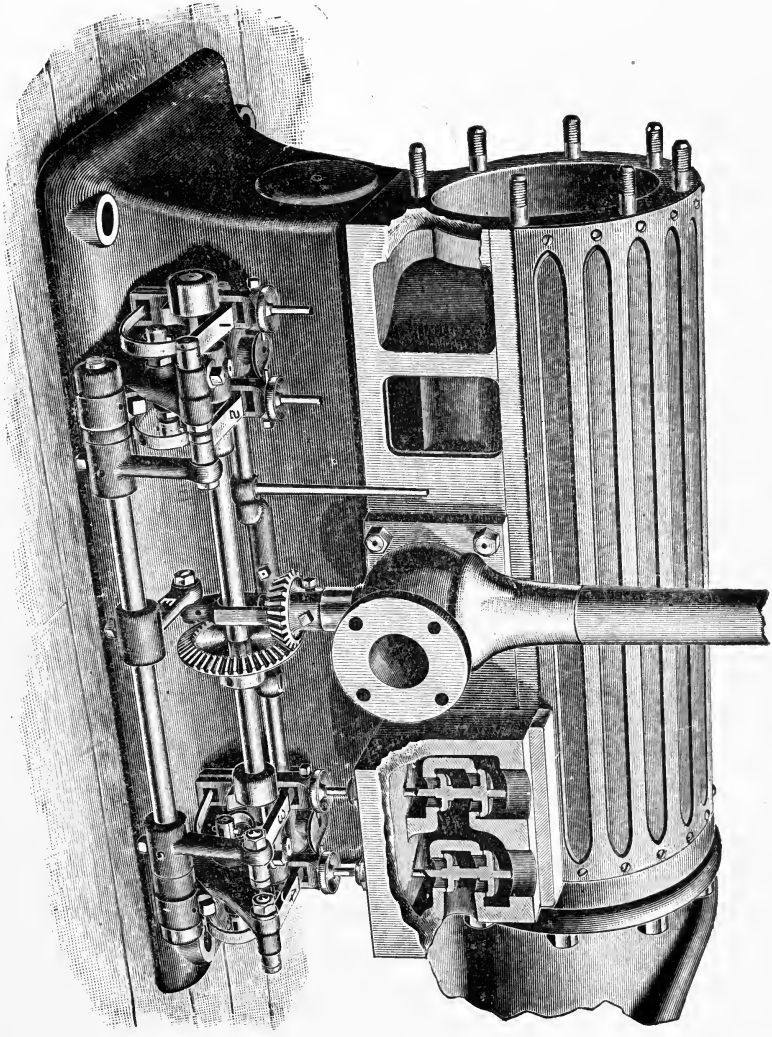

FIG. 203.

be a balanced valve. Exposed to high pressures, it must be very stiff to maintain the truth of its steam-surfaces, and it must also be tight when highly heated. The valve that best satisfies these

requirements when superheated steam is used is a drop-valve called the double poppet-valve. It may be balanced as closely as desired, since the steam-pressure is made to act on the valve in

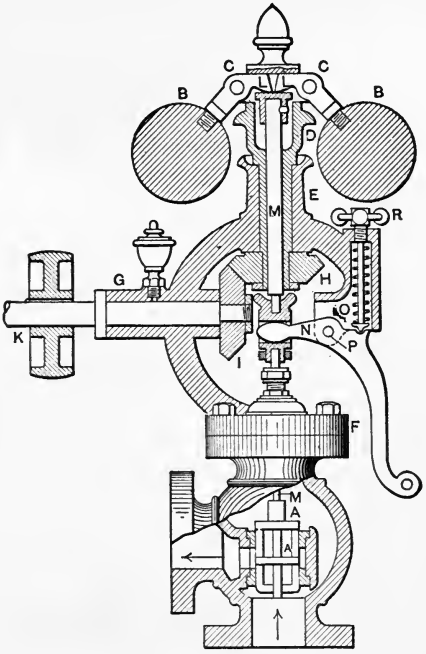

FIG. 204.—Double Poppet-valve used as a Governor.

opposite directions at all times. Old forms are illustrated in Figs. 199–202. The valve of the Putnam engine is shown in Fig. 203. (See page 440.)

CHAPTER XIII.

SPEED VARIATION CONTROL.

Turning Effort in the Crank-shaft.—The motion of a body is uniform when the resisting forces of all kinds are exactly balanced at each and every instant by the impelling forces. For some purposes it is desirable to have the crank-shaft rotate absolutely uniformly. Not many years ago it was usual to describe the uniformity of rotation of an engine by specifying that its revolutions per minute would not vary more than one or two from the mean in changing from no load to full load. An up-to-date engine for some electrical purposes is now designed not to vary per revolution more than a certain number of pole degrees—eight, for instance—from the position that absolute uniformity of rotation would give it. This would be a displacement in inches on the crank-pin circle of $\delta'' = \frac{8}{360 \times 30} \times 2\pi r$ if the generator had 30 poles; i.e., a pole degree equals the degrees between two poles divided by 360. In cotton-mills uniformity is exceedingly desirable. Large capacity for certain machines is secured by driving shuttles carrying cotton threads so fast that the threads are on the point of breaking but do not break. Calling this the economical speed, a lower speed would produce less cloth; and a momentary higher speed, causing the threads to break and the machine to be stopped to allow the operator to tie the threads, would also reduce production. The exactness required for various classes of machinery will be given later.

Two different kinds of uniformity must be secured. If the load should vary after the point of cut-off, it is evident that the governor controlling the steam-supply can exercise no influence on the speed until the next stroke. Hence the engine must change

speed to make the governor act, and it controls by regulating the amount of steam or the pressure on the stroke following the change of speed. The steam-governor affords means of controlling the number of strokes per minute, but it is also desirable to control the speed of the crank-pin during a stroke. If we suppose the resistance is uniform, then uniform rotation will be secured by uniform tangential pressure on the crank-pin, since it is only the tangential pressure that is effective in the production of rotation.

Net Steam-pressure.—The net steam-pressure on a piston at any instant is the difference between the absolute driving steam-pressure on one side of the piston and the absolute back pressure on the other side at the same instant. The amount of this net pressure cannot be obtained from a single card, since the bottom line on such a card is the back pressure on the same side of the piston on the return-stroke. To obtain exact results we should have two indicators, each taking a single card during the same revolution of the engine.

In Fig. 204 let A and B be cards so taken. For convenience of illustration both diagrams are shown on one card. Then the net steam-pressure at any piston position b is $ab - bc = ac$,

where ab = absolute forward pressure,

bc = absolute back pressure,

ac = difference between driving-pressure of one card and back pressure of the other card.

Draw a new card, 12345, whose ordinates represent the net forward steam-pressure.

When the back pressure exceeds the forward pressure the ordinates are laid off, as in the figure, below the base-line.

Variable Velocity of the Piston.—If the crank-pin revolves with uniform velocity it will pass over equal arcs in equal periods of time. The piston then necessarily passes over unequal distances in equal periods of time. On page 73 it was shown that these distances increased from the beginning to the middle of the stroke and then decreased to the other end of the stroke. The piston, then, must have a positively accelerated motion from the beginning of a stroke to near the middle and then a negative acceleration to the end of the stroke. It was further shown that shortening the connecting-rod increased the amount of all irregularities.

Bodies at rest or moving uniformly are under the action of forces that are absolutely balanced. Bodies having an accelerated motion are storing up work represented by the increasing kinetic

FIG. 205*a*.

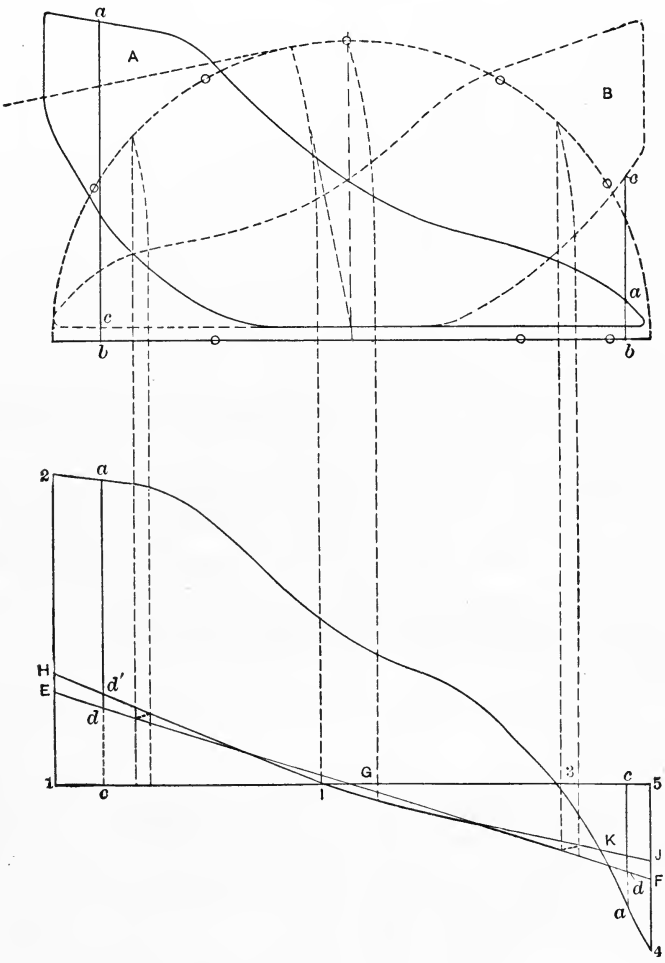

FIG. 205*b*.

energy of the moving masses. This energy will be given out again if the moving masses slow down. At any point in the first half of the stroke a part of the net steam-pressure (acting through a distance) will be required to produce the necessary acceleration

of all parts of the engine having a reciprocating motion or a motion of translation. On the other hand, the net steam-pressure during the second half of a stroke will be augmented by the pressure made available by the necessary slowing down of the reciprocating parts.

Reciprocating Parts.—These are the piston, piston-rod, cross-head, and half the weight of the connecting-rod. (See Vol. XXVI, Trans. A. S. M. E.) In the discussion of accelerations and forces on the assumption of an infinite rod we shall use the above proportion of the weight of the real rod in finding the forces, as the change required by the use of a finite rod is then easily made.

Pressure Required to Accelerate the Reciprocating Parts (Figs. 205 and 206).

CASE I.—*Infinite Connecting-rod.*

Let V = constant velocity of the crank-pin in feet per second;
v = variable velocity of the piston in feet per second;
r = radius of crank in feet;
θ = length of the arc, measured from the dead-center, swept through by a point on the crank-arm at unit distance from center of the shaft in t seconds;
W = weight of the reciprocating parts.

Then $r\theta$ = length of arc swept through by crank-pin in t seconds $= Vt$.

$$rd\theta = Vdt, \quad \text{hence} \quad \frac{d\theta}{dt} = \frac{V}{r}.$$

$r(1-\cos\theta) = s =$ { distance the piston moves in t seconds from a dead-center whilst the crank-pin moves $r\theta$.

$$\frac{ds}{dt} = \frac{d(r - r\cos\theta)}{dt} = \frac{r\sin\theta d\theta}{dt} = V\sin\theta \text{ since } \frac{rd\theta}{dt} = V.$$

But acceleration $$= \frac{dv}{dt} = \frac{d^2s}{dt^2} = \frac{d(V\sin\theta)}{dt} = \frac{V\cos\theta d\theta}{dt} = \frac{V^2\cos\theta}{r}.$$

The product of the acceleration and the mass that has been accelerated gives the force required to produce the acceleration; or $F = \frac{W}{g}\frac{V^2\cos\theta}{r}$ = the total force required to produce the necessary acceleration of the reciprocating parts at the piston position cor-

responding to a crank-angle, θ, if the crank-pin revolves uniformly.

As the indicator-cards show pressures in pounds per square inch it is advisable to divide the total pressure F by the area of the piston in square inches. Hence $f = \frac{W}{gA}\frac{V^2 \cos\theta}{r}$ is the loss or gain of pressure in pounds per square inch of piston area arising from the necessary acceleration, positive or negative, of the reciprocating parts (at a piston position corresponding to the crank-angle θ).

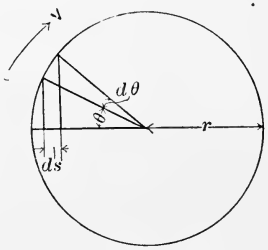

FIG. 206.

Mass of Reciprocating Parts Considered as Concentrated at the Center of the Crank-pin.—If the weight of all the reciprocating parts could be concentrated at the center of the crank-pin the centripetal force of such a weight would be $\frac{WV^2}{gr}$. The horizontal projection of this radial force would be $\frac{WV^2 \cos\theta}{gr}$ or the above force, F.

In the above equation for f, the only variables are f and $\cos\theta$. As the equation is of the first degree, it is therefore the equation of a straight line. This can be seen by giving θ a few values such as 0, $\frac{\pi}{4}$, $\frac{\pi}{2}$, and π and plotting the results.

Hence it is only necessary to find the value of f for $\theta = 0$ and $\theta = \pi$ and join the points so found by a straight line.

For example suppose the cards, Fig. 205, are from a horizontal high-speed engine.* With the following data find the pressure per square inch of piston area that will be required to accelerate the reciprocating parts at the beginning of a stroke, neglecting the angularity of the connecting-rod.

Revolutions	300	
Stroke	12	inches.
Diameter of cylinder	10	"
Length of connecting-rod	36	"

*Trans. A. S. M. E., Vol. XI.

Distance from wrist-pin (cross-head pin) to the center of gravity of the connecting-rod..... 20.15 inches.
Principal radius of gyration of connecting-rod ..... 15 "
Weight of connecting-rod..... 70 pounds.
Weight of piston, piston-rod, and cross-head..... 90 "
Weight of above and half connecting-rod.....125 "
When $\theta=0$ or π,

$$f=\pm\frac{125(2\times\pi\times\frac{1}{2}\times\frac{300}{60})^2}{\pi\times5^2\times32.16\times\frac{1}{2}}=\pm\frac{125\times4\times\pi}{2\times32.16}=\pm24.42.$$

(Fig. 205.) Lay off $1E$ or $5F=24.42$ pounds to the scale of the indicator-card pressures. Then any ordinate as, *dc*, represents the pressure that is required to produce (or is produced by) the instantaneous variation of velocity in the reciprocating parts. Negative pressure is therefore indicated above and positive pressure below the reference line 15. As these pressures are always modified by the use of a finite rod, its effects will be discussed next. The equation of f and θ, when the length of the rod is considered, will no longer represent a straight line such as EF, but takes the form of a complex curve HIJ.

CASE II. *Finite Connecting-rod.*—In general, sufficient accuracy is attained if only three to five points on this curve are obtained. The formula to be used for each of these five points may be obtained from the general formula by the substitution of the proper crank-angle.

Piston Position of Zero Acceleration.—After reaching its maximum velocity the piston begins to slow down. Evidently the acceleration changes sign and passes through zero at the point of maximum piston velocity. With an infinite rod this occurred at half-stroke, the crank arm and rod being at right angles at that point. With a finite rod this point will occur before half-stroke, and its position may be obtained graphically as follows:

(Fig. 207.) Draw a circle with a radius $OA=r$, the throw of the crank. Perpendicular to OA draw AC and lay off AC equal to the length of the connecting-rod. If OAC is swung around O till C cuts the line OD, the required point E will be obtained. To do this, measure the hypothenuse, OC, and lay off $OD=OC$. With D as a center and a radius $=AC=$length of the connecting-rod,

describe the arc EF. Then OE will be the crank-pin position and GF the distance the piston is from its dead-center G when the piston has its maximum velocity and its acceleration is therefore zero, and hence $f=O$.

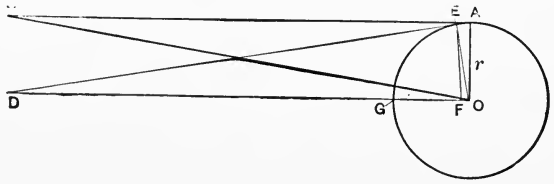

FIG. 207.

Accelerations, Finite Connecting-rod (Fig. 55).—In general, however, for any position of the crank-pin θ degrees from the dead-center, the piston has moved

$$x=r(1-\cos\theta)+l(1-\cos\alpha).$$

$$l\sin\alpha=r\sin\theta, \qquad r\theta=Vt,$$

$$rd\theta=Vdt, \qquad \sin\alpha=\frac{r}{l}\sin\theta,$$

$$\cos\alpha=\pm\sqrt{1-\left(\frac{r}{l}\sin\theta\right)^2}=\pm\left(1-\frac{1}{2}\frac{r^2}{l^2}\sin^2\theta\right), \text{ approximately.}$$

(By squaring the above quantity and neglecting $\sin^4\theta$ the quantity under the radical is obtained.)

$$\therefore \quad x=r\left(1-\cos\theta\pm\frac{1}{2}\frac{r}{l}\sin^2\theta\right),$$

$$\frac{dx}{dt}=\frac{rd\theta}{dt}\left(\sin\theta\pm\frac{1}{2}\frac{r}{l}\sin 2\theta\right).$$

But $\dfrac{rd\theta}{dt}=V.$

$$\frac{dx}{dt}=V\left(\sin\theta\pm\frac{1}{2}\frac{r}{l}\sin 2\theta\right),$$

$$\frac{d^2x}{dt^2}=\frac{V}{dt}\left(\cos\theta d\theta\pm\frac{1}{2}\frac{r}{l}\cos 2\theta d(2\theta)\right)$$

$$=\frac{Vd\theta}{dt}\left(\cos\theta\pm\frac{r}{l}\cos 2\theta\right)=\frac{V^2}{r}\left(\cos\theta\pm\frac{r}{l}\cos 2\theta\right).$$

Forces to Produce Required Acceleration.—As in the preceding case

Force = mass × acceleration.

$$\therefore F = \frac{W}{g}\frac{V^2}{r}\left(\cos\theta \pm \frac{r}{l}\cos 2\theta\right) \quad \text{and} \quad f = \frac{W}{gA}\frac{V^2}{r}\left(\cos\theta \pm \frac{r}{l}\cos 2\theta\right).$$

The value of this equation for

$$\theta = \quad 0°,\ f = \frac{W}{gA}\frac{V^2}{r}\left(1 + \frac{r}{l}\right),$$

$$\theta = 180°,\ f = \frac{W}{gA}\frac{V^2}{r}\left(-1 + \frac{r}{l}\right);$$

$$\theta = \quad 90°,\ f = \frac{W}{gA}\frac{V^2}{r}\left(-\frac{r}{l}\right);$$

$$\theta = \quad 45° \text{ and } 135°,\ f = \frac{W}{gA}\frac{V^2}{r}\cos 45°;$$

The value for $\theta = 45°$ or $135°$ is the same as in Case I and may therefore be used if the corresponding piston positions are obtained.

Substituting the value of $\left(\frac{W}{gA}\frac{V^2}{r}\right)$ already found (24.42 pounds) and the value of $\frac{r}{l} = \frac{6}{36}$, we obtain $f_0 = 24.42\ (\frac{7}{6})$; $f_{180} = (24.42)\ (-\frac{5}{6})$; $f_{90} = (24.42)(-\frac{1}{6})$. Plotting these results and those obtained for zero and equal acceleration (45°) we obtain the curve *HIJ*.

Pounding of the Engine.—It can be readily seen that the inertia of the reciprocating parts may be used to equalize the pressure that is exerted on the piston-rod during the entire stroke. At first sight this might seem desirable, and it has been so enunciated many times. On the contrary, it is not desirable, as it will cause the engine to pound on the centers, due to the sudden change from positive to negative pressure. Smoothness of running is secured by such weight of reciprocating parts as will cause the forward pressure to increase gradually from zero to a maximum at the end of the stroke. The sudden cessation of pressure will not produce a pound, but the taking up of lost motion under heavy pressure will produce a destructive pound that should be avoided. In

shaft-governed engines at cut-off shorter than the normal, the lead is often made negative. This tends also to reduce the tendency to sudden reversal of stress. Heavy compression also has the same effect.

Determination of Tangential Pressures.—Let the ordinates of $H2K4J$ of Fig. 208 be the same as those of $H234JK1H$, Fig. 205, the abscissas being reduced to one-third of their original dimensions. With a radius equal to the length of the connecting-rod ($3\times HJ$) lay off B and D from H and J and construct the circle BCD. Divide it up into any number of equal arcs and let C be one of the division points. With the length of the connecting-rod as a radius and C as a center, find A, the corresponding cross-head position. Having taken out the pressures required to produce acceleration of the masses, we may consider the forces that we are now discussing as static.

The cross-head and crank-pin are each under the action of three forces produced by the action of one force acting in the direction of HJ and of magnitude p. The pressure in the connecting-rod is greater than p, since the component of the connecting-rod pressure along HJ must equal p.

Prolong the crank-arm OC till it intersects a perpendicular, AI, erected at A. The tendency to rotate around the instantaneous center, I, is zero, since the forces producing change of velocity have been removed Taking moments about I, all forces disappear from the equation except p and the tangential force T acting on the crank-pin.

$$p\times AI = T\times CI.$$

$$T = p\times\frac{AI}{CI}.$$

On OI lay off $OP' = p$ and draw $P'T'$ parallel to the connecting-rod position AC and intersecting OM, a perpendicular erected to BD at O.

The triangles $OP'T'$ and CIA are similar, therefore

$$\frac{OT'}{OP'} = \frac{AI}{CI}. \quad \therefore\ OT' = p\times\frac{AI}{CI}.$$

Hence OT' is the reqiured tangential pressure at this crank-position.

It is evident that connecting-rod positions will have to be drawn for each crank-position in succession to determine a new piston position and the corresponding net pressure, such as p. By laying off this pressure from the center of the shaft on the crank-position, prolonged if necessary and drawing a parallel to the new connecting-rod position as $P'T'$ was drawn, the tangential pressure for the new crank-position will be indicated by the distance between O and the point of intersection of the parallel and the line OM. It is not necessary to find the instantaneous center, as that is only necessary to prove the construction.

The tangential pressures so found may be laid off in two ways:

1. (Fig. 208.) At each point of division of the crank-circle

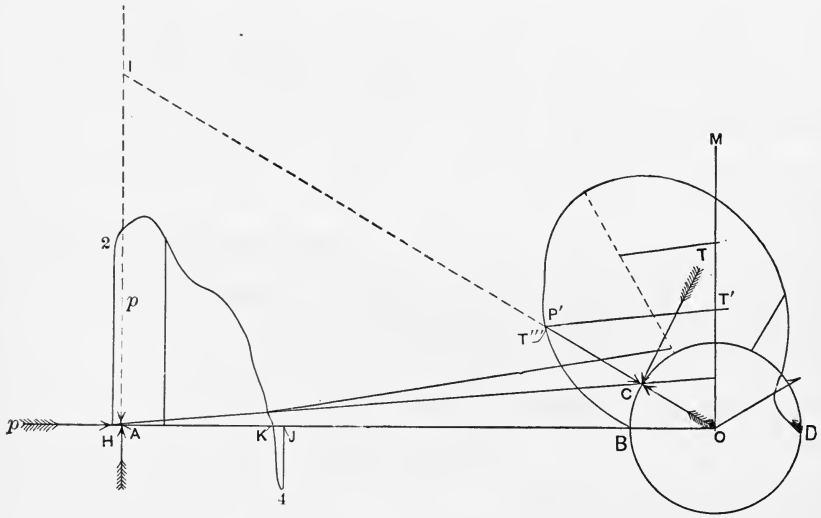

FIG. 208.

lay off the tangential pressure radially—at right angles to its true position—from the center of the crank-pin. CT''', for instance, is equal to OT'. Join the points so found. The area enclosed by this line and the perimeter of the circle does *not* measure work.

2. (Fig. 209.) A much more useful diagram is formed by rectifying the path of the crank-pin—thus giving actual linear distance—and at each point of division on the rectified perimeter erecting a perpendicular equal to the tangential pressure at that point. All areas then measure work and by means of a planimeter or by

the method of ordinates we can obtain the excess or deficit of work—variation from the mean—that produces either positive or negative acceleration.

The importance of dividing the semicircles into equal parts is now apparent, as it facilitates the rectification of the arcs. According to Rankine the following method is accurate to $\frac{1}{1000}$. (Fig. 210.) To rectify the circular arc AEB prolong the chord AB to C, making $AC = \frac{3}{2}AB$. With a center at C and a radius AC describe an arc AD. At B draw a tangent, BD, limited by the arc AD. Then BD = arc AEB in length.

Fig. 209, has many important qualities. For instance, its area is exactly equal to that of the original indicator-card, thereby

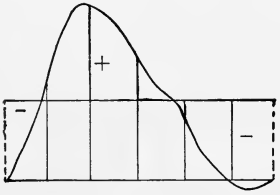

FIG. 209.

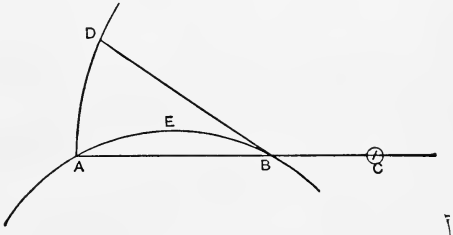

FIG. 210.

illustrating the fact that there is no loss of energy, friction excepted, in the conversion of the "to-and-fro" work of the piston into the work of rotation of the crank-pin.

If we divide the area of the card, Fig. 209, by its length and lay off a line parallel to the base with the resultant pressure as the ordinate, we shall divide the card into two parts. The + area indicates work in excess of the mean, the − areas indicate corresponding deficits. In every case the sum of the + areas must equal the sum of the − areas per revolution.

In the case of a single engine one of the + areas may be called ΔE and its ratio to work per *revolution* or 2 (area of the rectangle) =2 (the area of the indicator-card) may be called $\frac{\Delta E}{2\int \text{pds}}$. This fraction is often called the fluctuation ratio or coefficient of unsteadiness. Its value ranges from 1/6 to 1/4 with single-cylinder expansion engines, with a pair of engines of practically equal power coupled at right angles its value is from 1/25 to 1/15; and for three

engines coupled at 120 degrees apart it is 1/75 to 1/50. By means of a fly-wheel, the effect of all of these variations from the mean energy on velocity changes may be much reduced. The absorption of energy by the fly-wheel in speeding up reduces the highest velocity that would otherwise be attained and increases the lowest velocity by returning the absorbed energy.

The following table gives an approximate value of allowed coefficients of unsteadiness in *velocity* $= \frac{V_1 - V_2}{V} = k$.

For stamps, crushers, etc.	$1/5$		
" saw-mills and pumping-engines	$1/20$	$1/30$	
" weaving-machines and paper-mills	$1/30$	$1/40$	
" spinning-machines for coarse to middle-fine yarns	$1/35$	$1/50$	$1/60$
" spinning-machines for finer yarns	$1/50$	..	$1/100$
" belt-driven dynamo-machines	..	$1/150$	
" directly coupled dynamo-machines	$1/300$	$1/600$	$1/3000$

Approximate Formula for a Fly-wheel.

W = weight of the fly-wheel.

V_1 = maximum velocity of the rim, at radius R, in feet per second.

V_2 = minimum velocity of rim, at radius R, in feet per second.

V = mean velocity of rim, at radius R, in feet per second.

We shall assume that $V = \frac{V_1 + V_2}{2}$. This is not true frequently, as the maximum velocity may persist for a much longer or shorter period of time than the minimum velocity.

$$\frac{V_1 - V_2}{V} = k.$$

The radius R is generally taken from the center of the shaft to the middle of the rim. The proper radius is the radius of gyration, as we are really dealing with the mean of the squared radii. In dealing with thin rims in an approximate solution, the assumption of the mean radius is sufficiently accurate.

The kinetic energy of a mass, $\frac{W}{g}$ moving V_1 feet per second is $\frac{W}{2g} V_1^2$. If the velocity changes to V_2 feet per second the new

kinetic energy is $\frac{WV_2^2}{2g}$. The change of energy is

$$\frac{W}{2g}(V_1^2 - V_2^2) = \frac{W}{g}\frac{(V_1+V_2)(V_1-V_2)}{2} = \frac{W}{g} \times V \times kV = \frac{W}{g}kV^2.$$

This must equal ΔE.

$$\therefore\ W = \frac{\Delta E g}{kV^2}.$$

ΔE may be obtained in foot-pounds from the maximum + or − area in a diagram (Fig. 209), or it may be obtained from an assumed fraction of the work per revolution.

For example, find the weight of a fly-wheel for a 100 I.H.P. engine making 100 revolutions per minute; fluctuation of energy $= \frac{\Delta E}{2\int \text{pds.}} = .2$; fluctuation of speed $= \frac{1}{100}$; mean velocity of fly-wheel rim = 50 feet per second.

$$W = \frac{\frac{100 \times 33{,}000}{100} \times \frac{2}{10} \times 32.16}{.01 \times 50 \times 50} = 8490 \text{ pounds.}$$

Another method of reducing the difference between V_1 and V_2 is to reduce the amount of the + and − areas. This can be done by having the work done by two engines coupled at right angles, or three engines at angles of 120 degrees apart.

The formula $W = \frac{\Delta E g}{kV^2}$ is expressed in several forms:

Let N = number of revolutions per minute;
R_1 = mean radius of rim in feet;
R_2 = " " " " " inches;
R_g = radius of gyration in inches;
$I = WR_g^2$ = moment of inertia;

$$W = \frac{(\Delta E 32.16)}{k\left(2\pi R \frac{N}{60}\right)^2};$$

$$WR_g^2 = I = \frac{35{,}260 \Delta E}{kN^2} \text{ inch-pounds;}$$

$$\Delta E = .00034 WR_1^2 N^2 \quad \text{or} \quad .0000278 WR_2^2 N^2 \text{ foot-pounds.}$$

In Fig. 222 the curve of tangential effort of the high-pressure engine of a compound is given in full lines, while the curve for the low-pressure engine is given in dotted lines. From the positions of the points of zero-crank effort it is readily seen that the cranks of the engines are at right angles to one another. In Fig. 223 the ordinates of the two engines have been added and the variation from the mean ordinate *MC* is indicated.

Belt Wheels.—For many purposes the belt wheel, if properly proportioned so that it does not look weak, will be found sufficiently heavy to serve as a regulator. It will not serve where very close regulation is required, as in parallel operation of A. C. generators. Two per cent variation on either side of the normal speed is close enough for steady burning of lamps and a belted Corliss should run that close. If power and lamps are on the same circuit a heavier wheel should be used.

Horse-power of a Belt.—Authorities differ but common rules are:

Single belts transmit *one* horse-power per inch of width per 1000 feet linear veloc ty;

Double belts transmit *two* horse-power per inch of width per 1000 feet linear velocity;

At 3000 feet the effect of centrifugal force becomes perceptible and 5000 to 6000 feet is the economic limit if the life of the belt is to be considered.

The Arc of Contact.—This is supposed to be 180°. Reducing the arc increases slippage and causes less horse-power to be transmitted. The maximum ratio that should exist between driving and driven pulley should not exceed 5. With this large ratio the axes of the pulleys should be well separated. The bottom of the belt should be the tight side. The upper side should run with a perceptible sag.

General Details.—The face of a belt wheel should be crowned at the rate of $\frac{1}{8}$ inch to the foot. If over 40 inches wide, double staggered arms are used. The rims of wheels under 13 feet in diameter should be at least one inch in thickness and strengthened at the sides and middle by ribs. The middle rib serves to connect the thicker arms and rim and reduce shrinkage stresses.

The diameter of the hub is about twice that of the shaft and

the length of the hub is one and a half to twice the shaft diameter. This width is necessary to prevent the wheel from rocking on the shaft. The minimum weight of a *belt wheel* for good looking proportion is given in column five, Table A, page 389.

Weight of Balance Wheels.—In the analytical discussion it was shown that the efficiency of a fly-wheel varied with WR^2, where R^2 is the squared radius of gyration. It is evident for economy of material that the diameter of the wheel should be as large as possible, yet, for good looks, it may become too large.

When engines are used to drive generators it is convenient to express the weight of the *balance wheel* in terms of the revolutions of the engine and the kilowatts of the generator. To do this, *primary* constants will be given for single-cylinder engines, running at 100 revolutions per minute, the rim of the fly-wheel moving with a velocity of 5700 feet per minute. These constants will have to be modified in the case of multicylinder engines and in case the revolutions are not 100. Two sets of primary constants will be given, one for A. C. current generators running in parallel, and another for D. C. current generators and for A. C. current generators which are not in parallel operation.

The method then is as follows:

From Table A pick out the diameter of the wheel corresponding to the given number of revolutions. From Table B (page 390) pick out the constant K_A or K_D, according as the engine is to drive A. C. generators in parallel or A. C. generators not in parallel or D. C. generators. Obtain a new constant, K_1 or K_2, depending on the number of revolutions from the formulas below:

$$K_1 = \left(\frac{100}{\text{R.P.M.}}\right)^4 \times K_A,$$

or

$$K_2 = \left(\frac{100}{\text{R.P.M.}}\right)^3 \times K_D.$$

In turn the constants K_1 or K_2 must be modified in accordance with the amount of variation of energy from the mean during a revolution. As that of the single cylinder is a maximum it will be assumed as unity and K_1 and K_2 must be multiplied by the decimals below corresponding to the type of engine:

Single-cylinder engine	1.00
Tandem-compound engine	.80
Cross-compound engine	.60

This final constant, K_f, multiplied by the kilowatts will give the weight of the wheel in pounds. The effect of the WR^2 of the armature and rotors of the generators is only $\frac{1}{8}$ to $\frac{1}{12}$ of that of the wheel, except in very large sizes. They may therefore be neglected.

Examples.—A tandem-compound engine is direct connected to a 500-kilowatt 60-cycle alternating-current generator, running at 90 revolutions per minute. Find the diameter and weight of the wheel.

From Table A we find that a wheel corresponding to 90 revolutions must have a diameter of 20 feet and from Table B the primary constant, K_A, is 145 for 100 revolutions per minute. Hence for 90 revolutions,

$$K_1 = \left(\frac{100}{90}\right)^4 \times 145 = 220.$$

For a tandem compound,

$$K_f = 220 \times .80 = 176.$$

Total weight of wheel,

$$176 \times 500 = 88{,}000 \text{ pounds.}$$

After finding the weight, reference should be made to the last column of Table A, as the weight should not be less than the tabular amount. In the present case the tabular amount for a 20-foot balance wheel is 32,000 pounds, and hence the weight found, 88,000, may be used. If less than the tabular weight is used the wheels will appear out of proportion and look light.

Example.—A single-cylinder engine is direct connected to a 75-kilowatt direct-current generator running at 120 revolutions per minute. Find the diameter and weight of the wheel.

If we used a rim speed of 5700 feet per minute we should obtain a wheel with a rim section too light to look well. Even

at 4800 feet we shall lower the amount of the radius to obtain a more substantial appearing rim.

From Table A, column 2, the nearest diameter is 12 feet and from Table B, K_D is 185.

For 120 revolutions per minute,

$$K_2 = \left(\frac{100}{120}\right)^3 \times 185 = 107.$$

Total weight of the wheel, $107 \times 75 = 8025$ pounds.

Referring to Table A we find that the minimum weight that should be used for a 12-foot wheel is 12,500 pounds. We must therefore assume a 10- or 11-foot wheel and recalculate.

For a 11-foot wheel,

$$K_f = \left(\frac{100}{120}\right)^3 \times 225 = 130.$$

The weight of the wheel is

$$130 \times 75 = 9750 \text{ pounds.}$$

This is a trifle above the limit for a 11-foot wheel and hence may be used.

TABLE A.*

BELT AND BALANCE WHEELS.

Diameter of Wheel in Feet.	Revolutions per Minute, Rim Speed 4800 Feet per Minute.	Revolutions per Minute, Rim Speed 5700 Feet per Minute.	Face Width in Inches of Belt Wheels.	Average Weight of Belt Wheels in Pounds.	Minimum Weight for *Balance* Wheels in Pounds.
8	191	227	12	4,000	4,500
9	161	201	15	4,500	5,000
10	152	181	20	8,500	8,000
11	139	165	24	9,400	9,500
12	127	151	27	12,000	12,500
13	117	140	30	13,250	15,000
14	109	130	33	14,500	18,000
15	101	121	35	16,500	20,000
16	95	113	37	18,500	24,000
18	85	101	42	25,000	27,000
20	76	91	50	42,000	32,000
22	69	82	60	52,000	65,000
24	63	76			
26	58	70			
28	55	65			
30	51	60			

* *Power.*

TABLE B.*

VALUES OF PRIMARY CONSTANTS.

Dameter of Balance Wheel in Feet.	K_A A.C. Current in Paralle Operation.	K_D D.C. Current and K.C. Current not in Parallel.
10	585	270
11	485	225
12	400	185
13	350	160
14	300	135
15	260	120
16	230	105
18	185	85
20	145	65

Analysis of the Rites Inertia Governor.—The designing of steam-engine governors is the work of a specialist. It involves

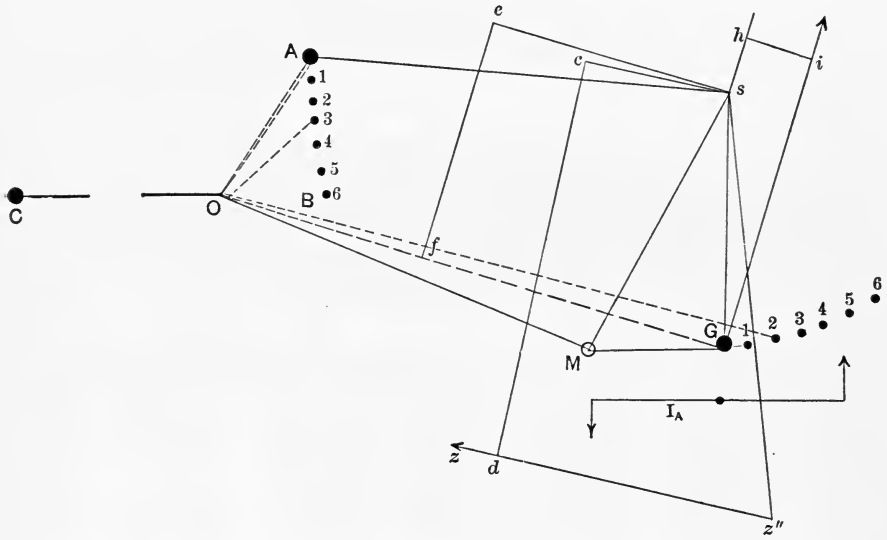

FIG. 211.—The numbers show variable positions of the eccentric center and gravity center at variable cut-off. The dotted lines AO and OG are of variable length. O is the center of the shaft; C is the center of the crank-pin; s is the spindle center; G is the center of gravity of the rotating weights; M is an ideal center of mass placed at a distance equal to the radius of gyration from G; zz'' is the line of action of the spring; OG is the ,line of action of centrifugal force; Gi is the line of action of tangential acceleration; I_a is the angular acceleration couple around G.

* *Power.*

not only special knowledge of the action of such mechanism but also shops and funds for experimentation of no mean proportions. The analysis here given gives not only an insight into the action of this particular mechanism but gives an extended application of various principles of mechanics. In this analysis, there is; first, a rather long preliminary statement of principles; next, the proof of an equation of static equilibrium; then, the proof of an equation of work, or dynamic, equilibrium; and, finally, some equations dealing with angular inertia.

In Fig. 211 let *OC* be the position of the crank; *s*, the position of the spindle center; *A* is the center of the eccentric and the dots indicate positions of *A* giving shorter cut-off; *G* is the center of gravity of the rotating weights of the governing mechanism, and the dots indicate positions of *G* corresponding to the different positions of *A*; *cd* is the lever-arm of the moment about the spindle centers *s*, due to the tension in the spring *z*; *ef* is the lever-arm of the moment of the centrifugal force of the rotating weights *G* about *s*, since it is equal to the perpendicular let fall from *s* on *OG*. See also Fig. 213.

Division of Weights.—The weights are placed in two main divisions:

Reciprocating Parts—valve, valve stem, slide, and the eccentric-rod up to the eccentric.

Rotating Parts—the eccentric, its strap, strap end of the eccentric-rod, and the governor bar, G_1G_2.

The center of gravity of all the rotating weights is intended when the center of gravity of the bar is used in the following discussion. If the eccentric is heavy a material difference is made if its weight be neglected.

Forces Acting through the Eccentric-rod and their Lever-arms.—The force acting in the eccentric-rod at any instant is the resultant of the following forces:

1. The inertia of the reciprocating parts of the valve mechanism;
2. The friction of the valve;
3. The unbalanced pressure on the end of the valve stem, since only one end of it is exposed to steam;
4. The weight of the reciprocating parts in vertical engines.

The eccentric-rod will be treated as if infinite in length. Hence, at all parts of a revolution, it will be parallel to the center line of the engine.

The resultant of all the forces in this rod, at any instant, will pass through the center of the eccentric.

If in Fig. 215 the eccentric center is at the point, a_1, the moment of the force acting in the eccentric-rod, at that instant, about the spindle axis, b_1, will be the product of that force and the lever-arm b_1c_1. At 120°, the lever-arm is almost zero; at the next point, it is negative.

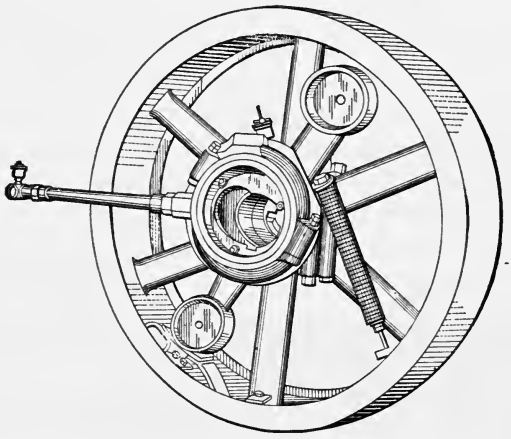

FIG. 212.—Rites-Carpenter Governor.

Algebraic Signs of Forces, Arms, and Moments.—Forces, arms, and moments may be either positive or negative. We shall call *positive* all *moments* which tend to *increase* the eccentricity of the eccentric, i.e., tend to move the center of the eccentric away from the center of the shaft. Movement in the opposite direction will be negative. Positive arms are those which combined with positive forces will produce positive moments. For example, the moment of the spring, z, is positive and the moment of the centrifugal force through OG is negative. Calling the stroke of the valve toward the shaft its instroke and the stroke from the shaft its outstroke, we have:

1. The inertia of the reciprocating parts of the valve mechanism is positive during the first half of the instroke and the

second half of the outstroke. The inertia forces, therefore, produce negative stress during the second half of the instroke and during the first half of the outstroke.

2. When the steam pressure is on the outside of the valve (exhaust inside) the unbalanced pressure on the end of the valve stem will produce a negative stress in the eccentric rod.

3. Friction produces a positive stress on the instroke and a negative stress on the outstroke.

4. The weight of the reciprocating parts (in vertical engines) produces a negative stress during both strokes.

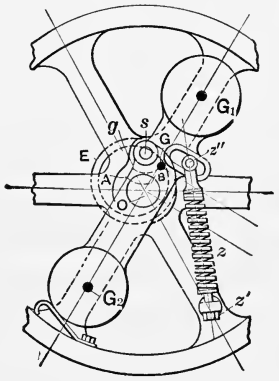

FIG. 213.

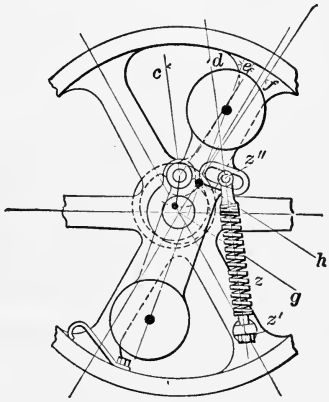

FIG. 214.

Gravity.—The effect of gravity on the reciprocating parts:

1. Will be called zero in horizontal engines;
2. In vertical engines, will be classed as one of the forces acting through the eccentric-rod as above;

The effect of gravity on the rotating parts:

1. The attraction of gravitation being constant the force due to the weight of the rotating parts is constant;

2. The lever-arm of this force will vary from a maximum positive, equal to the radius sG, through zero to a maximum negative equal to $-sG$ and back again during the next semi-revolution. Its effect in a complete revolution is zero and will not affect our static equation of equilibrium to be derived. Its effect in determining the weight of the bar will be discussed. (Figs. 213 and 214.)

Conditions of Static Equilibrium.—If a body is at rest or is moving uniformly, it is in a condition of static equilibrium; hence, the sum of the vertical forces is zero, the sum of the horizontal forces is zero and the sum of the moments of all the forces acting on it is zero. In the case of this governor it will be shown that absolute static equilibrium for a number of consecutive instants is not obtainable owing to the incessant variation of one of the moments. An equation of static equilibrium for a *revolution* can be written by finding the *mean* moment of the forces and arms that vary in amount and sign.

To find this *mean moment* we shall assume the engine to be revolving at constant speed. In the case of the fly-wheel, we found that it had no value in regulating the number of revolutions per minute but had very great value in regulating the speed during a revolution. As the fly-wheel absorbs the excess or deficit of work put into the crank-pin through the connecting-rod, so the governor bar absorbs or gives out work through exceedingly small variations of speed. These variations occur if the engine is supposed to be rotating uniformly. In case the engine *speeds* up or *slows down* an entirely different use of the bar arises through its *angular acceleration* aiding centrifugal force in bringing the eccentric center to a new position. This phase of the use of the bar is discussed last.

The static equation of equilibrium for a revolution involves three moments. These moments are taken around the spindle axis and are as follows:

1. The tension of the spring is constant for a revolution, its lever-arm is constant, and, as the moment of the spring tends to increase the eccentricity, the moment will be called positive.

Let Z = tension of the spring,

cd = the lever arm.

$$\text{Moment of the spring} = +Z(cd).$$

2. At constant speed the centrifugal force of the revolving parts concentrated at G and with an arm ef, would have a constant moment,

$$\text{Centrifugal moment} = -0.00034WRN^2(ef),$$

if W = weight of revolving parts;

R = distance of the center of gravity, G, from the center of the shaft, expressed in feet;

N = number of revolutions per minute.

The negative sign is used as centrifugal force tends to decrease the eccentricity.

3. The third force is the resultant force in the eccentric-rod passing through the eccentric center. Not only is this a variable force but its lever-arm about the spindle, s, is variable.

When we remember, however, that a *point* on the *surface* of a crank-pin *revolves* once around the axis of the crank-pin in one revolution of the latter about the axis of the shaft we perceive that the center of the eccentric and the center of gravity of the rotating weights revolve in circles about the axis of the spindle. The radii of these circles are the distances of those centers from the spindle axis.

To find the mean moment of the third force we shall divide the path of the eccentric center in its revolution around the spindle axis into equal parts, say, twelve. We shall find the amount of the force in the eccentric rod when the eccentric center is at each of these points and multiply the force so found by the perpendicular let fall from the spindle center on the axis of the eccentric-rod produced. The mean of the products found arithmetically is the mean moment required.

To find the resultant pressure acting at each of the twelve positions of the eccentric center, it is best to rectify the path of eccentric center, $2\pi a_1 b_1$, Fig. 215, and at each point lay off the positive or negative pressures as follows (Fig. 217):

The force due to the inertia of reciprocating parts is

$$f = 0.0000284 w r N^2 \cos\theta,$$

where w = weight of reciprocating parts of valve mechanism;

r = eccentricity in *inches*;

N = the number of revolutions per minute;

θ = angle swept through.

By laying off the values of f so found, some such curve as A (Fig. 217) is obtained. Had valve positions instead of eccen-

tric center positions been used two straight lines would have replaced the double curve, A.

The friction of the valve is a variable quantity. It varies with the construction of the valve, the amount of wear and the lubrication. In the diagram, the unbalanced steam pressure on the end of the valve stem, the friction and the weight of the reciprocating parts is indicated by that part of each ordinate included between the curves A and B so that the ordinates of B indicate the resultant pressure in the eccentric-rod at the corresponding positions of the eccentric center. From Fig. 217, we

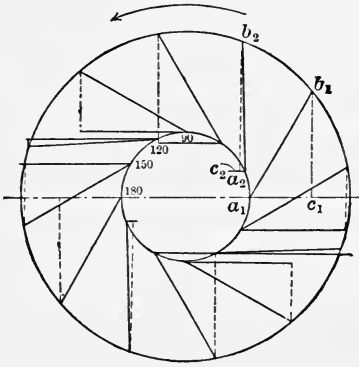

FIG. 215.

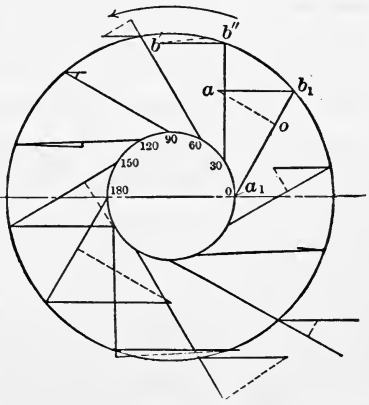

FIG. 216.

see that these ordinates pass through zero value at 90° and 300° approximately.

The corresponding lever-arms are shown in Fig. 215, b_1c_1 being the arm for the force in the eccentric-rod when the eccentric is on the dead center; b_2c_2 being the arm for the force in the rod when the eccentric center is 30° from its dead center, etc.

The next step is to scale off each force and its lever-arm and find the arithmetical product. The mean of all the products is the mean turning moment due to the forces in the eccentric-rod during a revolution. This operation is not performed in the text. We can then write:

Constant *centrifugal moment* = constant *spring moment* + the *mean moment* of the eccentric-rod forces.

To Find the Weight of the Bar to Absorb Unbalanced Work.—The second part of the analysis is devoted to a discussion of a method of finding the weight of the bar to absorb excess or deficit of work caused by the unbalanced pressure in the eccentric-rod and by the weight of the rotating parts. As work is the product of a mean pressure and the distance through which that mean pressure is exerted, it remains to show the distance through which the force in the eccentric-rod and the weight of the rotating parts is exerted.

Work of Eccentric-rod Forces about the Spindle Axis.—Referring to Fig. 216, we see that if ab_1 is the pressure in *the eccentric-rod* when the eccentric is at a_1 then the turning effort of the pressure, ab_1 (about the spindle b_1), is equal to that of a force

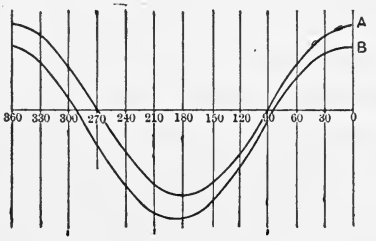

FIG. 217.

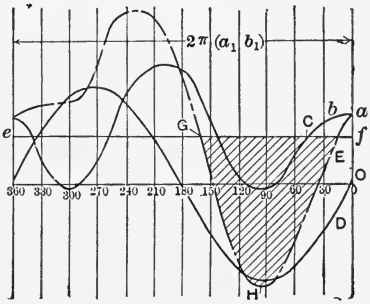

FIG. 218.

ao acting normally to a radius, a_1b_1. Note that the forces and their normal components in the figure are drawn at the spindle centers instead of the eccentric centers to avoid confusion of lines. By taking all the pressures normal to the line joining the eccentric and spindle centers, it is evident that the mean normal pressure multiplied by the circumference of a circle whose radius is a_1b_1 would represent the work done by the resultant eccentric-rod pressure during a revolution. In Fig. 218 the line, *ef*, represents $2\pi a_1b_1$ and the ordinates of the full line curve marked aC represent pressures in the eccentric-rod resolved normally to the lines joining the eccentric and spindle centers. The area between the curve aC and the base $0-360°$ represents the work.

Work of Rotating Weights about the Spindle Axis.—The rotating weights are constant in weight, are concentrated at *G*,

and have variable lever-arms, since the perpendicular let fall from the spindle axis on a *vertical* through G is variable. In order to combine the work of the rotating weights with that of the eccentric-rod forces just found, it is best to lay off the work diagram to the same base line as that of the eccentric-rod forces and to vary the pressures proportionately. Note that the radius of the circular path of G about the spindle axis differs from the radius of the eccentric centers' circle. Therefore take the moment of the rotating weights concentrated at G about the spindle axis for each 30° of revolution of the eccentric center and divide this moment in each case by the distance between the eccentric center and the spindle axis. Lay off the pressure so found at the corresponding degree position on the line 0−360° in Fig. 218 and obtain the curve in full line marked D. The total work done during a revolution is seen to be zero.

Combining the curves, C and D, we obtain the broken-line curve, *EHG*, Fig .218. The mean ordinate of curve C is *of*. The cross-hatched area, *GHE*, is the fluctuation of energy which must be controlled by the governor acting similarly to a fly-wheel.

$$w=\frac{g\Delta E}{\Delta V^2}$$

$$I=\frac{w}{g}\rho^2=35{,}260\frac{\Delta E}{kN^2}.$$

ΔE = area *GHI* in inch-pounds;
I = moment of inertia of governor weights in inch-pounds;
k = desired regulation, viz., greatest allowed variation of speed = k times the mean speed;
N = number of revolutions per minute;
V = velocity of the point at the end of the radius of gyration in feet per second.*

Variation of Load.—Inertia governors depend upon centrifugal force, linear acceleration, and angular acceleration. Variation in the type of governor is due to the variation in the amounts

* See *Power*, Nov. 1906.

of each of the above means of regulation. In one type, for instance, a powerful centrifugal force is developed, aided at change of speed by a powerful inertia effect which is largely linear. In the Rites type, for instance, the centrifugal force action is relatively small, the linear acceleration is also small as the center of gravity G is close to the spindle axis s. The angular acceleration, however, is very powerful and acts as a steadying influence.

Inertia Governor during Change of Speed.—The centrifugal force acts along OG and its moment about the spindle is

$$0.00034WRN^2(SR),$$

if W = weight of revolving parts concentrated at G;
R = radius OG (which is variable) in feet;
N = number of revolutions per minute.

While the speed of the shaft is changing, the above centrifugal force will be augmented by a small amount of linear and by a considerable amount of angular inertia.

If the fly-wheel receives the angular acceleration, ω, the center of mass G receives the linear acceleration $OG\omega$, and the weight W develops the inertia force $I=\frac{w}{g}OG\omega$, acting along Gi with an arm hi about the spindle center s. If this arm is small it is evident that the turning moment will be small.

While the center of gravity of the rotating weights is at G if we take the polar moment of inertia of the mass of the rotating weights about G as a center we can find the polar radius of gyration by dividing the polar moment of inertia by the mass and extracting the square root. Let $MG=k$ be the polar radius of gyration. During change of speed an angular acceleration equal to

$$\frac{W}{g}k^2\omega$$

is developed about G, as shown by the couple marked I_a. As indicated in the figure this inertia effects acts with centrifugal force to hasten the movement of the governor bar.

Counterbalancing.—If the piston, piston-rod, cross-head, connecting-rod, crank-pin, and crank-arms of an engine had no mass, the engine would be in equilibrium under what we may call the static pressures, or pressures not used in causing non-uniform motion of the engine mechanism. As these bodies possess mass and variable velocity, unbalanced forces exist that cause shaking or vibration.

Those of the above-mentioned bodies that have a motion of rotation can be balanced by other rotating bodies of proper mass and radii of action. On the other hand, it is impossible to counterbalance any reciprocating mass by any rotating mass. What can be done, however, is this. Rotating weights can be so placed as to transfer the direction of the unbalanced force from one plane to another. If, for example, horizontal shaking forces are undesirable (from lack of proper means of absorbing them) by means of rotating weights, these forces may be made vertical.

If we consider the connecting-rod as a beam supported at the crank-pin and cross-head pin, the support afforded by each will be inversely proportional to its distance from the center of gravity of the rod. This is true no matter what the inclination of the rod may be. It therefore applies to vertical engines. Therefore (Fig. 55)

W = weight of the connecting-rod;

L = length of the rod in inches;

a = distance the center of gravity of the rod is in inches from the cross-head;

b = distance the center of gravity of the rod is in inches from the crank-pin;

Then $W\frac{a}{L}$ is to be considered as a rotating weight concentrated at the center of the crank-pin and $W\frac{b}{L}$ is to be considered as a reciprocating weight concentrated at the cross-head. If this is done the connecting-rod may be considered as having no mass.

In discussing the effect of the inertia of the reciprocating parts on the distribution of power we assumed that the connecting-rod would have its weight equally distributed between the crank-pin and the cross-head. When the inertia of the mass and not the

weight of the reciprocating parts is considered, the proper division is $W\frac{K^2}{L^2}$, concentrated at the crank-pin and considered as a rotating weight, and $\left(1-\frac{K^2}{L^2}\right)W$, concentrated at the cross-head and considered as a reciprocating weight, K^2 being the squared radius of gyration of the rod about the cross-head axis. In most cases $\frac{K^2}{L^2}=\frac{1}{2}$, and for all practical purposes may be so taken. If the shaking forces are desired, it is a little more accurate to use $W\frac{a}{L}$ and $W\frac{b}{L}$ as the two divisions. (Trans. A. S. M. E., Vol. XXVI.)

Equivalent Weight at the Center of the Crank-pin.—All the various rotating weights with their lever-arms may be reduced to one weight at the center of the crank-pin. For example, let the crank shown in Fig. 219 have a connecting-rod weighing 136

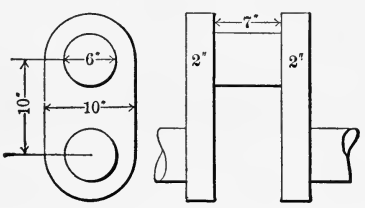

FIG. 219.

pounds with a center of gravity at 55% of its length from the cross-head pin.

Weight of one arm (solid), $\{(10^2\times.78)+(10\times10)\}2\times.28=$ 99.68
" of both arms $=200$
" of crank-pin, $9\times\frac{22}{7}\times7\times.28$ $=$ 55

Moment of all parts about the center of shaft, $200\times5+55\times10=1550$. Dividing by 10″, the distance from the center of the crank-pin to the center of the shaft, and we find that 155 pounds concentrated at the crank-pin would have the same moment. In addition there is 55% the weight of the connecting-rod to be concentrated at the same point or a total of 155 and $75=230$ pounds.

The above weight would have a centrifugal force of $\frac{WV^2}{gR}$.

At 210 revolutions per minute this would be

$$\frac{230}{32}\left(\frac{4\times22\times22\times5\times210\times210}{7\times7\times6\times60\times60}\right)=2900 \text{ lbs.}$$

The horizontal shaking force would be $\frac{WV^2}{gR}\cos\theta=2900\cos\theta$ and the vertical shaking force would be $\frac{WV^2}{gR}\sin\theta=2900\sin\theta$.

A good counterbalance can be obtained by the addition of weights formed by prolonging the crank-arm in single- or overhung-crank engines and prolonging both arms in double-crank arm engines. The product of the added weight and the distance of its center of gravity from the center of the shaft must be 1550 in the above case, or in general the product of the weight and its gravity arm equals the sum of the moments of all the rotating weights.

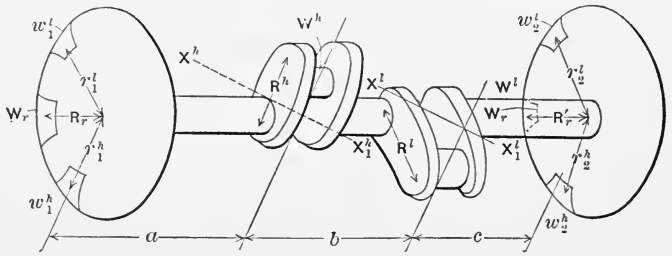

FIG. 220.

In general, rotating weights cannot be balanced by a single rotating weight, as it is not practically possible to put the center of gravity of the counterweight in the plane of revolution of the center of gravity of the unbalanced weights. For equilibrium it is essential that the moments of all the *forces* exerted by the weights about any axis should be zero. In statics, the force exerted by a weight is equal to the weight; in dynamics, the force may be put proportional to the product of the weight and its lever-arm if the comparison is restricted to bodies having the same number of revolutions; if the number of revolutions of the bodies compared differed, then their forces would be proportional to the product of their weight, their lever-arm, and the square of the number of their revolutions, as is apparent from the formula for centrifugal force, $\frac{WV^2}{gR}$.

In Fig. 220, suppose that we wish to counterbalance equivalent weights W^h and W^l concentrated at the crank-pins of a compound engine having two cranks at right angles to one another. Let W^h be balanced by the weights $w_1{}^h$ and $w_2{}^h$ placed opposite the crank-pin as shown. Since all parts of the shaft have the same angular velocity the moment about the axis of the shaft is zero when

$$W^hR^h = w_1{}^hr_1{}^h + w_2{}^hr_2{}^h.$$

But the moments of the centrifugal forces of $w_1{}^h$ and $w_2{}^h$ about the rotating axis $X^hX_1{}^h$ must also be zero to prevent shaking about that axis.

$$(w_1{}^hr_1{}^h)a = w_2{}^hr_2{}^h(b+c).$$

Similarly, $$W^lR^l = w_1{}^lr_1{}^l + w_2{}^lr_2{}^l,$$

and $$w_1{}^lr_1{}^l(a+b) = w_2{}^lr_2{}^l(c).$$

The weights on each wheel may be combined into one weight. Let W_r be the desired resultant weight and R_r its radius (distance of its center of gravity to the axis of shaft). Then

$$W_rR_r = \sqrt{(w_1{}^hr_1{}^h)^2 + (w_1{}^lr_1{}^l)^2}.$$

The direction and magnitude of the product W_rR_r can be easily obtained by laying off $w_1{}^hr_1{}^h$ and $w_1{}^lr_1{}^l$ as the two sides of a right triangle and W_rR_r will be the hypothenuse. The direction in which W_r is to be laid off on the wheel is shown by the angle at the base of the triangle. In a similar manner a single weight may be obtained for the two weights on the other wheel.

Shaking-forces.—The following method may be used in finding the shaking-forces due to the inertia of the reciprocating masses and the centrifugal force of the unbalanced rotating masses as represented by an equivalent weight rotating at the crank-pin center.

In Fig. 221 the force required to accelerate the reciprocating parts in Fig. 205 at every 30 degrees (to a different scale) has been combined with an assumed centrifugal force. The direction in which forces act is indicated by the order of the letters.

In any horizontal engine let Oa_1, Fig. 221, be the centrifugal

force of all the unbalanced rotating parts. It produces a horizontal shaking-force Oc_1 and a vertical shaking-force c_1a_1 at crank-angle a_0Oa_1. Let a_1A_1 be the horizontal shaking-force exerted against the left cylinder-head at this crank-angle. It is equal to $3(d'c)$, Fig. 205. Then OA_1 indicates the shaking-force at the crank-angle a_0Oa_1. Its horizontal component is evidently the sum of Oc_1 and a_1A_1. a_0A_0 and a_6A_6 are equal to HI and $5J$ respectively to the new scale (Fig. 205.)

Suppose counterweights are added in such manner that their centrifugal force is equivalent to a force b_2O acting at the crank-pin. This force not only counteracts the centrifugal force of the unbalanced rotating parts Oa_2, but also alters the horizontal and vertical components of the shaking-forces due to the reciprocating parts. The amount of these alterations is evident when we join b_1 and A_1, b_2 and A_2, etc. For the previous shaking-force OA_1 is now to be combined with the introduced force b_1O, and the result is a shaking-force b_1A_1, OA_2 is to be combined with b_2O, giving b_2A_2. Lay off OB_1, OB_2, etc., parallel to b_1A_1, b_2A_2, etc. Join B_0, B_1, B_2, etc. It is accidental that A_2 falls on the line Ob_1.

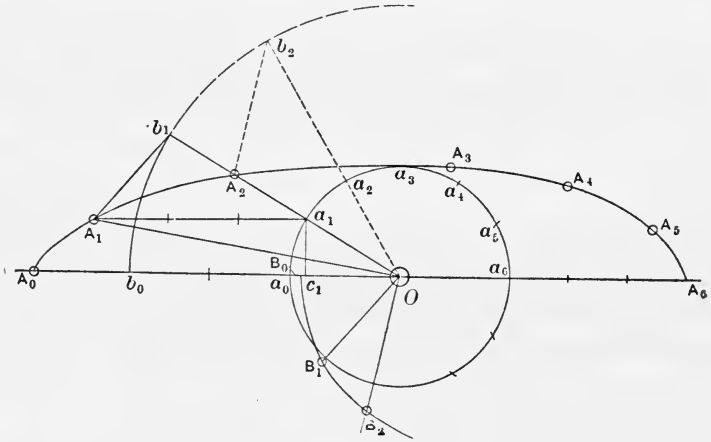

FIG. 221.

It is well to note the peculiar direction taken by OB_1 and OB_2, etc., with reference to the crank-positions to which they belong. The effect of increasing and decreasing the value of b_1O should be noted. In the addition of counterweights it must be remembered that their effect varies with the square of the revolutions. If a balance exists at one speed it will exist at all speeds; the shaking-

force only varies with some function of the square of the speed of the parts out of balance.

It is evident that these circular diagrams may be laid off in the following way also. Rectify the crank-circle; lay off the horizontal or vertical components of the shaking-forces at right angles to the rectified circle at the division point indicated by the crank position.

For a single-crank horizontal engine without counterbalance the horizontal shaking-forces are a maximum at the ends of the stroke, and are zero just before and just after the 90-degree position.

For two cranks 180 degrees apart, with infinite rods the inertia of the reciprocating masses, if of equal weight, would balance one another; with finite rods this is not the case, and there are two maxima and two minima. The shaking, however, is much less than in the single-crank engine.

For a triple-crank engine of equal weights of reciprocating parts for each engine the sum of the inertia effects, no matter what the length of the connecting-rod, is zero. This can be shown by adding f_1, f_2, and f_3 in the following equations and showing that the sum is zero.

$$f_1 = \frac{WV^2}{gAR}\left(\cos\theta + \frac{R}{L}\cos 2\theta\right),$$

$$f_2 = \frac{WV^2}{gAR}\left(\cos(\theta + 120°) + \frac{R}{L}\cos 2(\theta + 120°)\right),$$

$$f_3 = \frac{WV^2}{gAR}\left(\cos(\theta + 240°) + \frac{R}{L}\cos 2(\theta + 240°)\right).$$

The ordinary form of two engines with cranks at right angles has smaller shaking-forces than a single engine of equal size, but greater shaking-forces than any of the other types mentioned. The shaking-force diagrams should not be confused with the tangential-force diagrams.

Determination of Angular Displacement.—To insure the satisfactory operation of two alternating-current generators when working in parallel, the maximum amount of angular variation or displacement should not exceed 2.5 degrees of phase departure from the mean position (shown by a theoretical engine moving with uniform velocity) during any revolution.

Having designed all the reciprocating and rotating parts and their counterweights, and having determined their centers of gravity, it is necessary to calculate the phase departure of an engine intended for work in the class described above.

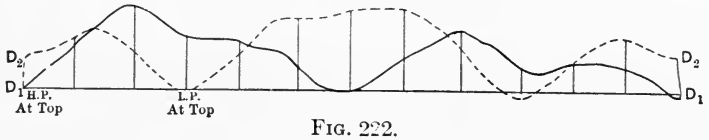

FIG. 222.

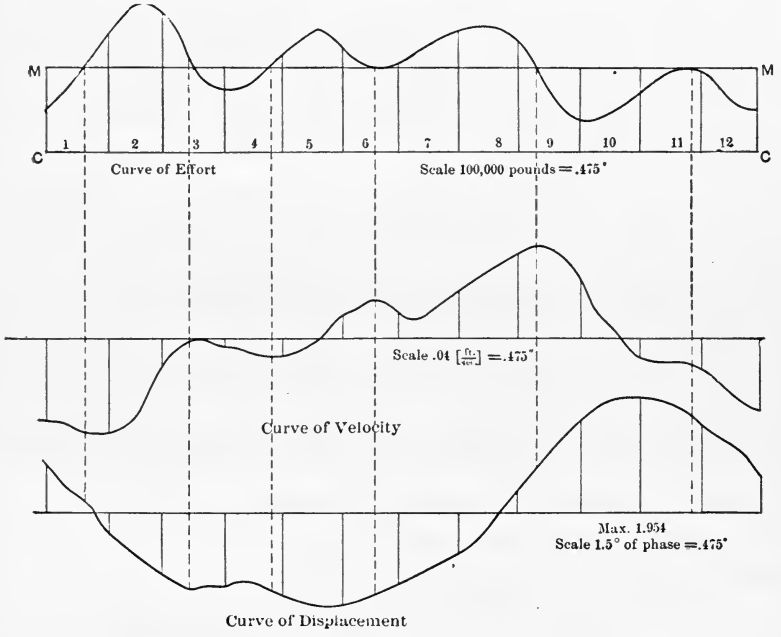

FIGS. 223, 224, 225.

The following description is taken from Vol. XXII, Trans. A. S. M. E. The method of obtaining the crank diagram will be omitted, as the only practical difference between the author's method and our own is that he uses the total pressure on the piston of each engine, and we used the pressure per square inch in

obtaining the diagram of crank effort. Twelve crank positions are used as in Fig. 205. Fig. 222 represents the individual and Figs. 223–225 the combined cards, MM being the line of mean effort.

"We will now consider the equivalent mass of the rotating parts of the engine concentrated at the crank-pin, and as having no other velocity than that produced by the positive and negative forces represented by those portions of the curve of crank effort on either side of the line MM. For convenience in estimating we will assume that the applied force is uniform within each of the twelve spaces; i.e., this tangential force for each space, expressed in pounds above or below the normal MM, is equal to the mean height of each space above or below the line MM and is exhibited in Table A, page 408.

" The velocity gained or lost during each twelfth of a revolution is deduced as follows:

" The equivalent weight of the revolving parts at crank radius (2.5′) equals 3,367,000 pounds. The velocity of the crank-pin is $\frac{2.5' \times 2 \times 3.1416 \times 75 \text{ revs.}}{60} = 19.63$ feet per second. As the number of revolutions per second equals $\frac{75}{60} = 1.25$, the number of spaces traversed per second equals 15, and the time for each space .0667 second. The mass of the revolving parts equals $\frac{W}{g} = \frac{3{,}367{,}000}{32.2} = 104{,}584$. Hence $\frac{T}{M} = \frac{.06666}{104{,}584} = .000{,}000{,}637{,}4$ equals the acceleration for a force of one pound. Therefore $\frac{T}{M} \times F$ equals the velocity gained or lost during each interval, as shown in column A, Table A, page 408.

"Now, if the velocity of the pin be assumed normal at the beginning of the stroke, the velocity attained up to the end of the various spaces will be equal to the algebraic sum of the velocities gained during each of the preceding spaces. These velocities attained up to the end of each space are shown in column V''. As the actual velocity of the crank-pin at the beginning of the stroke was not normal as assumed, it becomes necessary to correct the values of

TABLE A.

Space Number.	F Tangential Force in Pounds Above or Below Average Pressure. F = mean height of each space.	A Velocity Gained During Each $\frac{1}{12}$ of a Revolution. $A = \frac{T}{M} \times F$.	V'' Velocity Attained up to the End of Divisions, Assuming 0 at the Beginning of Stroke.	V' V'' Corrected to Bring 0 to its Proper Place. $V' = V'' - .033$.	V Average Velocity During Each Interval.	S'' Space Actually Passed Over During Each Interval.	S' Displacement, Assuming 0 at the Beginning of Stroke.	S S' Corrected to Bring 0 to its Proper Place. $S = S' + 0.0019$.	Degrees of Arc. $S \times 22.92$. 1 foot = 22.92 degrees	Degrees of Phase. There are 40 Poles on the Generator, consequently there are 20 Changes of Phase.
1	−13,500	−.0086	−.0086	−.0416	−.0375	−.00250	−.00250	−.00060	−.0137	−0.274
2	+57,000	+.0363	+.0277	−.0053	−.0261	−.00174	−.00424	−.00234	−.0536	−1.072
3	+ 4,500	+.0029	+.0306	−.0024	−.0012	−.00008	−.00432	−.00242	−.0555	−1.110
4	−10,500	−.0067	+.0239	−.0091	−.0072	−.00048	−.00480	−.00290	−.0665	−1.330
5	+30,000	+.0191	+.0430	+.0100	−.0015	−.00010	−.00490	−.00300	−.0688	−1.376
6	+ 1,500	+.0009	+.0439	+.0109	+.0133	+.00089	−.00401	−.00211	−.0484	−0.968
7	+21,000	+.0134	+.0573	+.0243	+.0155	+.00103	−.00298	−.00108	−.0247	−0.494
8	+30,000	+.0191	+.0764	+.0434	+.0334	+.00223	−.00075	+.00115	+.0264	+0.528
9	−30,000	−.0191	+.0573	+.0243	+.0390	+.00260	+.00185	+.00375	+.0859	+1.718
10	−48,000	−.0306	+.0267	−.0063	+.0059	+.00038	+.00224	+.00414	+.0949	+1.898
11	−13,500	−.0086	+.0181	−.0149	−.0097	−.00065	+.00159	+.00349	+.0800	+1.600
12	− 8,500	−.0181	−.0000	−.0330	−.0234	−.00156	+.00003	+.00193	+.0442	+0.884

V'' accordingly. The integrated sum of the velocities above and below normal attained during one revolution must be zero, therefore the correction to be applied equals the algebraic sum of the velocities V'' divided by the number of spaces (twelve in this case). Thus the correction is .033, and this amount must be deducted from the values of V'' in order to arrive at the true velocity attained up to the end of the successive intervals. With these true velocities, given in column V' of Table A, as ordinates, plot the curve of velocity V' (Fig. 224), where BB represents the mean velocity of the pin.

"From the curve of velocity V' (Fig. 224), ascertain the average velocity above or below the mean velocity, BB, during each space, shown in column V of the table. With these velocities given, the space actually passed over during each interval can be readily calculated by multiplying the values of V by .0667, the time for one space. The figures in column S'' were deduced in this way.

"If the position of the pin be assumed normal at the beginning of the stroke, its distance from normal up to the end of the respective intervals will be equal to the algebraic sum of the spaces actually passed over, ahead of or behind the mean position, during each interval. Therefore the figures in column S' are equal to the integrated sum of the preceding figures in column S''. As the position of the crank-pin at the beginning of the stroke was not zero, as assumed, a correction must be applied to the values of S'. Since the integrated sum of the distances ahead of or behind the mean position must be equal to zero, the value of the correction is equal to the ratio of the algebraic sum of the values of S' to the number of spaces. The value of the correction is .0019, and is to be added to the values of S' to get the true displacement or distance from normal of the pin at the end of each interval, the figures for same being shown in column S. Since one foot corresponds to 22.92 degrees of arc, measured on the crank-pin circle, the number of degrees of arc from normal equals the product of the true distances in feet from normal (column S) by 22.92. The number of degrees of arc from normal deduced in this way are shown in the next to the last column of Table A. Finally, as there are 40 poles on the generator, there will be 20 cycles or changes of phase per revolution, therefore one degree of arc equals 20 degrees of

phase, and the displacement (shown in the last column of table) at the end of each interval may be calculated by multiplying the corresponding degrees of arc by 20. With the values of the displacement in degrees of phase from normal as ordinates, the curve of displacement (Fig. 225) was plotted, in which *CC* represents the mean position of the crank-pin."

CHAPTER XIV.

STEAM-ENGINE TESTS.

Rules for Conducting Steam-engine Tests.—Code of 1902 A. S. M. E.* A large part of this code has been given in the text (marked †). Such parts will not be repeated.

I. *Object of the Test.*—Ascertain at the outset the specific object of the test, whether it be to determine the fulfilment of a contract guarantee, to ascertain the highest economy obtainable, to find the working economy and defects under conditions as they exist, to ascertain the performance under special conditions, to determine the effect of changes in the conditions, or to find the performance of the entire boiler and engine plant, and prepare for the test accordingly.

No specific rules can be laid down regarding many of the preparations to be made for a test, so much depends upon the local conditions; and the matter is one which must be left mainly to the good sense, tact, judgment, and ingenuity of the party undertaking it. One guiding principle must ever be kept in mind, namely, to obtain data which shall be thoroughly reliable for the purposes in view. If questions of contract are to be settled, it is of the first importance that a clear understanding be had with all the parties to the contract as to the methods to be pursued—putting this understanding, if necessary, in writing—unless these are distinctly provided for in the contract itself. The preparations for the measurement of the feed-water and of the various quantities of condensed water in the standard heat-unit test should be made in such manner as to change as little as possible the working conditions and temperatures of the plant.

---

* Trans. A. S. M. E., 1903.

II. *General Condition of the Plant.*—Examine the engine and the entire plant concerned in the test; note its general condition and any points of design, construction, or operation which bear on the objects in view. Make a special examination of the valves and pistons for leakage by applying the working pressures with the engine at rest, and observe the quantity of steam, if any, blowing through per hour.

If the trial has for an object the determination of the highest efficiency attainable, the valves and pistons must first be made tight and all parts of the engine and its auxiliaries, and all other parts of the plant concerned, should be put in the best possible working condition.

The method of testing the valves and pistons for leakage in a Corliss engine, or one in which the admission-valves can be operated independently of the exhaust-valves, is as follows: Close the two steam-valves, open the two indicator-cocks, and admit a full pressure of steam into the chest by opening the throttle-valve. The movement of the starting-bar, first one way and then the other, so as to close one exhaust-valve and then the other, causes the leakage through the steam-valves to escape from the open indicator-cock, where it becomes visible. The quantity of leakage is judged by the force of the current of steam blowing out.

To test the exhaust-valves and piston, the best method is to block the fly-wheel, so that the piston will be at a short distance from the end of the stroke, and turn on the steam. The leakage escapes to the exhaust-pipe, and can be observed at the open atmospheric outlet. If the outlet is not visible, and there is a valve in the exhaust-pipe, this can be shut and the indicator-cock opened, thereby deflecting the steam which leaks and causing it to appear at the indicator-cock. In the case of a condensing engine where no atmospheric pipe is provided, and there is no opening that can be made in the exhaust-pipe in front of the condenser, some idea can be obtained in regard to the amount of leakage by observing how rapidly the condenser is heated. It is well to make these tests with the piston in different positions so as to cover the whole range of the length of the stroke.

Another but more approximate method of testing leakage is called the "time method." Instead of observing the steam that

actually blows through the valves or pistons to be tested, they are subjected to full steam-pressure, and when the parts are thoroughly heated, the throttle-valve is shut and the length of time observed which is required for the pressure to disappear. In testing the piston and exhaust-valves, the fly-wheel is blocked as before, and, preferably, an indicator is attached, and a line drawn on a blank card at intervals of, say, one-quarter of a minute after the valve is shut, thereby making a record of the fall of pressure. In a tight engine the fall of pressure is slow, whereas in a leaky engine it is sometimes very rapid. The relative condition of the engine as compared with a tight engine must be judged by an observer, who must, of course, have had experience in tests of this kind on engines in various conditions.

The leakage of a piston can always be determined by removing the cylinder-head and observing what blows through the open end with the pressure of steam behind it. The advantage of the "time method" is that it saves the labor and time required in removing the cylinder-head and replacing it, which, in cases of large engines, is considerable.

Leakage tests of single-valve engines cannot be made as satisfactorily as those of the Corliss type and other four-valve engines. The best that can be done as regards the valve is to place it at or near the center of its travel, covering both ports, and then make the test under full pressure. The valve and piston can be tested as a whole by blocking the fly-wheel and opening the throttle-valve in the same way as in other engines.

In testing compound engines for leakage, the work is somewhat simplified in case of any one cylinder as compared with a single engine. For example, leakage of the high-pressure cylinder can be revealed by opening the indicator-cock on the proper end of the low-pressure cylinder, the steam-valve of that cylinder being open. The test of leakage of the low-pressure exhaust-valves and piston when the "time method" is used can be based on the indications of the receiver gage instead of using an indicator. In that case the fall of pressure due to leakage is read from the gage.

The tests thus far referred to are qualitative, and not quantitative. It is practical in some cases to determine the quantity of

leakage under any set of conditions by collecting the steam which passes through, condensing it and weighing it. This can be readily done when there is a surface condenser, and it can be done in the absence of such a condenser by attaching a small pipe to the exhaust and carrying the steam which escapes into a tank of water and condensing it. How much dependence can be placed upon the results of such a quantitative test as showing the actual quantity of leakage which occurs when the valves and pistons are in motion must be left to the judgment of the person who makes the test.

When full information is desired, it is well to test the valves and pistons in several different positions, so as to cover the whole range of action.

In Corliss engines the leakage of the piston with the engine in operation can be observed by removing the cylinder-head, disconnecting the steam- and exhaust-valves at the head end, and setting the engine to work with steam admitted at the crank end.

III. *Dimensions, etc.*—Measure or check the dimensions of the cylinders in any case, this being done when they are hot. If they are much worn, the average diameter should be determined. Measure also the clearance, which should be done if possible by filling the spaces with water previously measured, the piston being placed at the end of the stroke. If the clearance cannot be measured directly, it can be determined approximately from the working drawings of the cylinder.

Measure also the dimensions of auxiliaries and accessories, also those of the boilers so far as concerned in attaining the objects. It is well to supplement these determinations with a sketch or sketches showing the general features and arrangement of the different parts of the plant.

To measure the clearance by actual test, the engine is carefully set on the center, with the piston at the end where the measurement is to be taken. Assuming, for example, a Corliss engine, the best method to pursue is to remove the steam-valve so as to have access to the whole steam-port, and then fill up the clearance space with water, which is poured into the open port through a funnel. The water is drawn from a receptacle containing a sufficient quantity which has previously been measured. When the whole space, including the port, is completely filled, the quantity left is measured,

and the difference shows the amount which has been poured in. The measurement can be most easily made by weighing the water and the corresponding volume determined by calculation, making proper allowance for its temperature. The proportion required is the volume in cubic inches thus found, divided by the volume of the piston displacement, also in cubic inches, and the result expressed as a decimal. In this test care should be taken that no air is retained in the clearance space when it is filled with water.

The only difficulty which arises in measuring the clearance in this way is that occurring when the exhaust-valves and piston are not tight, so that, as the water is poured in, it flows away and is lost. If the leakage is serious, no satisfactory measurement can be made, and it is better to depend upon the volume calculated from the drawing. If not too serious, however, an allowance can be made by carefully observing the length of time consumed in pouring in the water; then, after a portion of the water has leaked out, fill up the space again, taking the time, and measuring the quantity thus added, determining in this way the rate at which the leakage occurs. Data will thus be obtained for the desired correction.

IV. *Coal.*—When the trial involves the complete plant, embracing boilers as well as engines, determine the character of coal to be used. The class, name of the mine, size, moisture, and quality of the coal should be stated in the report. It is desirable, for purposes of comparison, that the coal should be of some recognized standard quality for the locality where the plant is situated. For New England and that portion of the country east of the Alleghany Mountains good anthracite egg coal containing not over 10% ash, and semi-bituminous Clearfield (Pa.), Cumberland (Md.), and Pocahontas (Va.) coals are thus regarded. West of the Alleghany Mountains, Pocahontas (Va.) and New River (W. Va.) semi-bituminous and Youghiogheny or Pittsburg bituminous coals are recognized as standards.

V. *Calibration of Instruments.*—All instruments and apparatus should be calibrated and their reliability and accuracy verified by comparison with recognized standards. Such apparatus as is liable to change or become broken during a test, as gages, indicator-springs, and thermometers, should be calibrated before and after the test. The accuracy of scales should be verified by standard

weights. When a water-meter is used special attention should be given to its calibration, verifying it both before and after the trial, and, if possible, during its progress, the conditions in regard to water-pressure and rate of flow being made the same in the calibrations as exist throughout the trial.

(*a*) Gages. For pressures above the atmosphere, one of the most convenient, and at the same time reliable, standards is the dead-weight testing apparatus which is manufactured by many of the prominent gage-makers. It consists of a vertical plunger nicely fitted to a cylinder containing oil or glycerine, through the medium of which the pressure is transmitted to the gage. The plunger is surmounted by a circular stand on which weights may be placed, and by means of which any desired pressure can be secured. The total weight, in pounds, on the plunger at any time, divided by the average area of the plunger and of the bushing which receives it, in square inches, gives the pressure in pounds per square inch.

Another standard of comparison for pressure is the mercury column. If this instrument is used, assurance must be had that it is properly graduated with reference to the ever-varying zero-point, that the mercury is pure, and that the proper correction is made for any difference of temperature that exists, compared with the temperature at which the instrument was graduated.

For pressures below the atmosphere an air-pump or some other means of producing a vacuum is required, and reference must be made to a mercury gage. Such a gage may be a U tube having a length of 30 inches or so, with both arms properly filled with pure mercury.

(*b*) Thermometers. Standard thermometers are those which indicate 212° F. in steam escaping from boiling water at the normal barometrical pressure of 29.92 inches, the whole stem up to the 212-degree point being surrounded by the steam; and which indicate 32° F. in melting ice, the stem being likewise completely immersed up to the 32-degree point, and which are calibrated for points beyond and between these two reference points. We recommend, for temperatures between 212° and 400° F., that the comparison of the thermometer be made with the temperature given in Regnault's Steam Tables, the method required

being to place it in a mercury well surrounded by saturated steam under sufficient pressure to give the desired temperature. The pressure should be accurately determined, as pointed out in section (*a*), and the thermometer should be immersed to the same extent as it is under its working condition.

Thermometers in practice are seldom used with the stems fully immersed, consequently when they are compared with the standard the comparison should be made under like conditions, and practically under the working conditions, whatever those happen to be.

If pyrometers of any kind are used, they should be compared with a mercury thermometer within its range, and if extreme accuracy is required, with an air-thermometer, or a standard based thereon, at higher points, care being taken that the medium surrounding the pyrometer, be it air or liquid, is of the same uniform temperature as that surrounding the standard.

(*c*) Indicator-springs. See text.

(*d*) Water-meters. A good method of calibrating a water-meter is the following, reference being made to Fig. 226:

Two tees, *A* and *B*, are placed in the feed-pipe, and between them two valves, *C* and *D*. The meter is connected between the outlets of the tees *A* and *B*. The valves *E* and *F* are placed one on each side of the meter. When the meter is running, the valves *E* and *F* are opened, and the valves *C* and *D* are closed. Should an accident happen to the meter during the test, the valves *E* and *F* may be closed and the valves *C* and *D* opened, so as to allow the feed-water to flow directly into the boiler. A small bleeder, *G*, is placed between the valves *C* and *D*. The valve *G* is opened when the valves *C* and *D* are closed, in order to make sure that there is no leakage. A gage is attached at *H*. When the meter is tested, the valves *C*, *D*, and *F* are closed and the valves *E* and *I* are opened. The water flows from the valve *I* to a tank placed on weighing-scales. In testing the meter the feed-pump is run at the normal speed, and the water leaving the meter is throttled at the valve *I* until the pressure shown by the gage *H* is the same as that indicated when the meter is running under the normal conditions. The piping leading from the valve *I* to the tank is arranged with a swinging joint, consisting merely

of a loosely fitting elbow, so that it can be readily turned into the tank or away from it. After the desired pressure and speed have been secured, the end of the pipe is swung into the tank the

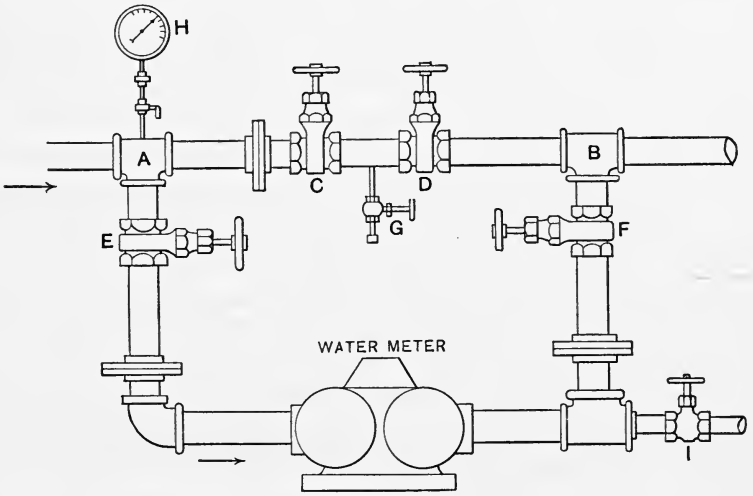

FIG. 226.

instant that the pointer of the meter is opposite some graduation mark on the dial, and the water continues to empty into the tank while any desired number of even cubic feet are discharged, after which the pipe is swung away from the tank. The tests should be made by starting and stopping at the same graduation mark on the meter-dial, and continued until at least 10 or 20 cubic feet are discharged for one test. The water collected in the tank is then weighed.

The water passing the meter should always be under pressure in order that any air in the meter may be discharged through the vents provided for this purpose. Care should be taken that there is no air contained in the feed-water. Should the feed-water pump draw from a hot-well, the height of the water in the hot-well must never be as low as the suction-pipe of the pump. In case the speed of the feed-pump cannot be regulated, as occurs in some cases where it is driven directly from the engines, a by-pass should be connected with the pipe leading from the pump to allow some of the water to flow back into the hot-well, if the

pump lowers the water in the hot-well beyond a given mark, The meter should be tested both before and after the engine trial, and several tests of the meter should be made in each case in order to obtain confirmative results. It is well to make preliminary tests to determine whether the meter works satisfactorily before connecting it up for an engine trial. The results should agree with each other for two widely different rates of flow.

VI. *Leakages of Steam, Water, etc.*—In all tests except those of a complete plant made under conditions as they exist, the boiler and its connections, both steam and feed, as also the steam-piping leading to the engine and its connections, should, so far as possible, be made tight. If absolute tightness cannot be obtained (in point of fact it rarely can be), proper allowance should be made for such leakage in determining the steam actually consumed by the engine. This, however, is not required where a surface condenser is used and the water consumption is determined by measuring the discharge of the air-pump. In such cases it is necessary to make sure that the condenser is tight, both before and after the test, against the entrance of circulating water, or if such occurs to make proper correction for it, determining it under the working difference of pressure. Should there be excessive leakage of the condenser it should be remedied before the test is made. When the steam consumption is determined by measuring the discharge of the air-pump, any leakage about the valve or piston-rods of the engine should be carefully guarded against.

Make sure that there is no leakage at any of the connections with the apparatus provided for measuring and supplying the feed-water which could affect the results. All connections should, so far as possible, be visible and be blanked off, and where this cannot be done, satisfactory assurance should be obtained that there is no leakage either in or out.

It is not always necessary to blank off a connecting-pipe to make sure that there is no leakage through it. If satisfactory assurance can be had that there is no chance for leakage, this is sufficient. For example, where a straightway valve is used for cutting off a connecting pipe, and this valve has double seats with a hole in the bottom between them, this being provided with a plug or pet-cock, assurance of the tightness of the valve when

closed can be had by removing the plug or opening the cock. Likewise, if there is a drain-pipe beyond the valve, the fact that no water escapes there is sufficient evidence of the tightness of the valve. The main thing is to have positive evidence of the tightness of the connections, such as may be obtained by the means suggested above; but where no positive evidence can be obtained, or where the leakage that occurs cannot be measured, it is of the utmost importance that the connections should be broken and blanked off.

Leakage of relief-valves which are not tight, drips from traps, separators, etc., and leakage of tubes in the feed-water heater must all be guarded against, measured, and allowed for.

It is well, as an additional precaution, to test the tightness of the feed-water pipes and apparatus concerned in the measurement of the water by running the pump at a slow speed for, say, fifteen minutes, having first shut the feed-valves at the boilers. Leakage will be revealed by the disappearance of water from the supply-tank. In making this test, a gage should be placed on the pump discharge in order to guard against undue or dangerous pressure.

To determine the leakage of steam and water from a boiler and steam-pipes, etc., the *water-gage* glass method may be satisfactorily employed. This consists in shutting off all the feed-valves (which must be known to be tight) or the main feed-valve, thereby stopping absolutely the entrance or exit of water at the feed-pipes to the boilers; then maintaining the steam-pressure (by means of a very slow fire) at a fixed point, which is approximately that of the working pressure and observing the rate at which the water falls in the gage-glasses. It is well in this test, as in other work of this character, to make observations every ten minutes, and to continue them for such a length of time that the differences between successive readings attain a constant rate. Generally the conditions will have become constant at the expiration of fifteen minutes from the time of shutting the valves, and thereafter the fall of water due to leakage of steam and water becomes approximately constant. It is usually sufficient after this time to continue the test for one hour, thereby taking six ten-minute readings. When this test is finished, the amount of leakage is determined by calculating the volume of water which has disappeared, using the area

of the water-level and the depth shown on the glass, making due allowance for the weight of one cubic foot of water at the observed temperature. If possible, the gage-glass for this test should be attached close to the boiler.

If there is opportunity for much condensation to occur and collect in the steam-pipe during the leakage test, the quantity should be determined as closely as desirable and properly allowed for.

In making a test of an engine where the steam consumption is determined from the amount of water discharged from a surface condenser, leakage of the piston-rods and valve-rods should be guarded against; for if these are excessive, the test is of little use, as the leakage consists partly of steam that has already done work in the cylinder and of water condensed from the steam when in contact with the cylinder. If such leakage cannot be prevented, some allowance should be made for the quantity thus lost. The weight of water as shown at the condenser must be increased by the quantity allowed for this leakage.

VII. *Duration of Test.*—The duration of a test should depend largely upon its character and the objects in view. The standard heat test of an engine, and likewise a test for the simple determination of the feed-water consumption, should be continued for at least five hours, unless the class of service precludes a continuous run of such duration. It is desirable to prolong the test the number of hours stated to obtain a number of consecutive hourly records as a guide in analyzing the reliability of the whole.

Where the water discharged from the surface condenser is measured for successive short intervals of time, and the rate is found to be uniform, the test may be of a much shorter duration than where the feed-water is measured to the boiler. The longer the test with a given set of conditions, the more accurate the work, and no test should be so short that it cannot be divided into several intervals which will give results agreeing substantially with each other.

The commercial test of a complete plant, embracing boilers as well as engine, should continue at least one full day of twenty-four hours, whether the engine is in motion during the entire time or not. A continuous coal test of a boiler and engine should be of at

least ten hours' duration or the nearest multiple of the interval between times of cleaning fires.

VIII. *Starting and Stopping a Test.*—(*a*) Standard Heat Test and Feed-water Test of Engine. The engine having been brought to the normal condition of running, and operated a sufficient length of time to be thoroughly heated in all its parts, and the measuring-apparatus having been adjusted and set to work, the height of water in the gage-glasses of the boilers is observed, the depth of water in the reservoir from which the feed-water is supplied is noted, the exact time of day is observed, and the test held to commence. Thereafter the measurements determined upon for the test are begun and carried forward until its close. If practicable, the test may be commenced at some even hour or minute, but it is of the first importance to begin at such time as reliable observations of the water heights are obtained, whatever the exact time happens to be when these are satisfactorily determined. When the time for the close of the test arrives, the water should, if possible, be brought to the same height in the glasses and to the same depth in the feed-water reservoir as at the beginning, delaying the conclusion of the test if necessary to bring about this similarity of conditions. If differences occur the proper corrections must be made.

Care should be taken in cases where the activity of combustion in the boiler furnaces affects the height of water in the gage-glasses that the same condition of fire and drafts are operating at one time as at the other. For this reason it is best to start and stop a test without interfering with the regularity of the operation of the feed-pump, provided the latter may be regulated to run so as to supply the feed-water at a uniform rate. In some cases where the supply of feed-water is irregular, as, for example, where an injector is used of a larger capacity than is required, the supply of feed-water should be temporarily shut off.

It is important to use great care in obtaining the average height of water in the glasses, taking sufficient time to satisfactorily judge of the full extent of the fluctuation of the water-line and thereby its mean position. It is important also to refrain from blowing off the water column or its connecting pipes either during the progress of the test or for a period of an hour or more prior

to its beginning. Such blowing off changes the temperature of the water within and thereby affects its specific gravity and height.

To mark the height of water in a gage-glass in a convenient way, a paper scale mounted on wood and divided into tenths of inches may be placed behind it or at its side.

(*b*) Complete Boiler and Engine Test. For a continuous running test of combined engine or engines, and boiler or boilers, the same directions apply for beginning and ending the feed-water measurements as that just referred to under section (*a*). The time of beginning and ending such a test should be the regular time of cleaning the fires, and the exact time of beginning and ending should be the time when the fires are fully cleaned, just preparatory to putting on fresh coal. In cases where there are a number of boilers, and it is inconvenient or undesirable to clean all the fires at once, the time of beginning the test should be deferred until they are all cleaned and in a satisfactory state, all the fires being then burned down to a uniformly thin condition, the thickness and condition being estimated and the test begun just before firing the new coal previously weighed. The ending of the test is likewise deferred until all the fires are satisfactorily cleaned, being again burned down to the same uniformly thin condition as before, and the time of closing being taken just before replenishing the fires with new coal.

For a commercial test of a combined engine and boiler, whether the engine runs continuously for the full twenty four-hours of the day or only a portion of the time, the fires in the boilers being banked during the time when the engine is not in motion, the beginning and ending of the test should occur at the regular time of cleaning fires, the method followed being that already given. In cases where the engine is not in continuous motion, as, for example, in textile mills, where the working-time is ten or eleven hours out of the twenty-four, and the fires are cleaned and banked at the close of the day's work, the best time for starting and stopping a test is the time just before banking, when the fires are well-burned down and the thickness and condition can be most satisfactorily judged. In these, as in all other cases noted, the test should be begun by observing the exact time, the thickness and condition of the fires on the grates, the height of water in the gage-glasses of

the boilers, the depth of water in the reservoir from which the feed-water is supplied, and other conditions relating to the trial, the same observations being again taken at the end of the test, and the conditions in all respects being made as nearly as possible the same as at the beginning.

IX. *Measurement of Heat-units Consumed by the Engine.*—The measurement of the heat consumption requires the measurement of each supply of feed-water to the boiler, that is, the water supplied by the main feed-pump, that supplied by auxiliary pumps, such as jacket-water, water from separators, drips, etc., and water supplied by gravity or other means; also the determination of the temperature of the water supplied from each source, together with the pressure and quality of the steam.

The temperatures at the various points should be those applying to the working conditions. The temperature of the feed-water should be taken near the boiler. This causes the engine to suffer a disadvantage from the heat lost by radiation from the pipes which carry the water to the boiler, but it is, nevertheless, advisable on the score of simplicity. Such pipes would therefore be considered a portion of the engine-plant. This conforms with the rule already recommended for the tests of pumping-engines, where the duty per million heat-units is computed from the temperature of the feed-water taken near the boiler. It frequently happens that the measurement of the water requires a change in the usual temperature of supply. For example, where the main supply is ordinarily drawn from a hot-well, in which the temperature is, say, 100° F., it may be necessary, owing to the low level of the well, to take the supply from some source under a pressure or head sufficient to fill the weighing-tanks used, and this supply may have a temperature much below that of the hot-well, possibly as low as 40° F. The temperature to be used is not the temperature of the water as weighed in this case, but that of the working temperature of the hot-well. The working temperature in cases like this must be determined by a special test and included in the log-sheets.

In determining the working temperatures, the preliminary or subsequent test should be continued a sufficient time to obtain uniform indications and such as may be judged to be an average

for the working conditions. In this test it is necessary to have some guide as to the quantity of work being done, and for this reason the power developed by the engine should be determined by obtaining a full set of diagrams at suitable intervals during the progress of the trial. Observations should also be made of all the gauges connected with the plant and of the water heights in the boilers, the latter being maintained at a un form point, so as to be sure that the rate of feeding during the test is not sensibly different from that of the main test.

The heat to be determined is that used by the entire engine equipment, embracing the main cylinders and all auxiliary cylinders and mechanism concerned in the operation of the engine, including the air-pump, circulating-pump, and feed-pumps, also the jacket and reheater when these are used. No deduction is to be made for steam used by auxiliaries, unless these are shown by the test to be unduly wasteful. In this matter an exception should be made in cases of guarantee tests, where the engine contractor furnishes all the auxiliaries referred to. He should, in that case, be responsible for the whole, and no allowance should be made for inferior economy, if such exists. Should a deduction be made on account of the auxiliaries being unduly wasteful, the method of waste and its extent, as compared with the wastes of the main engine or other standard of known value, shall be reported definitely.

The steam pressure and the quality of the steam are to be taken at some point conveniently near the throttle-valve. The quantity of steam used by the calorimeter must be determined and properly allowed for.

X. *Measurement of Feed-water or Steam Consumption of Engine.*—The method of determining the steam consumption applicable to all plants is to measure all the feed-water supplied to the boilers and deduct therefrom all the water discharged by separators and drips, as also the water and steam which escapes on account of leakage of the boiler and its pipe connections and leakage of the steam main and branches connecting the boiler and the engine. In plants where the engine exhausts into a surface condenser the steam consumption can be measured by determining the quantity of water discharged by the air-pump, corrected for

any leakage of the condenser, and adding thereto the steam used by the jackets, reheaters, and auxiliaries as determined independently. If the leakage of the condenser is too large to satisfactorily allow for it, the condenser should, of course, be repaired and the leakage again determined before making the test.

In measuring the water it is best to carry it through a tank or tanks resting on platform weighing-scales suitably arranged for the purpose, the water being afterwards emptied into a reservoir beneath, from which the pump is supplied.

The simplest apparatus of this kind, having a capacity of, say, 6000 pounds of water per hour, consists of a small hogshead connected to the suction-pipe of the pump or injector, and an ordinary oil-barrel mounted on a platform scale, the latter being supported by the hogshead on one side and by a suitable staging on the other. The barrel is filled by a cold-water pipe leading from the source of supply, and this should be a $1\frac{1}{2}$-inch pipe for pressures not less than 25 pounds per square inch. The outlet-valve to the barrel is attached to the side close to the bottom and should be at least $2\frac{1}{2}$ inches in diameter for quick emptying. Where large quantities of water are required the barrel can be replaced by a hogshead, and two additional hogsheads can be coupled together for a lower reservoir. The capacity reached by this arrangement, when the weighing-hogshead is supplied by a $2\frac{1}{2}$-inch valve under 25 pounds pressure and emptied through a 5-inch valve, is 15,000 pounds of water per hour. For still larger capacity it is desirable to use rectangular tanks made for the purpose and having the weighing-tank arranged so that the ends overhang the scales and the reservoir below, the outlet-valve, consisting of a flap-valve, covering an opening in the bottom 6 or 8 inches square. With rectangular tanks this system can be employed for any size of stationary engine ordinarily met with.

Where extremely large quantities of water must be measured, or in some places relatively small quantities, the orifice method of measuring is one that can be applied with satisfactory results. In this case the average head of water on the orifice must be determined, and, furthermore, it is important that means should be at hand for calibrating the discharge of the orifice under the conditions of use.

The corrections or deductions to be made for leakage above referred to should be applied only to the standard heat-unit test, and tests for determining simply the steam or feed-water consumption, and not to the coal tests of combined engine and boiler equipment. In the latter no correction should be made except for leakage of valves connecting other engines and boilers, or for steam used for purposes other than the operation of the plant under test. Losses of heat due to imperfections of the plant should be charged to the plant, and only such losses as are concerned in the working of the engine alone should be charged to the engine.

In measuring jacket-water or any supply under pressure which has a temperature exceeding 212° F., the water should first be cooled, as may be done by first discharging it into a tank of cold water previously weighed, or by passing it through a coil of pipe submerged in running and colder water, preventing thereby the loss of evaporation which occurs when such hot water is discharged into the open air.

XI. *Measurement of Steam Used by Auxiliaries.*—Although the steam used by auxiliaries—embracing the air-pump, circulating pump, feed-pump, and any other apparatus of this nature, supposing them to be steam-driven, also the steam-jackets, reheaters, etc., which consume steam required for the operation of the engine—is all included in the measurement of the steam consumption, as pointed out in Article X, yet it is highly desirable that the quantity of steam used by the auxiliaries, and in many cases that used by each auxiliary, should be determined exactly, so that the net consumption of the main-engine cylinders may be ascertained and a complete analysis made of the entire work of the engine plant. Where the auxiliary cylinders are non-condensing, the steam consumption can often be measured by carrying the exhaust-steam for the purpose into a tank of cold water resting on scales or through a coil of pipe surrounded by cold running water. Another method is to run the auxiliaries as a whole, or one by one, from a spare boiler (preferably a small vertical one) and measure the feed-water supplied to this boiler. The steam used by the air and circulating pumps may be measured by running them under, as near as possible, the working conditions and speed, the main engine and other auxiliaries being stopped, and testing the consumption by

the measuring apparatus used on the main trial. For a short trial, to obtain approximate results, measurement can be made by the water-gage-glass method, the feed-supply being shut off. When the engine has a surface condenser, the quantity of steam used by the auxiliaries may be ascertained by allowing the engine alone to exhaust into the condenser, measuring the feed-water supplied to the boiler and the water discharged by the air-pump and subtracting one from the other, after allowing for losses by leakage.

XII. *Coal Measurement.*—(*a*) Commercial Tests. In commercial tests of the combined engine and boiler equipment, or those made under ordinary conditions of commercial service, the test should, as pointed out in Article VII, extend over the entire period of the day; that is, twenty-four hours, or a number of days of that duration. Consequently the coal consumption should be determined for the entire time. If the engine runs but a part of the time, and during the remaining portion the fires are banked, the measurement of coal should include that used in banking. It is well, however, in such cases to determine separately the amount consumed during the time the engine is in operation and that consumed in the period while the fires are banked, so as to have complete data for purposes of analysis and comparison, using suitable precautions to obtain reliable measurements. The measurement of coal begins with the first firing, after cleaning the furnaces and burning down at the beginning of the test, as pointed out in Article VIII, and ends with the last firing at the expiration of the allotted time.

(*b*) Continuous-running Tests. In continuous-running tests which, as pointed out in Article VII, cover one or more periods which elapse between the cleaning of the fires the same principle applies as that mentioned under the above heading (*a*), viz., the coal measurement begins with the first firing after cleaning and burning down, and the measurement ends with the last firing before cleaning and burning down at the close of the trial.

(*c*) Coal Tests in General. When not otherwise specially understood, a coal test of a combined engine and boiler plant is held to refer to the commercial test above noted, and the measurement of coal should conform thereto.

In connection with coal measurements, whatever the class of tests, it is important to ascertain the percentage of moisture in the coal, the weight of ashes and refuse, and, where possible, the approximate and ultimate analysis of the coal, following all the methods in detail advocated in the latest report of the Boiler Test Committee of the Society. (See Vol. XXI, page 34.)

(*d*) Other Fuels than Coal. For all other solid fuels than coal the same directions in regard to measurement should be followed as those given for coal. If the boilers are run with oil or gas, the measurements relating to starting and stopping are much simplified because the fuel is burned as fast as supplied, and there is no body of fuel constantly in the furnace, as in the case of using solid fuel. When oil is used it should be weighed, and when gas is used it should be measured in a calibrated gas-meter or gasometer.

XIII–XVI. See text.

XVII. *Speed.*—There are several reliable methods of ascertaining the speed or the number of revolutions of the engine crank-shaft per minute. The simplest is the familiar method of counting the number of turns for a period of one minute with the eye fixed on the second-hand of the timepiece. Another is the use of a counter held for a minute or a number of minutes against the end of the main shaft. Another is the use of a reliable tachometer held likewise against the end of the shaft. The most reliable method, and the one we recommend, is the use of a continuous-recording engine register or counter, taking the total reading each time that the general test data are recorded and computing the revolutions per minute corresponding to the difference in the readings of the instrument. When the speed is above 250 revolutions per minute, it is almost impossible to make a satisfactory counting of the revolutions without the use of some form of mechanical counter.

The determination of variation of speed during a single revolution, or the effect of the fluctuation due to sudden changes of the load, is also desirable, especially in engines driving electric generators used for lighting purposes. There is at present no recognized standard method of making such determinations, and

LIBRARY

if such are desired, the method employed may be devised by the person making the test and described in detail in the report.

One method suggested for determining the instantaneous variation of speed which accompanies the change of load is as follows:

A screen containing a narrow slot is placed on the end of a bar and vibrated by means of electricity. A corresponding slot in a stationary screen is placed parallel and nearly touching the vibrating screen, and the two screens are placed a short disance from the fly-wheel of the engine in such a position that the observer can look through the two slots in the direction of the spokes of the wheel. The vibrations are adjusted so as to conform to the frequency with which the spokes of the wheel pass the slots. When this is done the observer viewing the wheel through the slots sees what appears to be a stationary fly-wheel. When a change in the velocity of the fly-wheel occurs, the wheel appears to revolve either backward or forward according to the direction of the change. By careful observations of the amount of this motion the angular change of velocity during any given time is revealed.

Experiments that have been made with a device of this kind show that the instantaneous gain of velocity upon suddenly removing all the load from an engine amounted to from 1/6 to 1/4 of a revolution of the wheel.†

XVIII–XXV.—The greater portion of the matter contained in these paragraphs will be found in the text.

---

† Trans. A. S. M. E. Standard Rules.

CHAPTER XV.

SUPERHEATED STEAM AND STEAM-TURBINES.

Superheated Steam.—Steam in contact with its liquid, all temperature changes having ceased, is a vapor and obeys the laws of vapors. The pressure or tension of a vapor can neither be increased nor decreased by changes of its volume as long as its temperature is kept constant.

If steam is not in contact with its liquid its temperature may be raised; in other words, it may be superheated. In a cylinder we may have superheated, dry, and wet steam at the same instant. This is due to the fact that dry steam is a very poor conductor of heat. It will be found, in fact, that the great value of superheated steam lies in its quality as a poor conductor of heat. The term contact is to be interpreted as immediate contact.

If the steam in the upper portion of the steam-space of a vessel containing steam and water is heated, either the pressure or the volume or both will increase. Steam from a boiler may be superheated by passing it through a series of highly heated tubes on its way to the engine. The fact that the volume of the superheater is constant does not prevent the steam from being heated at constant pressure, since the steam is used in the engine as fast as it is generated and theoretically the reciprocating piston might be replaced by one moving in a cylinder of indefinite length.

This process of heating the steam is performed in a superheater. This consists in a series of cast-iron or steel tubes or steel tubes clad in cast iron placed in the back connection or behind the bridge-wall of fire tubular boilers, over the tubes at the mid-third of their length in water tubular boilers, or they may be placed in a separate setting with a separate grate which is independently fired. The furnace-gases at temperatures between 600° F. and 1500° F. flow around the superheater tubes and the steam passes through them.

Saturated steam at a high pressure contains more heat than the same weight of steam at a lower pressure. If therefore steam at a high pressure is allowed to expand, forming eddies, but (without doing external or useful work) to a lower pressure, the excess

of heat mentioned above will be utilized, first in drying the steam if it be wet, and then in superheating it. This effect is due to the formation of eddies. This form of superheating takes place in throttle-governed engines, in high-speed engines at short cut-off, and in the Peabody calorimeter. In nozzles, eddying is prevented and the energy is utilized in giving the mass of steam additional velocity.

Adheating is a term applied to the superheating of saturated steam by mixing it with highly superheated steam in such proportions that the mixture will possess a prescribed degree of superheat.

Foster Superheater.—The Foster superheater is made up of elements each of which consists of two steel tubes, one inside of the other and so connected that the steam from the boiler passes through the annular space between the tubes, the inner tube being closed at both ends. Cast-iron discs that taper in a cross-section from the inner to the outer periphery are shrunk on the outer tube. These annular gill-flanges are placed close to one another and not only protect the steel tube from corrosion but possess a large surface for the absorption of heat, and also provide a large mass for the retention of heat and so prevent rapid fluctuations of temperature in the superheat of the steam.

This superheater is designed with a view to avoid the necessity for flooding devices or any form of connection between the water-space of the boiler and the superheater. The protection afforded by the external covering of cast iron is ample to prevent damage to the surface during the process of steam-raising. It is evident that if water is admitted to the interior of a superheater there is danger of scale forming in the tubes, which must result in a loss of efficiency or stoppage of the circulation. It is also evident that care and intelligence must be exercised in draining out a superheater which has been flooded before putting it into service, and in properly setting the valves in the pipes to prevent the engine receiving a charge of water." *

The economic advantages of superheated steam have been known since 1826. After a large number of trials its use was abandoned on account of troubles arising from improper lubricants and improper packing for flange-joints and piston-rod

* Catalog of makers.

and valve-stem stuffing-boxes. The superheaters becoming incrusted internally were burnt out or were eaten up by the sulphuric acid formed in damp soot; the cylinders were scored because the tallow used for lubrication was decomposed at high temperatures into non-lubricating elements; the joints leaked from the increased stresses due to increased expansion caused by higher temperatures. Fortunately the advent of mineral

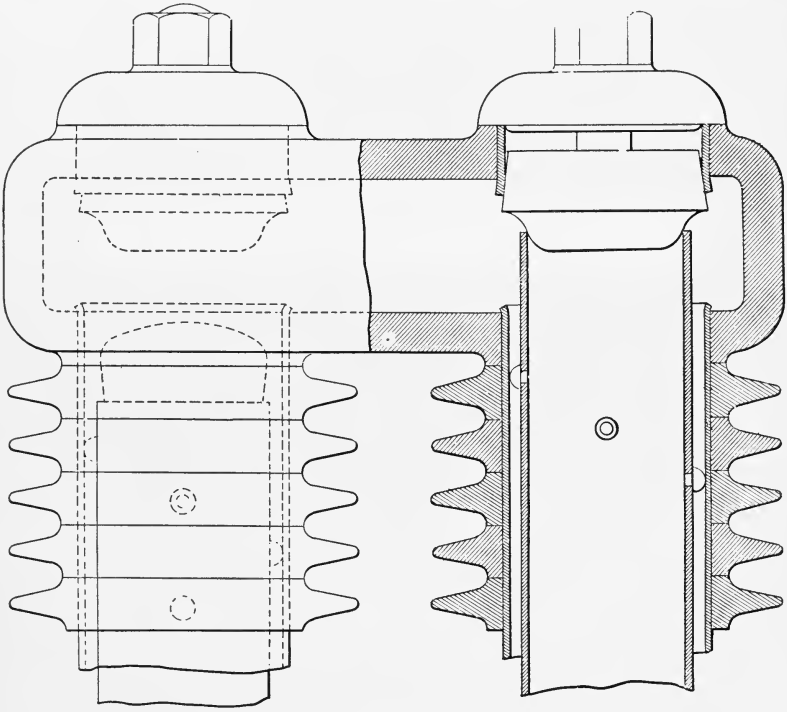

Detail of Return Header

FIG. 227.

oils, metallic packing, and the general advance in the manufacture of structural material used in engineering processes and increased scientific knowledge now make its use possible and economical.

Four methods of reducing cylinder waste, due to initial condensation, are open to us—compression, jacketing, compounding, and superheating. It is pretty well settled that economy lies in reducing clearance surface to the smallest possible amount and that heavy compression in many cases causes loss. Jackets are expensive, are seldom properly operated, and are of value only

in special cases, and these cease to exist with a proper degree of superheating. Superheaters have also reduced the number of cylinders required in compounding. A test will be given of a compound engine and superheater that produced results unrivalled by many triple-expansion engines. In connection with steam-turbines marked advance in economy is produced by the use of superheaters.

The greatest percentage increase in economy is obtained when superheaters are applied to uneconomical engines. Wasteful little engines with a superheater have nearly the same economy as large engines of the same type with a superheater. In other words, the economy of the small one has been increased more

FIG. 227*a*.—Foster Superheating Tube.

than that of the large one. If the reheaters placed in the receivers of multiple-expansion engines do not superheat they are worse than useless. Using high-pressure steam to re-evaporate water to low-pressure steam in a receiver is uneconomical. The water should be taken out by a separator and returned to the boiler, whilst the dry steam should be superheated to prevent initial condensation in the next cylinder.

"The purposes of superheating steam, as practised in the past and as recognized at present, are the following:

"1. Raising the temperature which constitutes the upper limit in the operation of the heat-engine in such manner as to increase the thermodynamic efficiency of the working fluid.

"2. To so surcharge the steam with heat that it may surrender as much as may be required to prevent initial condensation at entrance into the cylinder and still perform the work of expansion without condensation or serious cooling of the surrounding walls of the cylinder.

"3. To make the weight of the steam entering the condenser, and its final heat charge, a minimum, with a view to the reduction of the volume of the condensing water and the magnitude and cost of the air-pump and condenser system to a minimum.

"4. To reduce the back pressure and thus to increase the power developed from a given charge of steam and the efficiency of the engine.

"5. To increase the efficiency of the boilers both by the reduction of the quantity of the steam demanded from the original heating-surface and by increasing the area of the heating-surface employed to absorb the heat of the furnace- and flue-gases, and also by evading the waste consequent upon the production of wet steam." (Thurston.)

If the steam entering a cylinder is only superheated enough to give dry saturated steam at cut-off the range of temperature $\frac{T_1-T_2}{T_1}$ of the Carnot cycle is unchanged and there is no increase of economy from 1. The other four sources of economy depend upon one fundamental fact—the poor conductivity of dry steam. When steam-gas passes through the cylinder, the walls of the latter do not fluctuate so much in temperature. The hot gas gives up its heat slowly to the walls, and on the exhaust-stroke the latter give up their heat slowly. In other words, the slightest film of water on the cylinder walls renders possible a wider fluctuation of metal temperature with its consequent waste of heat than occurs when superheated steam is used. If one thermal unit is wasted in superheating steam it prevents the waste of $2\frac{1}{2}$ thermal units caused by initial condensation.

Thermal Laws.—From experiments Regnault determined the specific heat of steam to be .48. The best values, at present, are those of Knoblauch and Jacobs. Their values show that the specific heat is a variable ranging from .48 to .6, increasing with increasing pressure, but decreasing with increasing temperature at the same pressure. As no authoritative figures have been decided upon, we shall assume the specific heat at constant pressure to be constant and to be .48. See Fig. 228 and Table XV.

Hence the total heat required to heat feed-water from t_1 to T_2, evaporate it at that temperature and then superheat it under a constant pressure (corresponding to T_2) to some temperature T_s is

$H_s=1091.7+.305(T_2-32)-(t_1-32)+.48(T_s-T_2)$ B.T.U.,

or $H_s=H_2+.48(T_s-T_2)$.

Intensity of Superheating Required.—If L = latent heat of steam entering a cylinder, A = its weight in pounds per stroke, x = the

percentage of initial condensation, then xAL = the amount of heat lost by the steam in condensing.

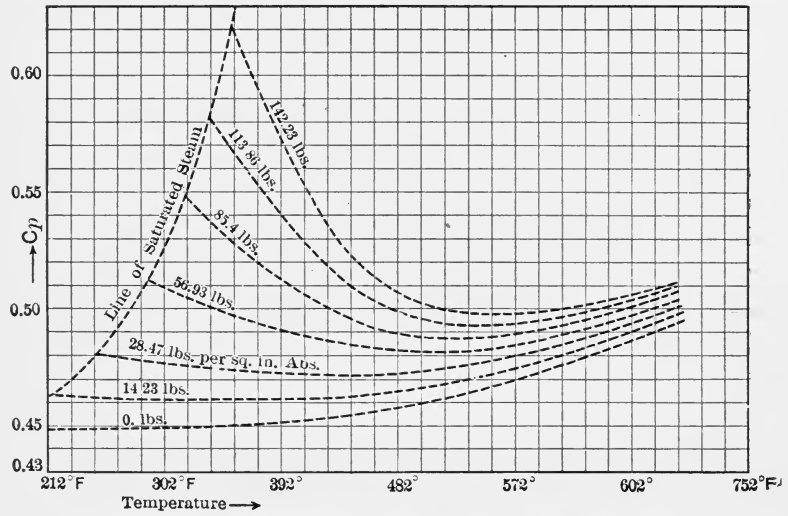

FIG. 228.—C_p of Superheated Steam. (Knoblauch and Jacobs.)

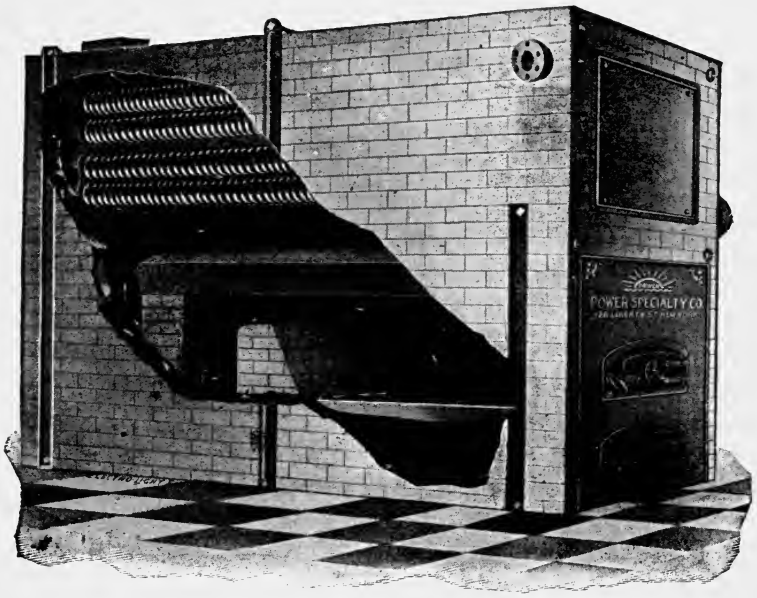

FIG. 229.—Separately Fired Superheater.

If superheated steam had to possess that number of thermal units in excess of those it possesses as saturated steam, it is evident

that the necessary temperature of the superheated steam would be obtained from the equation

$$.48A(T_s - T_2) = xAL, \quad \text{or} \quad (T_s - T_2) = \frac{xL}{.48},$$

where T_s is the temperature of the superheated steam,
T_2 is the temperature of the saturated steam.

If the above were true there would be very little gained by the use of superheated steam, as we would simply substitute one

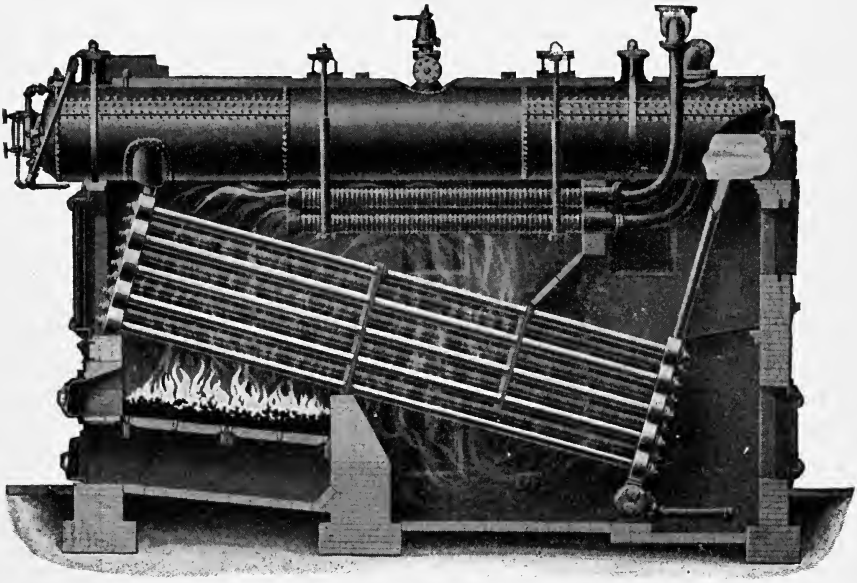

FIG. 230.—Foster Superheater and Water Tubular Boiler.

waste for another. It is found in practice that a very much lower and more feasible degree of superheat is necessary. It varies, of course, with the size and type of engine, ratio of expansion, etc. In some cases it is only .4 or .5 of the amount indicated by the formula above. For example, assume the latent heat of steam to average 875 B.T.U. For each per cent of initial condensation there is a loss of 8.75 B.T.U. If only .4 of this amount is required when the steam is superheated, the number of degrees of superheat required for each per cent of initial condensation would be $\frac{.4 \times 8.75}{.48} = 7$ degrees approximately. Hence the (approximate) rule.

To have the steam dry at cut-off, the necessary number of degrees of superheat of the steam on entrance to the cylinder is equal to the percentage of initial condensation—that would exist without superheating—multiplied by 7. The superheat on leaving the superheater would depend on the length, character, and covering of the steam-main and valve-chest.

The following data (Trans. A. S. M. E., Vol. XXV) are instructive in showing loss of pressures and temperatures in the steam-cycle as well as the economy in the use of superheated steam in an engine that is economical when using saturated steam.*

1. Date of test	May 27	June 19	July 17	July 24
2. Condition of steam: superheated or saturated	Sup.	Sup	Sup.	Sat.
3. Net water per hour to boiler	4633	4018	2684	5630
Pressures.				
4. Gage-pressure at boiler	147	147.9	148.5	149.3
5. Gage-pressure near throttle	141.2	142.4	145.6	145.1
6. Gage-pressure receiver	23	17	3	22
7. Vacuum near engine, inches	25.11	25.82	26.32	24.47
8. " at condenser, inches	25.80	26.79	26.81	25.24
8*a*. Barometer temperatures of steam, degrees Fahrenheit	30.16	29.80	30.01	30
9. Leaving the superheater	766.4	808	849	
10. At the engine-throttle	713.7	736.3	756.8	
11. Entering the H.P. cyl	634.4	658.6	672	
12. Leaving the H.P cyl	346.5	331.5	287.7	262
13. Entering the L.P. cyl	408	395.9	353.6	269
14. Leaving the L.P. cyl	135.1	128.2	124.1	
Amount Steam was Superheated, Degrees Fahrenheit.				
15. Leaving the superheater	402	443.4	484.1	
16. At the engine-throttle	352.5	374.5	393.3	
17. Entering the H.P. cyl	273.2	296.8	308.5	
18. Leaving the H.P. cyl	84.7	77	52	
19. Entering the L.P. cyl	146.2	141.4	117.9	7.1
Horse-power and Economy.				
20. Revolutions per minute	103.28	102.34	102.49	102.2
21 I.H.P. developed by engine	474.5	420.4	276.8	406.7
22 Water in pounds per I.H.P.	9.76	9.56	9.7	13.84
23. Maximum temperature to which the feed-water could be heated by the exhaust of the engine	133.5	125.1	121.7	148.4
24. Coal in pounds per hour (Standard of Civil Engineers of London)	1.265	1.257	1.288	1.497

Bore of cylinders, 16.07" and 28.03", measured when hot.
Length of stroke, 42 inches
Revolutions, 103.

* See also Trans. A S M E., Vol XXII.

Average data and results of (Schmidt) separate superheater test:

1.	Heating-surface in square feet	642
2.	Grate-surface in square feet	4
3.	Duration of test in hours	14
4.	Pressure of steam furnished superheater (gage)	147.4
	Temperatures in Degrees Fah. by Mercury Thermometer:	
5.	Steam entering the superheater	365°.6
6.	" leaving " "	809°.1
7	Amount steam was superheated	443°.5
	Total Quantities.	
8.	Steam passing through the superheater in pounds	58,025
9.	Heat imparted to the steam in B.T.U.	12,352,000
10.	Total moist coal fire in pounds	1,473
11.	" dry coal consumed in pounds	1,426
12.	Coal burnt per square foot of grate-surface per hour in pounds	25.5
13.	Heat imparted to the steam in the superheater per pound of coal burned in B.T.U.	8.662
14.	Equivalent evaporation from and at 212° F. in pounds per pound of dry coal	8.97
15.	Heat of combustion of the dry coal in B.T.U. per pound	14,060
16.	Efficiency of the superheater based on the heat of combustion of the coal in per cent	61.6
	Combined Economy of Boiler and Superheater.	
17.	Actual evaporation of the boiler per pound of dry coal in pounds	8.586
18.	Coal burnt in the superheater in pounds per pound of steam passing through it	.02458
19.	Coal burnt in superheater in pounds per pound of coa burned at boiler, Item 17×Item 18	.211
20.	Actual evaporation of the combined boiler and superheater	7.090
21.	Factor of evaporation of the combined boiler and superheater	1.421
22.	Equivalent evaporation in pounds per pound of dry coal from and at 212° F. for the combined boiler and superheater	10.07
23.	Efficiency of the combined boiler and superheater based on the heat of combustion of the coal in per cent	69.2

From the above data the student should calculate:

1. The loss of heat in the main steam-pipe.

2. The probable superheat at cut-off, assuming 20% condensation would occur in tests 1 and 2 if dry steam were used.

3. Obtain the paper in the Trans. A. S. M. E., Vol. XXV, and check one or more percentages of superheating.

4. Assume the mean temperature of flue-gases in superheater at 1500° F., what is the rate of transmission per square foot per degree difference of temperature per hour?

5. Draw a diagram similar to that on page 197, showing the thermal losses in the engine cycle.

6. Assume a cross-compound Corliss engine 24″×44″×60″; 870 I.H.P.; revs., 72; clearance H.P. cyl., .03%; cut-off, .33 stroke; initial pressure abs., 114; pressure at cut-off, 104.4 abs.; steam accounted for at cut-off, 12.28 pounds; proportion

of feed-water accounted for at cut-off, .866; steam-pipe, 80 feet long. Find the diameter of the steam-pipe; assume character of lagging and bends and find probable heat loss. Design a Schmidt separate superheater that will supply dry steam at cut-off, viz., answer the following requirements: Heating-surface; grate-surface; coal; degree of superheat leaving the superheater, at the throttle, entering cylinder.

The designer calls attention to the following points in the design:

"The double-beat poppet-valves have seats surrounded by the inlet steam in such a way that the expansion of the seat is equal in extent and effect to that of the valve, thus overcoming completely the characteristic defect of ordinary designs of their type of valve, namely, excessive leakage at any temperature other than the particular one at which they were originally ground. The inlet-valves are driven by the ordinary trip-gear of the builders, with vacuum dash-pots, with the addition of a simple linkage which controls the closure of the valve independent of the extent of closing motion imparted by the dash-pot, and thus prevents slamming or partial closing of the valve. The exhaust-valves are actuated by a system of links devoid of cams, always in connection with the eccentric, except when hand-actuated at starting or stopping, and which keeps the valve stationary during the forward stroke, as is necessary when using the poppet type, and all joints are adjustable for wear.

"The stuffing-boxes are on long necks to take them well away from the superheat, and the piston-rod stuffing-boxes have metallic packing provided with water-jackets, which, however, have never been used. The piston-packing consists of two simple iron spring rings with joint plates.

"The high-pressure cylinder is so designed that the working portion of its band is a simple cylinder without ribs, all connections to the cylinder, such as valve-cleats, lagging-bosses, inlets, and exhaust-gages, etc., being at the ends. . . .

"The only trouble noticed with lubrication was a smoking due to the carbonization of the animal or vegetable constituents of the original oil used. On notifying the oil-makers of this trouble they at once produced an oil which eliminated all complaint.

"The operation of the superheater has proved to be simple;

in fact it is easier to run than a boiler, since the pyrometer-dial is the only thing to be watched. Fire is never built in the superheater without a flow of steam through the coils, under which conditions there is no sign of deterioration. The temperature is readily regulated, even when the engine is shut down for changes. in the mill, which happens once or twice in twenty-four hours in regular operation. If the shutdown is for more than a few minutes a small flow of steam is secured by "cracking" the throttle-valve and allowing a little steam to blow through the engine, but for short stoppages this is not necessary. The pipes, cylinders, and receiver are covered with 3 inches of a standard magnesia covering over pipes and flanges."

Temperature-entropy Diagram for Superheated Steam.—In Fig. 231 let $e_1t_1t_3s_3e_4$ represent the heat-units expended in heating one pound of water from t_1° F. to t_3° F. and converting it into dry saturated steam at that temperature. To superheat this steam at constant pressure to some temperature T_s requires

$$Q = .48(T_s - T_3) \text{ thermal units} = \int dQ = \int_{T_3}^{T_s} .48 dT.$$

Hence the entropy

$$= \int d\phi = \int \frac{dQ}{T} = .48 \int_{T_3}^{T_s} \frac{dT}{T} = .48(\log_e T_s - \log_e T_3),$$

where T_s and T_3 are *absolute* temperatures in degrees Fahrenheit. This increase of entropy may be laid off from e_4 to some point e_2 and erecting a perpendicular = T_s the point T_s is found. By assuming a series of values for T_s a series of points in the curve s_3T_s' may be found. The curve when drawn to the usual scale is practically a straight line and may be so assumed. That being the case the value of $e_4e_5 = \dfrac{Q}{\dfrac{T_s + T_3}{2}}$.

If this steam expands adiabatically the line $T_s's_2m_4$ indicates the thermal changes that occur. When the temperature dropped to t_2 the intersecting of the vertical and the saturated steam lines show that at that instant the steam is dry saturated steam. Further expansion to t_1 is followed by the condensation of a part of the steam equal in amount to $\dfrac{m_4s_1}{t_1s_1}$ of a pound.

If the fraction $\frac{m_4 t_1}{t_1 s_1} = x$, its value may be obtained from the equation

$$e_0 e_5 = e_0 e_1 + e_1 e_5 = e_0 e_3 + e_3 e_4 + e_4 e_5,$$

or

$$\phi_1 + \frac{x L_1}{T_1} = \phi_3 + \frac{L_3}{T_3} + \frac{.48(T_s - T_3)2}{T_s + T_3},$$

whence x may be determined.

The efficiency of the added heat is theoretically $\frac{s_3 T_s' m_4 m_3}{e_4 s_3 T_s' e_5}$. If the practical gain were no greater than this superheaters would not repay their cost and trouble.

Superheated Steam in Compound Engines.—It is practical to superheat steam to such a temperature that it will be superheated

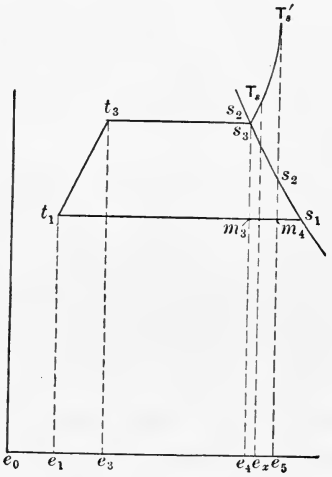

FIG. 231.

at exhaust-opening in the high-pressure cylinder, but it would not be practical, nor is it indeed necessary, to have the initial temperature so high that the steam is superheated at cut-off in the low-pressure cylinder. It is better to divide the superheating into two stages and put superheating coils in the receiver between the two cylinders. Elsewhere it has been pointed out that any moisture in the steam from the high-pressure cylinder should be separated out so that the superheating is only applied to dry saturated steam. It was further pointed out that the receiver

steam should be superheated from 50 to 100 degrees; this would require 1.5 square feet of pipe surface to the I.H.P.

Durability of Superheaters.—Superheaters are best preserved by keeping a continual supply of steam flowing through them. The amount of this steam should be proportional to the amount of coal burning on the grate. In case the engine should slow down or have a reduced load the amount of steam passing through the superheater should not be diminished. It is better to bleed the excess into heaters or into steam used for other purposes. If this cannot be done the fires in superheating boilers should be diminished.

In tests of a B. & W. boiler, 5000 sq. ft. heating-surface, 1000 sq. ft. of superheating surface, a chain grate-stoker 75 sq. ft. surface, the following facts are stated:

1. Superheat varied from 125° to 175° as the boiler horse-power varied from 350 to 750.

2. The horse-power of the superheater varied from 35 to 100 as the boiler horse-power varied from 350 to 700.

3. From 7 to 17% of the b.h.p. was produced in the superheater as the b.h.p varied from 100 to 900.

When the main boilers were forced there was a greater weight of gases at a higher temperature passing around the superheating tubes.*

Steam-nozzles.—When steam flows through a nozzle it was shown (page 216) that

$$\frac{V^2}{2g} = (E_1 + p_1 v_1) - (E_2 + p_2 v_2).$$

At first sight it would appear that the weight and velocity of steam delivered by a steam-nozzle would continually increase with a continuous lowering of the back pressure or the pressure at the exit end of the nozzle. A close inspection of the formula for $\frac{V^2}{2g}$ shows that it includes also the final volume of expansion, which increases and therefore tends to diminish the value of the velocity of exit. The demonstra-

* Trans. A. S. M. E., Vol. XXVI.

tion below of what is known as Zeuner's formula shows that the maximum *weight* of steam that an orifice can deliver is obtained when the back pressure, p_2, is $.57p_1$.

For steam, if p_2 becomes less than $.57p_1$, the delivered weight

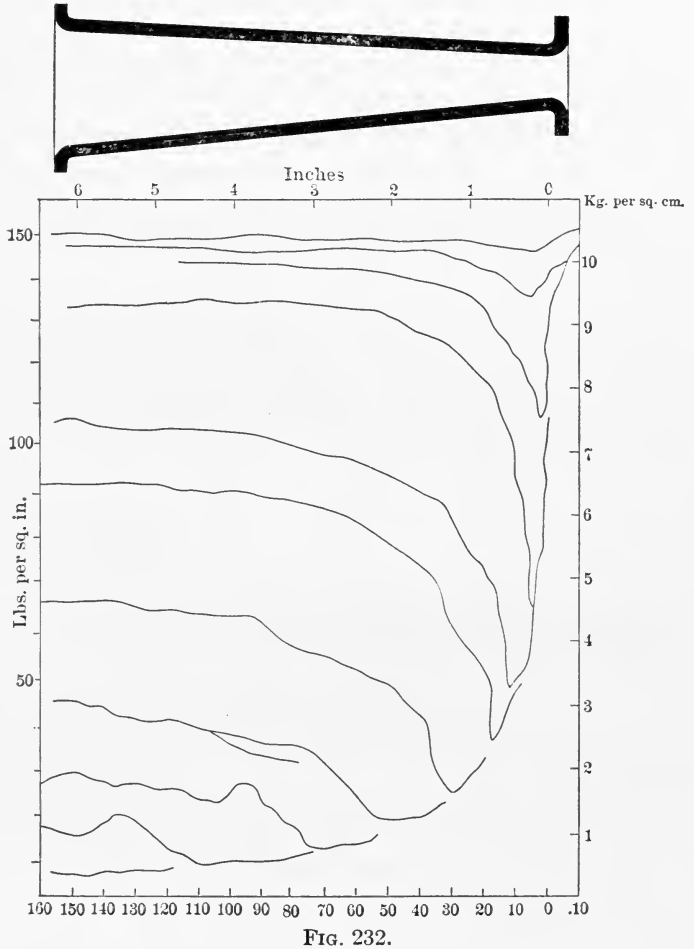

FIG. 232.

remains constant. For perfect gases, if p_2 becomes less than $.528p_1$, the delivered weight decreases. If p_2 is kept constant and p_1 is increased the weight delivered of steam or perfect gases is increased.

A nozzle must be designed to give definite results under definite conditions. It can be shown that a very slight alteration

of the conditions may produce a very considerable change in the results. Nozzles may easily be too long or too short, may expand too rapidly or not rapidly enough, and the orifice at the entrance may be too well rounded or the reverse for existing conditions. If the nozzles are too long the work of friction is carried off as heat. Short nozzles are desirable with low pressures; with high pressures longer nozzles may be used. If the cross-section of the nozzle increases too rapidly the stream acquires too many cross-eddies.

The maximum weight of steam discharged through a *simple orifice* is determined by the maximum velocity *in* the orifice, although there may be higher velocities on the discharge side accompanied by very low gas density. The maximum velocity *in* the orifice never exceeds 1500 feet per second no matter how great the difference between the initial and discharge pressures.

Given the ratio $\frac{p_2}{p_1}$, p_1, and the weight of steam discharged per second by Zeuner's formula the necessary cross-section at any part of the nozzle can be found. For a maximum W_1 the value of $\frac{p_2}{p_1}$ should be .57. The best results are obtained when the steam-pressure in the nozzle gradually decreases to the back pressure, otherwise vibratory waves shown in Fig. 232 are set up.

Hence if p_2 is less than $.57p_1$, design the throat or narrowest part of the nozzle for a $p_2 = .57p_1$ and design the exit for a p_2 equal to the pressure at the discharge end of the nozzle.

Zeuner's Formula.—We have seen that the work of adiabatic expansion is $\frac{p_1v_1 - p_2v_2}{\gamma - 1}$, which becomes $\frac{p_1v_1}{\gamma - 1}$ if the expansion is carried to $p_2 = 0$. $\therefore \frac{p_1v_1}{\gamma - 1} = E$, the intrinsic energy.

The formula $\frac{V_2^2}{2g} = (E_1 + p_1v_1) - (E_2 + p_2v_2)$ may be written

$$\frac{V^2}{2g} = \left(\frac{p_1v_1}{\gamma - 1} + p_1v_1\right) - \left(\frac{p_2v_2}{\gamma - 1} + p_2v_2\right).$$

It is desirable to get rid of v_2 and obtain results in terms of $\frac{p_2}{p_1}$ and p_1.

$$p_2v_2 = p_1v_1\left(\frac{v_1}{v_2}\right)^{\gamma-1} = p_1v_1\left(\frac{p_2}{p_1}\right)^{\frac{\gamma-1}{\gamma}}.$$

Hence
$$\frac{V^2}{2g} = p_1v_1\left(\frac{\gamma}{\gamma-1}\right)\left\{1-\left(\frac{p_2}{p_1}\right)^{\frac{\gamma-1}{\gamma}}\right\},$$

or
$$V = \sqrt{2gp_1v_1\left(\frac{\gamma}{\gamma-1}\right)\left\{1-\left(\frac{p_2}{p_1}\right)^{\frac{\gamma-1}{\gamma}}\right\}}.$$

If the area of the orifice in square feet is A, the volume discharged per second will be AV. As the above formulas apply to one pound weight, it is evident that v_2 is the specific volume per pound at p_2, the pressure at the section of area A.

Weight discharged per second $= \frac{AV}{v_2} = W.$

But $v_2 = v_1\left(\frac{p_1}{p_2}\right)^{\frac{1}{\gamma}}$. Therefore

Weight discharged per second

$$= W = A\sqrt{\left(\frac{2gp_1}{v_1}\right)\frac{\gamma}{\gamma-1}\left\{\left(\frac{p_2}{p_1}\right)^{\frac{2}{\gamma}} - \left(\frac{p_2}{p_1}\right)^{\frac{\gamma+1}{\gamma}}\right\}}.$$

To obtain the maximum weight discharged per second let $\frac{p_2}{p_1} = r$. Then the weight W becomes a maximum when $(r)^{\frac{2}{\gamma}} - (r)^{\frac{1+\gamma}{\gamma}}$ becomes a maximum.

Differentiating and equating the first differential to zero,

$$\frac{2}{\gamma}r^{\frac{2}{\gamma}-1} - \left(1+\frac{1}{\gamma}\right)r^{\frac{1}{\gamma}} = 0.$$

Dividing by $r^{\frac{1}{\gamma}}$ we obtain $r = \left(\frac{2}{\gamma+1}\right)^{\frac{\gamma}{\gamma-1}}$.

Substituting the values of $\gamma = \frac{k_p}{k_v}$ for steam and air we have:

For air, $\gamma = 1.41$; $r = .528 = \frac{p_2}{p_1}$.

For dry saturated steam, $\gamma = 1.135$; $r = .577 = \frac{p_2}{p_1}$.

The restriction in the weight discharged is caused by the actual formation or the tendency to form in the orifice a *venâ contractâ*, or contracted vein, in which the pressure does not drop below the value of p_2 indicated above, no matter what the final or exterior pressure may be. From the contracted orifice the pressures should decrease to the final pressure.

Steam-turbines.—To understand the action of steam on the blades of a steam-turbine, the student should review the derivation of certain formulas in hydraulics.

We have seen that it requires the expenditure of Wh foot-pounds of energy to raise W pounds through a height of h feet; that in falling freely through this height the body would acquire a velocity of V feet per second; that $h=\frac{V^2}{2g}$, and hence the energy possessed by the body due to its velocity of motion is $W\frac{V^2}{2g}$.

Bodies at rest or moving uniformly, whether in straight or curved lines, cannot be under the influence of any unbalanced force. In other words, all forces acting on a body moving uniformly must be reducible to pairs composed of equal and opposite forces. A train of cars moving uniformly down a grade has all resistances exactly equal to the impelling force of gravity; a fly-wheel moving uniformly does no work—it is actively useful only when it is moving non-uniformly.

The force necessary to produce a change of velocity in a body is proportional to the product of the mass of the body and the amount of change in the velocity produced in the time that the force has been acting on the body.

$$Fdt=MdV,$$
$$\int_0^T Fdt=\int_0^V MdV,$$
$$FT=MV,$$

where $\frac{V}{T}$ measures the increase in velocity, i.e., acceleration per unit of time.

A small force, F, acting for a long time, T, or a large force, F, acting for a short time, T, will change the velocity of a body of mass

M from 0 to V feet per second, or add V feet per second to any previously acquired velocity. If a body has any velocity, V feet per second, we may suppose that such velocity was acquired from zero velocity in one second; therefore

$$F=MV.$$

If a body took T seconds to acquire a velocity of V feet per second (initial velocity=0), the mean velocity would be $\frac{V}{2}$ and the space passed over would be $\frac{V}{2}T$. If, however, a body has a velocity of V feet per second, we may suppose that velocity was acquired in one second, hence the space passed over would be $\frac{V}{2}$ under the action of a force $F=MV$.

As energy is the product of a force and the distance through which that force was exerted, the energy exerted on the body will be the product of MV and $\frac{V}{2}$ or $\frac{MV^2}{2}$ or $\frac{WV^2}{2g}$. In other words, the energy put into the body is equal to the energy it possesses in virtue of its acquired velocity.

As g is always expressed in feet per second, it is wise to express all other quantities, in the same equation, in terms of units homogeneous with it. Hence, in dealing with a continuous stream, it is convenient to express M, the mass of the fluid stream passing per second, by $\frac{wAV}{g}$, where w is the weight of the fluid per cubic foot, A is its cross-sectional area in square feet, and V is its velocity in feet per second. The force in pounds that could be exerted by such a stream, if its line of action were diverted through 90°, would be $F_{90°}=MV$ or $\frac{wAV^2}{g}$, since the velocity in the original direction is reduced to zero. Hence the force exerted is proportional to the velocity squared. Analyzed, the expression is (wAV) pounds multiplied by feet per second divided by feet per second. The production of this force causes no loss of energy so long as no portion of the force is exerted through a distance. In fact, if the stream is bent through 180° by means of a frictionless bend, the force that

the stream exerts on the bend in the direction of the original stream is twice the above amount, or

$$F_{180^\circ} = 2\frac{wAV^2}{g}.$$

Friction, of course, causes a reduction of energy, since the frictional resistance has its line of action parallel but opposite to the line of motion of the stream.

A derivation of a general formula for the force exerted when the line of action of a stream is bent through any angle α will now be given.

Impulse Due to a Jet Moving on a Curved Blade.—Let a stream, cross-section A square feet, weight w pounds per cubic foot, velocity V feet per second, measured where cross-section of stream is A square feet, strike a frictionless vane, BC, of such curvature that the stream is deflected through α degrees, as shown in Fig. 170. Each ds of the vane will react radially an amount exactly equal to the radial force exerted by the stream through having its line of action diverted. The amount of this radial force on any elementary ds is equal to the centrifugal force of the weight of the fluid that is on that area at that instant.

$$dF_r = \frac{wA \cdot ds \cdot V^2}{g \cdot r}.$$

The horizontal component of this force, dF_x, $= dF_r \sin \theta$.

The vertical component of this force, dF_y, $= dF_r \cos \theta$.

The total force exerted on the whole vane along the X and Y axes will be equal to the integral of the above quantities between the limits, 0 and α, for the angle θ.

$$F_x = \int_0^\alpha dF_x = \int_0 dF_r \sin\theta = \int_0^\alpha \frac{wAdsV^2}{gr} \sin\theta$$

$$F_y = \int_0^\alpha dF_y = \int_0^\alpha dF_r \cos\theta = \int_0^\alpha \frac{wAdsV^2}{gr} \cos\theta$$

Keeping in mind that θ and $d\theta$ measure the lengths of arcs at unit radius, we may get rid of the variable, r, by substituting $ds = rd\theta$.

Hence $$F_x = \int_0^{\alpha} \frac{wAV^2}{g} \sin\theta d\theta = \frac{wAV^2}{g}(1-\cos\alpha),$$

$$F_y = \int_0^{\alpha} \frac{wAV^2}{g} \cos\theta d\theta = \frac{wAV^2}{g} \sin\alpha.$$

But $$F_r = \sqrt{F_x^2 + F_y^2} = \frac{wAV^2}{g}\sqrt{2(1-\cos\alpha)}.$$

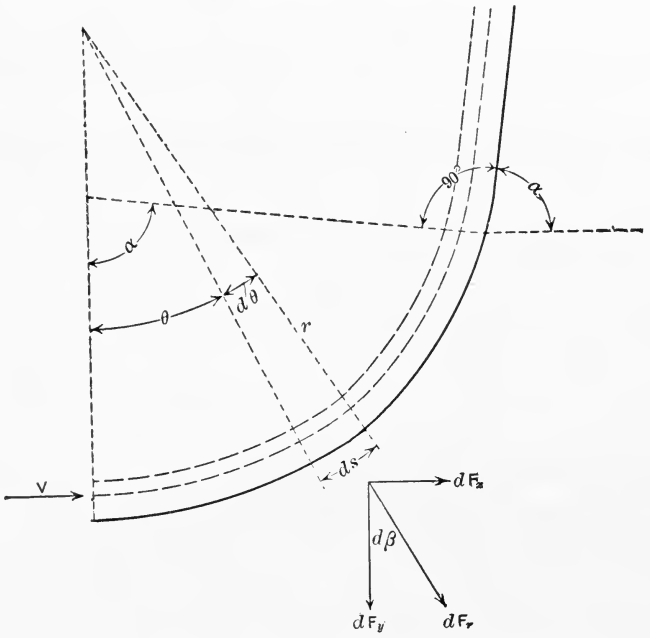

FIG. 233.

But the weight of fluid flowing per second, W, $= wAV$. Hence

$$F_x = \frac{WV}{g}(1-\cos\alpha), \quad F_y = \frac{WV}{g}\sin\alpha, \quad F_r = \frac{WV}{g}\sqrt{2(1-\cos\alpha)}.$$

Knowing the *totals*, F_x and F_y, the direction of the resultant impulse F_r is given by

$$\tan\beta = \frac{F_x}{F_y} = \frac{1-\cos\alpha}{\sin\alpha}.$$

(β being the angle between the totals F_y and F_r.)

NOTE.—The above formulas may be gotten more simply thus: If the stream is turned through 90° and the velocity in the original direction becomes zero the force is $\frac{WV}{g}$. Hence for any other angle, $\Sigma H = 0$ and $\Sigma V = 0$, we have $F_x = \frac{WV}{g}(1-\cos\alpha)$ and $F_y = \frac{WV}{g}\sin\alpha$.

The values of F given for the angles 90° and 180° may be obtained from these general equations by making $\alpha = 90°$ or 180°. The value of $\cos\alpha$ is additive if the angle through which the stream is turned is greater than 90° and subtractive if it be less than 90°.

In the derivation of the formula α indicated the angle through which the stream is turned. Frequently, however, the supplementary angle or the angle beween the entering and departing streams is used. Hence the preceding formulas often appear as

$$F_x = \frac{WV}{g}(1+\cos\alpha),$$

$$F_y = \frac{WV}{g}\sin\alpha,$$

$$F_r = \frac{WV}{g}\sqrt{2(1+\cos\alpha)}.$$

A modification of the preceding lines of motion is seen in Fig. 171, where the entering and leaving streams are inclined at

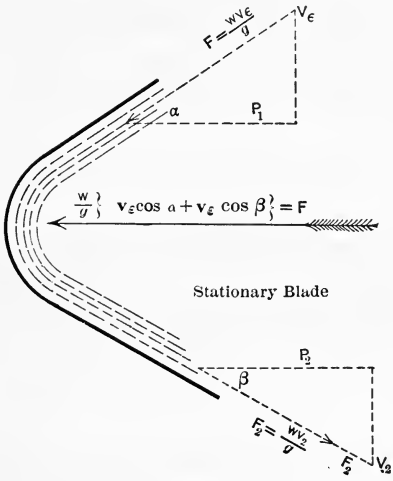

FIG. 234.

angles α and β with F, the line of action of the required force. For a *stationary* and *frictionless* vane the entering and departing velocities must be equal since there can be no loss of energy. The

impulse due to V_e in its line of action is $\frac{WV_e}{g}$. The *reaction* due to V_2 in its line of action is $\frac{WV_2}{g}$. Resolving these forces along the line of action of F and we have

$$P_1 = F_e \cos \alpha = \frac{WV_e}{g} \cos \alpha,$$

$$P_2 = F_2 \cos \beta = \frac{WV_2}{g} \cos \beta.$$

As $V_e = V_2$, $$P = \frac{WV_e}{g}(\cos \alpha + \cos \beta).$$

The action or the impulse of the stream against the bucket when stationary, as in the preceding examples, or when moving, as in the examples that follow, and whether friction is regarded or disregarded, may be found by the application of the following rule.

Draw the line of motion of the vane or bucket. Find the velocities of entrance and departure of the stream relative to the bucket section. Resolve these velocities along the line of motion of the bucket. To obtain the impulse multiply the algebraic sum of these components by $\frac{W}{g} = \frac{wAV}{g}$. Hence

$$F = \frac{wAV}{g}(V_i \cos \alpha + V_f \cos \beta),$$

where A is the cross-section in square feet at the section where V is measured, V_i is the relative velocity of entrance and V_f is the relative velocity of exit from the wheel.

The same result will be obtained if V_i is the *absolute* velocity at entrance and V_f the *absolute* velocity at exit from the wheel, since the sum of the components of these velocities is the same as the sum of the components of the relative velocities.

The work done per second will evidently be the above force multiplied by the velocity per second of the vane. If v is that velocity then the work $= Fv$.

In Fig. 235 let the bucket move in the direction of F with the velocity v. The velocity of entrance relative to the bucket section is $V - v$. The velocity of departure is necessarily the

same. Resolving the velocity of entrance along F and we obtain $(V-v)\cos 0° = V-v$. Resolving the velocity of departure relative to the bucket section along F and we obtain $(V-v)\cos\alpha$. As

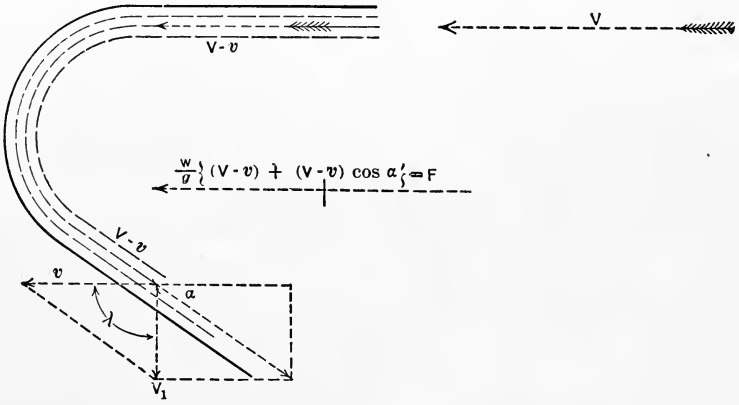

FIG. 235.

the stream has been turned through more than 90° these quantities are to be added.

Hence $$F=\frac{W}{g}(V-v)(1+\cos\alpha).$$

In Fig. 236 let the bucket *move* in the direction F with the velocity v. If the absolute velocity of entrance of the stream be V_e, its velocity relative to the bucket section on entrance is V_i in the direction shown and, on departure, the relative velocity is $V_f = V_i$, neglecting frictional and other resistances. Resolve the relative velocities along the direction of F and obtain

$$F=\frac{W}{g}V_f(\cos\alpha+\cos\beta)$$

V_f equals V_i since there is no friction, v is the velocity of the bucket and V_2 is the absolute final velocity of the stream.

From the velocity diagrams, other equivalents may be obtained for F

$$F=\frac{W}{g}(V_e\cos\lambda-v+V_f\cos\beta),$$

$$F=\frac{W}{g}(V_e\cos\lambda\pm V_2\cos\delta).$$

Blade Angles.—If the entering stream struck the back of a revolving blade the motion of the latter would be impeded and the efficiency would be lowered. The angle α of the back of the blade on the entering side in Fig. 236 is determined by

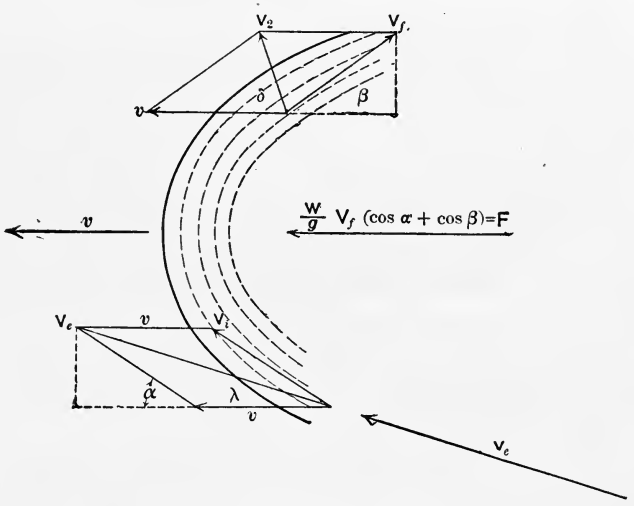

FIG. 236.

the relations that exist between V_e, v and λ. Hence α can be determined from the relation found as follows:

$$\frac{v}{V_e} = \frac{\sin(\alpha - \lambda)}{\sin \alpha} = \frac{\sin \alpha \cos \lambda - \cos \alpha \sin \lambda}{\sin \alpha} = \cos \lambda - \cot \alpha \sin \lambda,$$

whence

$$\cot \alpha = \cot \lambda - \frac{v}{V_e \sin \lambda}.$$

Shock is avoided, then, by having the entering angle of the back of the blade parallel to the relative motion of the entering stream. On the other hand, the angle of leaving is one of the principal factors in determining the efficiency of the mechanism. The difference in the energy of a stream on entering and on leaving a blade must appear either as friction or as useful work. Efficiency is increased by making the energy rejected as small as possible.

If a stream has an absolute velocity, V_e, before it meets a resistance and an absolute velocity of V_2 afterwards the loss of

energy of the stream is $\frac{W(V_\epsilon^2 - V_2^2)}{2g} = \frac{wA_\epsilon V_\epsilon (V_\epsilon^2 - V_2^2)}{2g}$. This loss of energy may appear as the work of friction, useful work in moving the vane against a resistance or both combined.

Disregarding friction, let us determine the conditions of maximum efficiency. It will evidently depend upon making V_2 or bd, Figs. 236 and 237, a minimum.

$$bd^2 = ed^2 + eb^2 - 2(eb \times ef).$$

Disregarding friction,

$$\begin{aligned} ab &= bc = ed, \\ bd^2 &= ab^2 + eb^2 - 2(eb \times ef), \\ ae^2 &= ab^2 + eb^2 + 2(eb \times bg), \\ bd^2 &= ae^2 - 2(eb \times bg) - 2(eb \times ef), \\ bd^2 &= V_2^2 = V_\epsilon^2 - 2v(V_i \cos \alpha + V_i \cos \beta), \\ V_2^2 &= V_\epsilon^2 - 2vV_i(\cos \alpha + \cos \beta). \end{aligned}$$

Maximum Efficiency under Various Conditions.—1. If the stream is turned through 180° both α and β will be zero, hence $\cos \alpha = \cos \beta = 1$.

$$V_2 = 0 \quad \text{and} \quad v = V_i = \frac{V_\epsilon}{2}.$$

For the highest theoretical efficiency the stream should be turned through 180° and the velocity of the vane should be one-half the velocity of the entering stream.

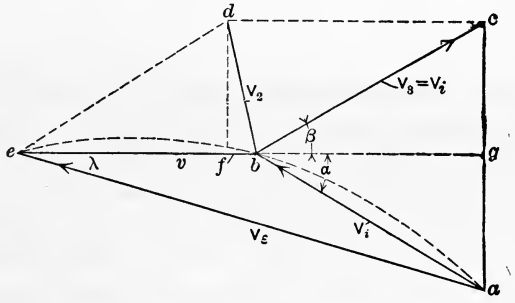

Fig. 237.

2. As a rule, it is not feasible to have $\alpha = \beta = 0$. When V_ϵ, α, and β are fixed, V_2 has a minimum value when (vV_i) is a maximum. If V_ϵ and α are fixed in amount, a circular arc can be

passed through a, b, and e, since we have given a chord and the angle subtended by the chord and as V_i must be less than V_ϵ. Let abe be the circular arc and b the varying point on it. Now $\frac{vV_i \sin \alpha}{2}$ is the area of the triangle abe and so is ae multiplied by the altitude. Since $\sin \alpha$ is a constant, anything that increases the area of the triangle increases the value of vV_i. The altitude perpendicular to ae is a maximum when b is the middle point of the arc abe. Hence vV_i is a maximum when $v = V_i$ or $\lambda = \frac{\alpha}{2}$.

Therefore, when V_ϵ, α, and β are fixed, the best economy occurs when the speed of the blade, v, is such that $v \cos \frac{\alpha}{2} = \frac{V_\epsilon}{2}$.

3. If V_ϵ is fixed in direction, and we know that $\beta = \alpha$, but we do not know the value of either. (Fig. 237.)

$$V_2^2 = V_\epsilon^2 - 4vV_i \cos \beta.$$

As V_ϵ is fixed in direction, λ and $V_\epsilon \cos \lambda$ are constant. $V_3 \cos \beta = V_i \cos \alpha$. V_2^2 is made a minimum by making $vV_i \cos \beta = (eb \times bg)$ a maximum. As eg is a constant, the maximum rectangle or product of its parts, when divided into two parts, occurs when the parts are equal, viz., form a square of which $\frac{eg}{2}$ is a side.

Hence $v = \frac{1}{2} V_\epsilon \cos \lambda$ is the condition of maximum efficiency.

De Laval Steam-turbines.—In the De Laval steam-turbine, Fig. 238, steam-jets issuing from suitably designed nozzles impinge against the vanes or buckets of a single turbine-wheel designed and constructed to revolve at revolutions varying from 30,000 per minute in the 10-H.P. size to 11,000 per minute in the 300-H.P. size. The steam enters the passageway between buckets at one side of the wheel, passes through at constant pressure, but with rapidly diminishing velocity, and is discharged on the other side into the atmosphere or condenser. The diagrammatic sketch, Fig. 239, shows how the pressure in the nozzle decreases from that of the boiler to that of the atmosphere or condenser. The turbine-wheel revolving in this low pressure has, therefore, low frictional resistance on the sides and the thrust in the direction of the axis

is practically very small. It further shows that the maximum velocity of the steam is generated in one nozzle in one stage and the total absorption of this velocity takes place in one running wheel. The simplicity of this arrangement is as remarkable as are the velocities that it necessitates.

The centrifugal stresses generated in the turbine-wheels of this design requires not only the use of special metal but special

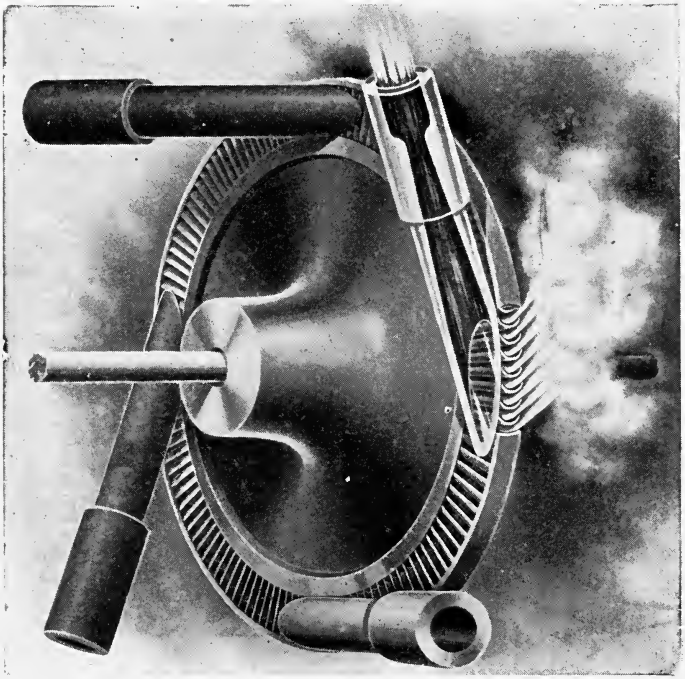

FIG. 238.—The De Laval Turbine Wheel and Nozzles.

forms and special care in balancing. The wheels are made of forged nickel steel, flaring (in a cross-section) from the periphery to the hub, solid in the larger sizes to avoid loss of strength due to perforation even for the axle, and mounted on a flexible shaft to avoid the vibration stresses that are inevitable when an imperfectly balanced mass is rotating with a rigidly fastened shaft. Even if the wheel were perfectly symmetrical in shape, at the high speeds at which these wheels rotate the slightest difference in mass density would set up vibration waves which would pro-

duce enormous stresses. The velocity of rotation of the turbine-shaft is reduced by one or more pairs of spiral gears, ratio of ten to one, meshing in opposite directions to transfer all axial thrust to the slower-moving shaft.

Theoretical Design.—The expansion in the Laval nozzle is practically adiabatic. From the entropy diagram we may easily

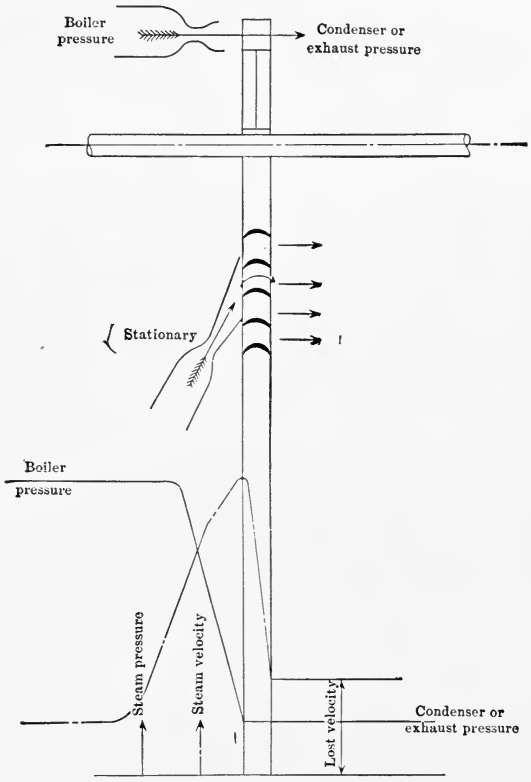

FIG. 239.—Diagrammatic Sketch of De Laval Turbine.

calculate the loss of heat as heat when steam expands adiabatically from any given pressure to that of the atmosphere or to a given pressure in a condenser. The heat so lost is the value of (H_1-H_2) in the equation $\frac{V_t^2}{2g}=(H_1-H_2)778$. Hence we may obtain the value of V_t (theoretical velocity). In the De Laval nozzles this velocity may reach 2500 or 3000 feet per second or more. The practical value of $V_t=.95V_t$.

It was shown on page 456 that when V_t is given in direction and amount and that $\alpha = \beta$ the maximum efficiency of the turbine is obtained when the lineal velocity of the vanes, v, $= \frac{1}{2} V_t \cos \lambda$. This makes bd at right angles to the direction of v and gives a maximum value to $\frac{V_t^2 - V_2^2}{2g}$. If λ is 20 degrees, $\frac{1}{2} V_t \cos \lambda =$ the required lineal velocity of the buckets $= v = .47 V_t$. Hence if V_t has a value of 2500–3000 feet per second, the velocity of the buckets will have to be 1175 to 1410 feet per second. The actual velocity of the periphery of the wheel in the 10-H.P. size is 525 feet per second and 1100 in the 300-H. P. size. The makers claim that these reductions are made not so much for the difficulties arising in the turbine construction as for economic reasons.

In the discussion of efficiencies, for the sake of simplicity all references to the quantitative effect of friction were omitted. In practice this feature merits close attention. In the chapter on entropy, it was shown that when one mass moved over another friction was created. This friction increases in turbines with the density of the steam and velocity of the moving vanes. In adiabatic expansion, considerable quantities of water are formed and the presence of this water materially increases the friction. Hence we see the economic reason of reducing the velocity of the vanes. Whilst other forms of turbines have much lower velocities, the amount of surface that the steam passes over is also materially increased and it is doubtful if the friction is any less in them.

In practice $\lambda = 17°$–$20°$, $\alpha = \beta = 30°$, $V_3 = .70 V_i$ to $.85 V_i$. The indicated work per pound of steam $= \frac{V_t^2}{2g} - \frac{.05 V_t^2}{2g} - .3 \frac{V_1^2}{2g} - \frac{V_2^2}{2g}$. With the large machines the .3 may decrease to .10 or .15.*

Curtis Turbine.—In this turbine the total expansion of the steam is divided between two to four sets of nozzles in place of being confined to one set. Further, instead of one rotating wheel absorbing the kinetic energy of the steam from each of these sets two or more such wheels are used. The latter are separated from each other by stationary discs carrying fixed vanes which alter the direction of the steam as it leaves the rotating wheels in such manner that its velocity may be partially utilized in the next

* Stodola.

rotating wheel. The diagrammatic sketch, Fig. 240, shows the loss of pressure and the gain in velocity of the steam in two sets of nozzles. In its flow through each set of stationary and rotating wheels the static pressure is practically constant whilst the velocity head is absorbed in the work of the rotating wheels. The cross-hatched area shows the division of the actual work among the

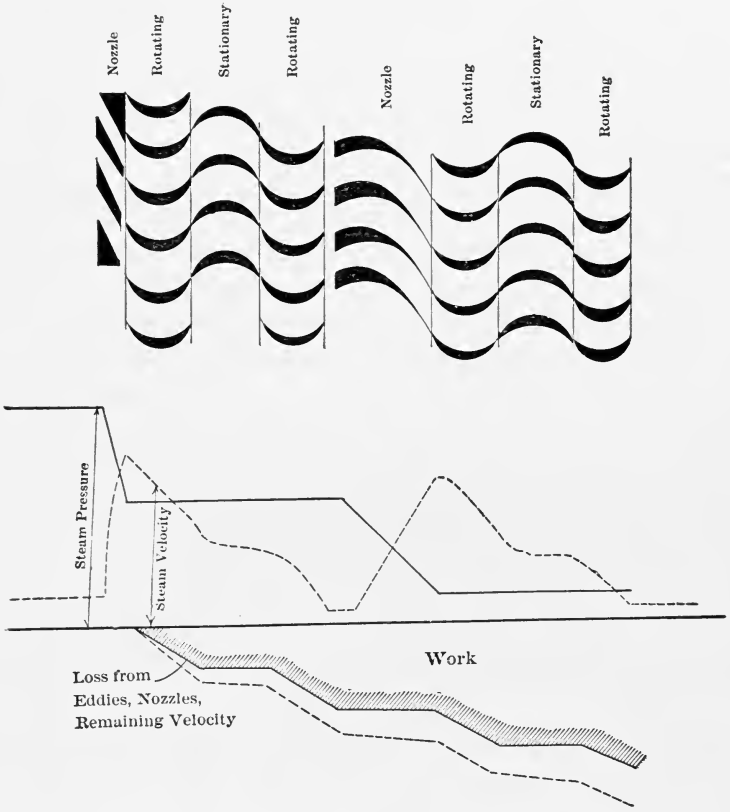

FIG. 240 —Diagrammatic Sketch of Curtis Turbine.

moving wheels, the dotted line showing the limits of the theoretical work.

In the De Laval turbine it is necessary to make V_2 as small as possible, as it represents waste velocity. We have seen that the velocity of steam leaving a frictionless and stationary vane is the same as the entering velocity. If the energy in the steam leaving

a rotating wheel is not wasted, but can be utilized in a succeeding rotating wheel, there is no necessity to reduce V_2. This permits a reduction of v, the lineal velocity of the turbine-vanes. In fact, if there are six rotating wheels, their velocity may be theoretically one-sixth that which is required when there is only one rotating wheel.

This reduction in the required velocity of the rotating vanes —without too great loss in efficiency—is extremely desirable for many mechanical reasons. In the first place the problems of construction in the turbine itself are rendered less difficult, and, in the next place, direct connection with generators becomes possible. The high speed of the De Laval turbine has to be reduced by gearing, which is not practical in large sizes; for instance, the largest De Laval turbine is a 300-kw. unit, whilst that of the Curtis type is 6000 kw.

In the De Laval turbine a defect was found in the friction that resulted from wet steam moving at high velocity past the vanes. In the Curtis turbine the velocity is lowered and the steam is drier, but there is a considerable increase in the surface over which the steam must pass. Rateau * claims that the Curtis design is an inefficient one and will disappear. On the other hand, Jacobus † asserts that "if we take the figures given for the water consumption of the De Laval, Rateau, and Curtis wheels and compare them with the results obtained for corresponding powers and pressures of the Westinghouse-Parsons turbine we will find that they are practically the same." In making comparisons care must be taken to compare turbines of similar dimensions operating at equal power. In turbines, only the delivered or brake horse-power is measured. As the friction is practically the same at all powers, it is evident that at low powers the water consumption will be excessive when compared to that at high ones of the same machine.

Fig. 241. The turbine-blade may be sketched in if we have the velocity of entrance AB, the peripheral velocity CB, and the blade-angle Δ. For AC will be the angle of the back of the blade at entrance, and if there is no friction $CD = AC$ will be the relative and CE the

* Trans. A. S. M. E., Vol. XXV, p. 788

† Ibid., p 774.

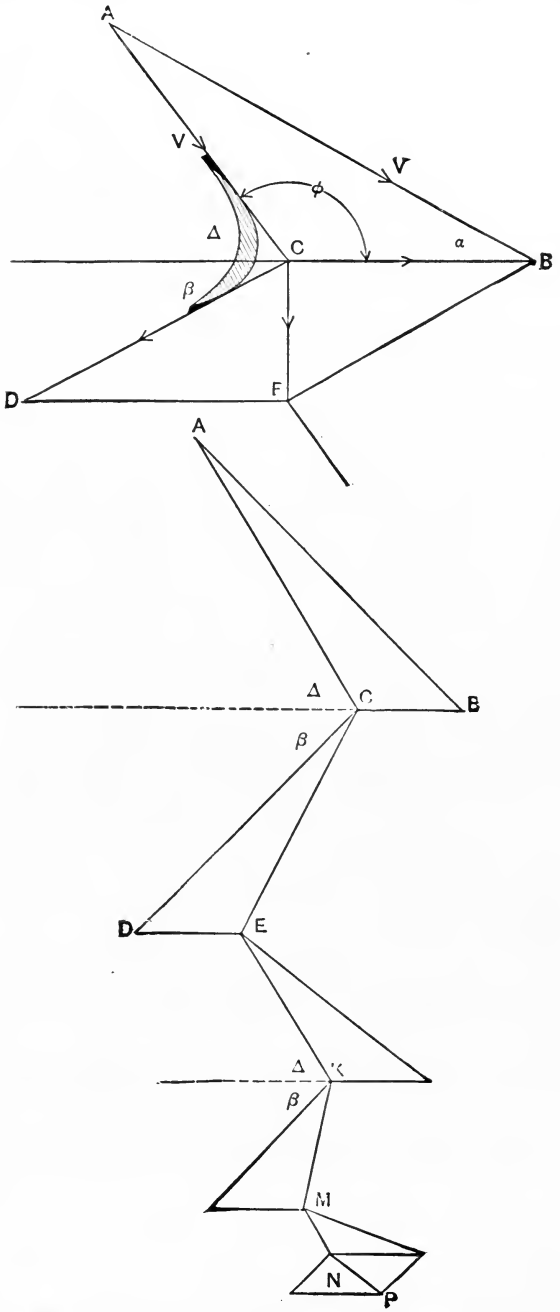

FIGS. 241 and 242. (From Thomas' Steam-turbines.)

absolute velocity of departure, as $DE = CB$. For a series of buckets, as in the Curtis turbine, where AB represents the initial velocity and NP the final velocity a diagram similar to Fig. 179 may be drawn. In this theoretical diagram $AC = CD$, $EK = KL$, etc. If the friction is to be considered then $CD = (1-f)AC$, $KL = (1-f')EK$, etc., where f, f' are the coefficients of friction.

Stodola has the following (Fig. 243):

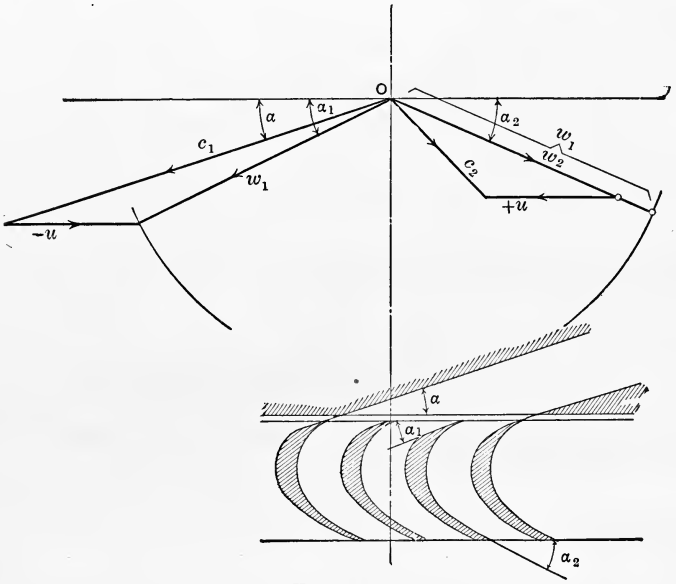

FIG. 243.

The friction in a nozzle has the effect of decreasing the exit velocity to the value

$$c_1 = \phi c_0,$$

where c_0 denotes the theoretical value

$$C_0 = \sqrt{2gL_0 778} = \sqrt{2g(H_1 - H_2)778}.$$

The coefficient ϕ can be taken in long nozzles with condensation at .95 to .90; in short nozzles with free exhaust at .95 to .975. Combining c_1 with $-u$ again gives (relative velocity) w_1, but this is decreased by friction and eddy currents during exhaust to the smaller value

$$w_2 = \psi w_1,$$

in which ψ depends upon the velocity w_1, on the form of the blades and other factors. It appears that the smallest value of ψ is .7; with smaller values of w_1, ψ would increase, and with $w_1 = 820$ feet might approximately be estimated at from .85 to .9. Finally w_2 and $+u$ give the velocity of exit c_2.

These losses by friction expressed as loss of work are, in the nozzle,

$$\frac{c_0^2 - c_1^2}{2g} = (1 - \phi^2)\frac{c_0^2}{2g};$$

in the blade-channel,

$$\frac{w_1^2 - w_2^2}{2g} = (1 - \psi^2)\frac{w_1^2}{2g}.$$

The "indicated work" per pound of steam is

$$L_1 = \frac{c_0^2}{2g} - \frac{c_0^2 - c_1^2}{2g} - \frac{w_1^2 - w_2^2}{2g} - \frac{c_2^2}{2g}.$$

The indicated efficiency,

$$\eta_1 = \frac{L_1}{L_0}.$$

The indicated power in H.P.,

$$N_1 = \frac{WL_1}{550}, \quad \text{where } (W = \text{weight of steam per second}).$$

Deducting from N_1 the wheel and bearing friction we get the effective power at the turbine-shaft, $\eta_e = \frac{N_e}{N_0}$.

In any case, if the absolute velocities at entrance to, and exit from, any wheel be resolved in the direction of motion of the buckets, or, in other words,

Let c_e and c_a = the peripheral components of the initial and final absolute velocities,

P = total peripheral force,

M = mass of steam flowing per second,

u = peripheral velocity of the wheel,

$P = M(c_a \pm c_e)$,

then work per second, Pu, $= M(c_a \pm c_e)u$. (See page 452.)

The following data and Fig. 244 are taken from Thomas on Steam Turbines:

T corresponding to 160 pounds abs. = 824° F. abs.
T " " 14 " " = 670° F. "

Steam initially dry. Velocity of turbine-blades = u = 400 feet per second. Angle of nozzles = 20°.

In the second stage the quality has been increased from the heat arising from friction from .868 to .912. In this stage, steam at 14 pounds, quality .912, is to expand to a vacuum of 29″ or a temperature of 540° absolute.

Fig. 247 illustrates the general arrangement of the Curtis turbine. The fly-ball governor at the top regulates in a positive manner the opening of one or more small pistons, shown at the right of the cut. These control the admission of steam and therefore the power of the governor.

Parsons Turbine (Fig. 248).—An examination of the diagrammatic sketch of the Parsons turbine will disclose the following peculiarities:

1. The buckets or vanes of the rotating discs of the Parsons type are carried on revolving drums.

2. The stationary vanes are carried from the casing and have no diaphragm reaching to the axle or shaft.

3. There are no nozzles as in the Curtis type. In their place are stationary vanes uniformly spaced over the entire periphery. As a result all the vanes of the turbine are in continuous use.

4. If we call a circle of stationary and a circle of revolving vanes a stage, that the number of stages is very great, ranging from 50 to 100. They are not shown in this sketch because of the scale required for clearness.

5. That the velocity of the steam increases in the stationary circle of vanes. In the revolving vanes it first decreases and then increases.

6. That the fall of pressure is practically uniform and occurs in both the stationary and revolving circles of vanes.

7. That the entering angle of the rotating vanes is almost a right angle and the leaving angle is quite acute, the shape differ-

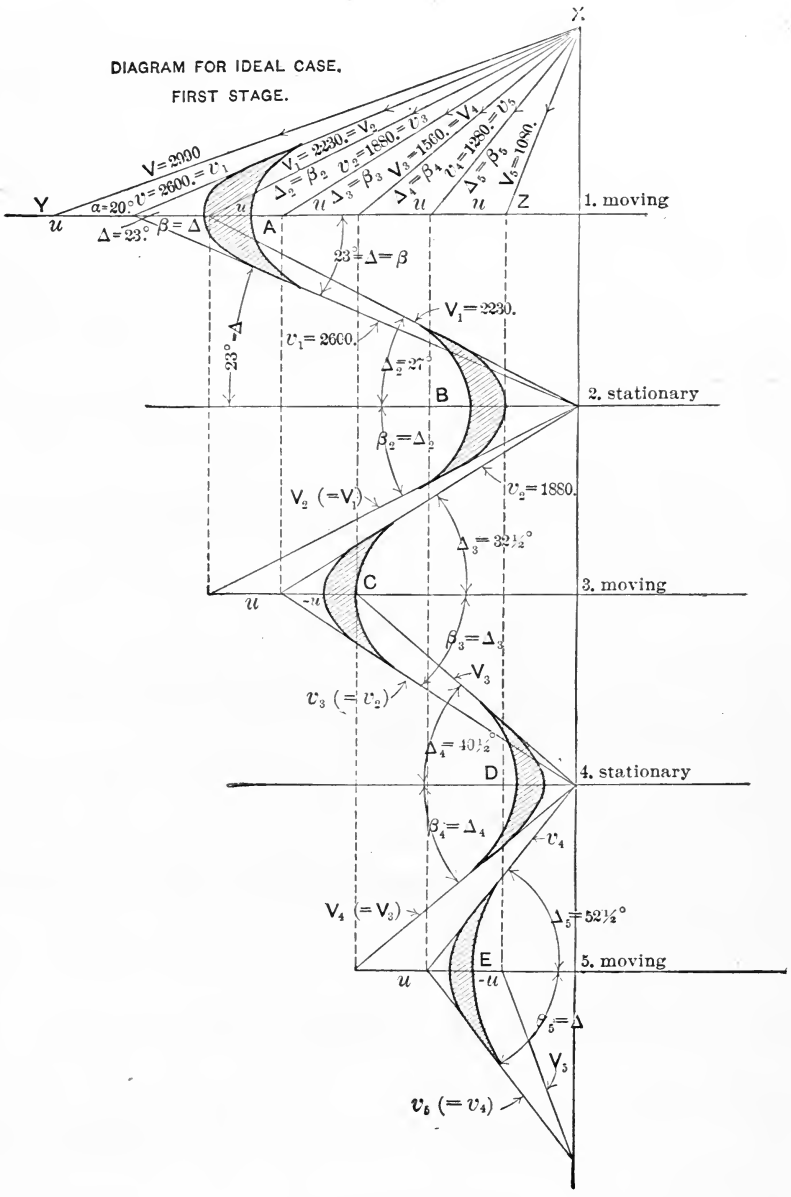
DIAGRAM FOR IDEAL CASE.
FIRST STAGE.
X
Y
Z
A
B
C
D
E
1. moving
2. stationary
3. moving
4. stationary
5. moving
V=2990
v=2600.=v1
α=20°
Δ=23°
β=Δ
V1=2230.=V2
Δ2=β2
v2=1880.=v3
Δ3=β3
V3=1560.=V4
Δ4=β4
v4=1280.=v5
Δ5=β5
V5=1080.
23°=Δ=β
23°-Δ
V1=2230.
v1=2600.
Δ2=27°
β2=Δ2
V2 (=V1)
v2=1880.
Δ3=32½°
β3=Δ3
V3
v3 (=v2)
Δ4=40½°
β4=Δ4
v4
V4 (=V3)
Δ5=52½°
β5=Δ
V5
v5 (=v4)

FIG. 244.

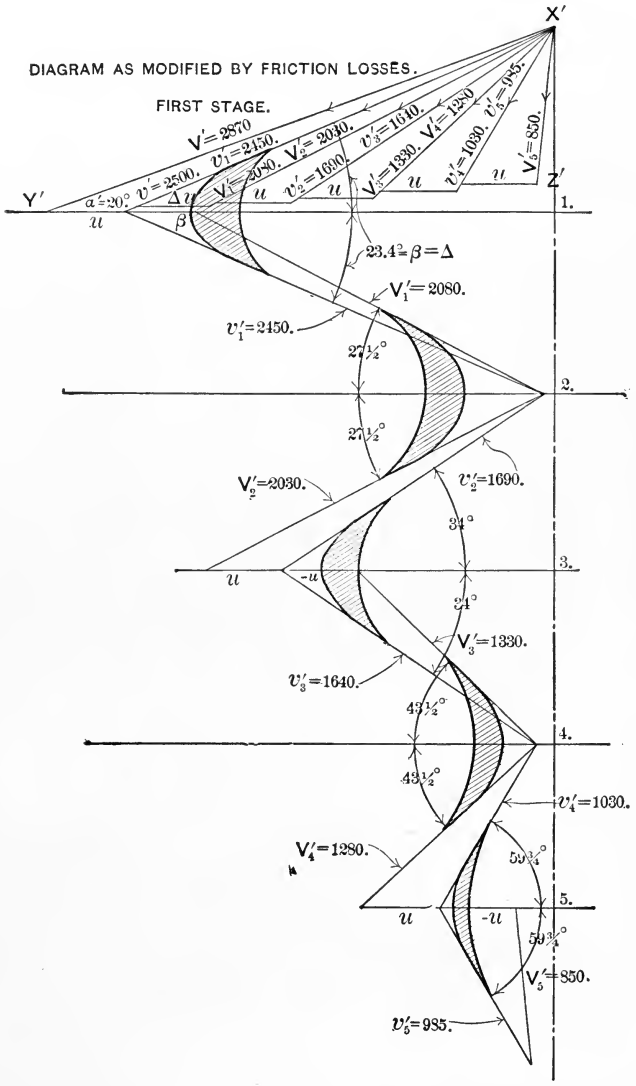

TWO STAGE IMPULSE TURBINE.

FIG. 245.

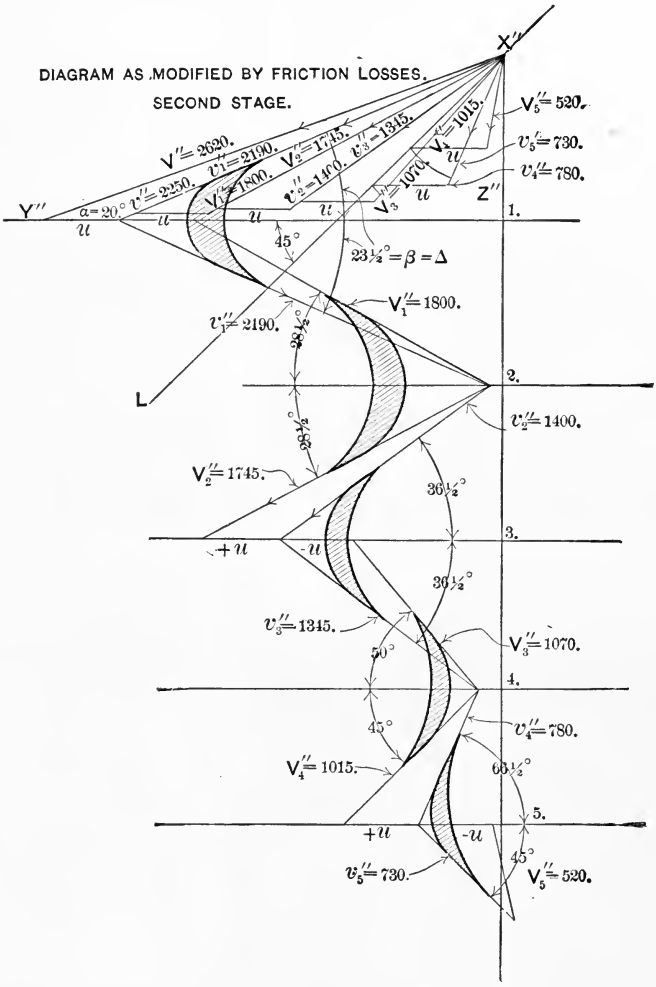

The entrance and exit angles of the buckets, whether moving or stationary, are not necessarily made equal to each other, but are modified to suit the energy distribution aimed at in any given case.

FIG. 246.

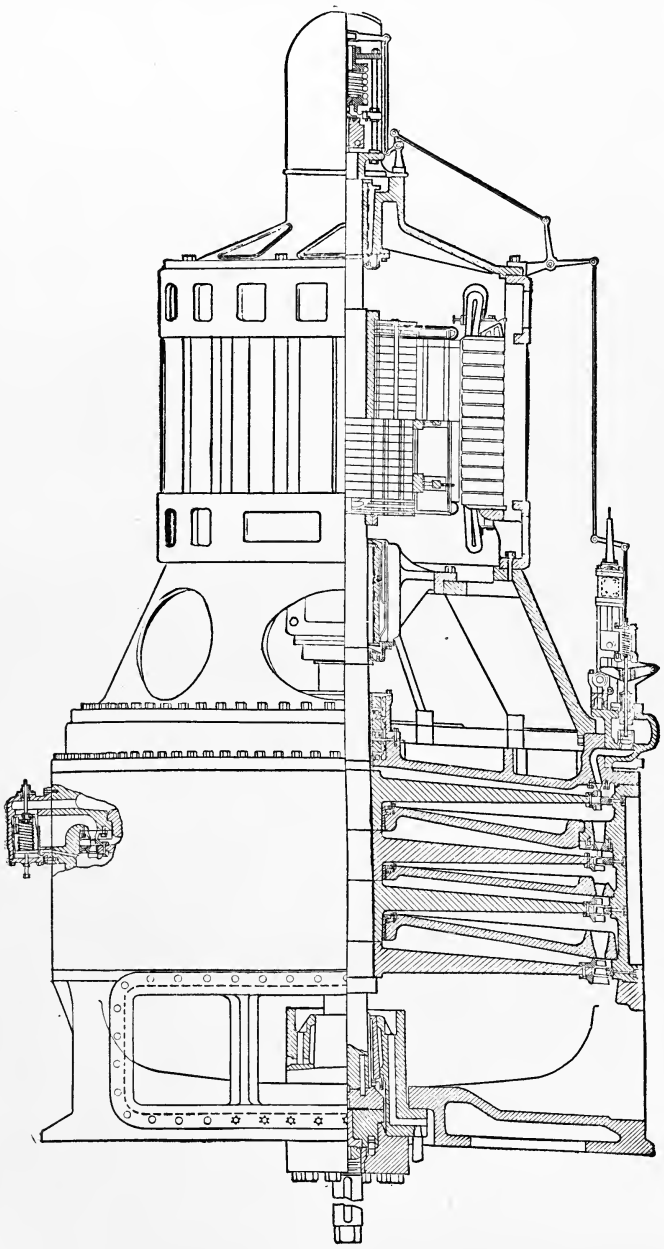

FIG. 247.

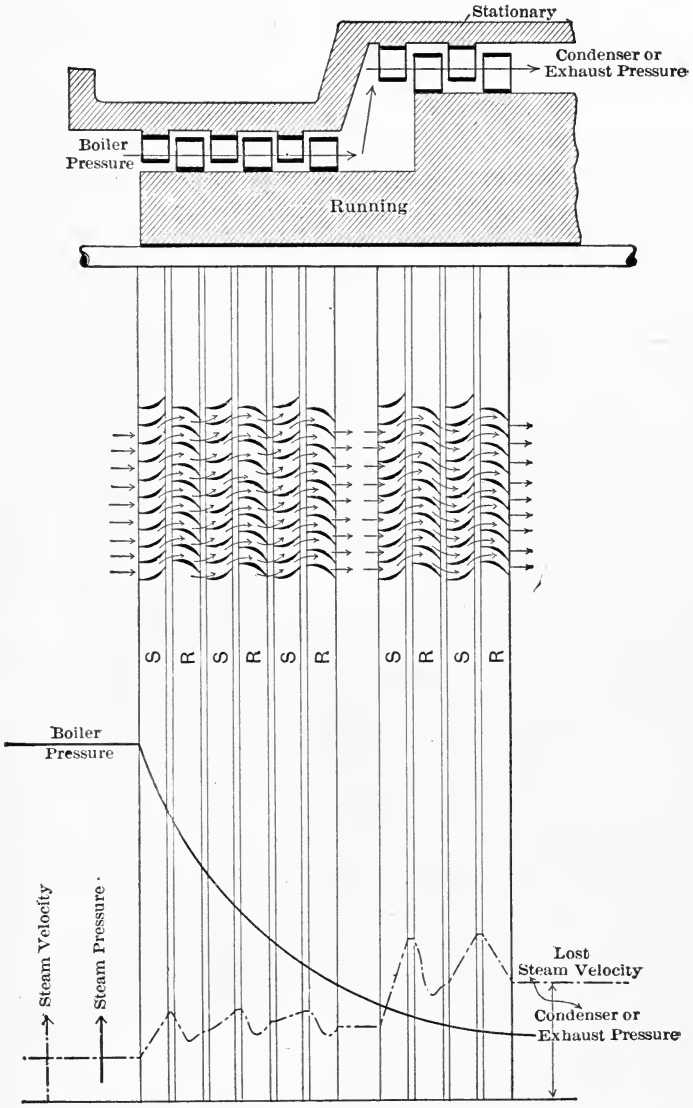

FIG. 248.—Diagrammatic Sketch of Parson's Turbine.

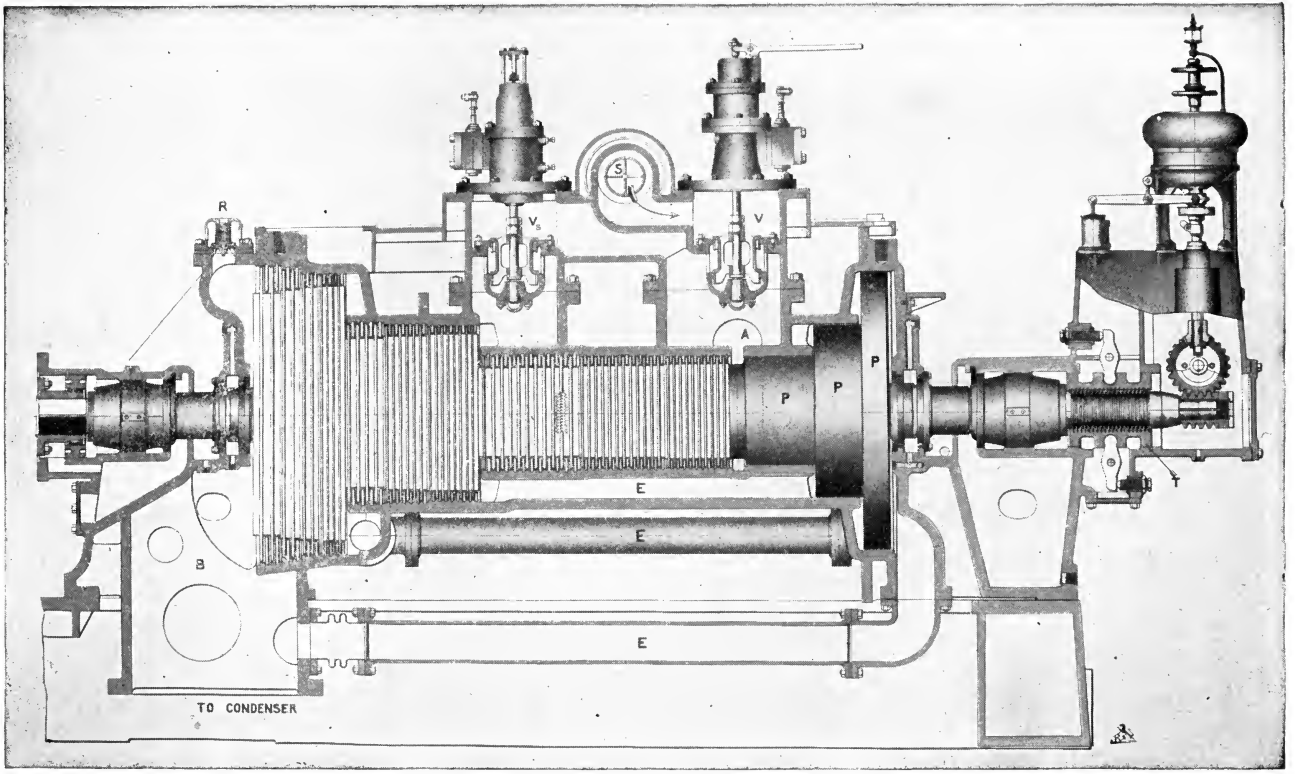

FIG. 249.

ing materially from the lunes of the Curtis type, and hence is easily recognized.

The outlet-opening between two buckets of a rotating vane being smaller than the inlet opening, compels the steam to expand and accelerate its motion, since a constant mass must pass between the vanes. Force is required to produce this acceleration, and this force produces a reaction which acts in the direction of the rotating vane. Therefore the steam acts by impulse on the entering face of the vane and by reaction on the leaving face.

In the De Laval turbine we noted that the wheel revolved in low-pressure steam, and that the pressure was nearly the same on both sides of the wheel. The Parsons turbine-vanes revolve in high-pressure steam, and the pressures are unequal and must be balanced either by balancing pistons or by an opposing turbine. The general construction of the Parsons turbine is shown in the cross-section, Fig. 249.

Clearance is objectionable, but often unavoidable. The stationary blades in the Parsons turbine are carried by the casing, and they must come as close as possible to the revolving drum to compel the steam to pass between the blades. This clearance area is annular in shape in the Curtis and in the Parsons turbine, the inner diameter of the ring in the one being the diameter of the shaft and in the other that of the steam-drum. Any vibration of the axis, due to whipping, causes a considerable motion at a radius as large as that of a drum, hence the clearance in the Parsons turbine must be greater than that in the Curtis type.

Analysis of the Parsons Turbine.—In discussing this turbine we shall consider a stationary and a revolving row of blades as making a set or stage. The kinetic energy generated by the fall of pressure in the stationary row is absorbed through its impulse on the blades of the revolving row. The reaction caused by the increase in the relative velocity from v_1 to v_2 (Figs. 250 and 250*a* is absorbed in the revolving row. The work done is then made up of three parts.

1. The total kinetic energy created by fall of pressure in the first row.

2. The reaction due to the increase of relative velocity in the second row.

3. The kinetic energy in the steam due to its absolute velocity at exit from the revolving row.

Since the velocity at entrance to the first row of stationary

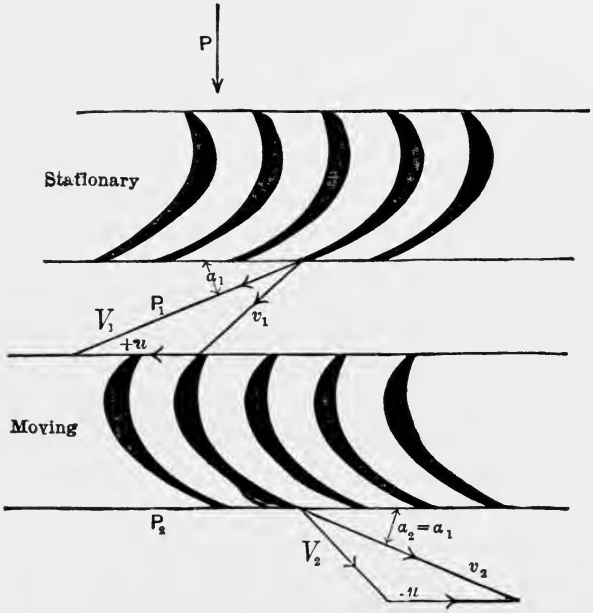

FIG. 250.

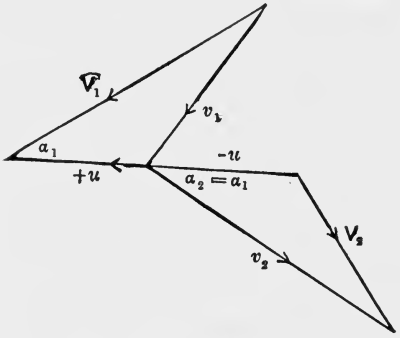

FIG. 250*a*.

blades is negligible, the total kinetic energy generated there is per pound of steam per second

$$K_s = \frac{V_1^2}{2g}.$$

The reaction work due to the increase of relative velocity from v_1 to v_2 is

$$K_m = \frac{v_2^2 - v_1^2}{2g}.$$

The kinetic energy due to the absolute velocity of the steam at exit from the first row of revolving blades is $\frac{V_2^2}{2g}$. Hence

The net work done in the first stage is $K = K_s + K_m - \frac{V_2^2}{2g}$.

The total work done in the moving blades is $K_t = K_s + K_m$.

The fraction called the "degree of reaction" is $\frac{K_m}{K_t}$.

In the second stage, if V_1 is the absolute velocity of entrance to the stationary row of blades and V_2 the absolute velocity at exit from the revolving row, and if the relative velocity in the

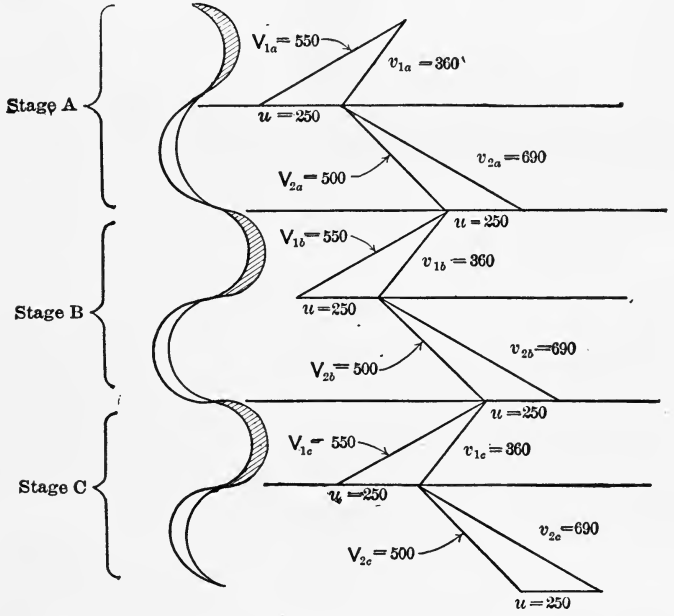

FIG. 251.

second row is increased from v_1 to v_2 as before, the net work done will be (Fig. 251)

$$\frac{V_1^2 - V_2^2}{2g} + \frac{v_2^2 - v_1^2}{2g}.$$

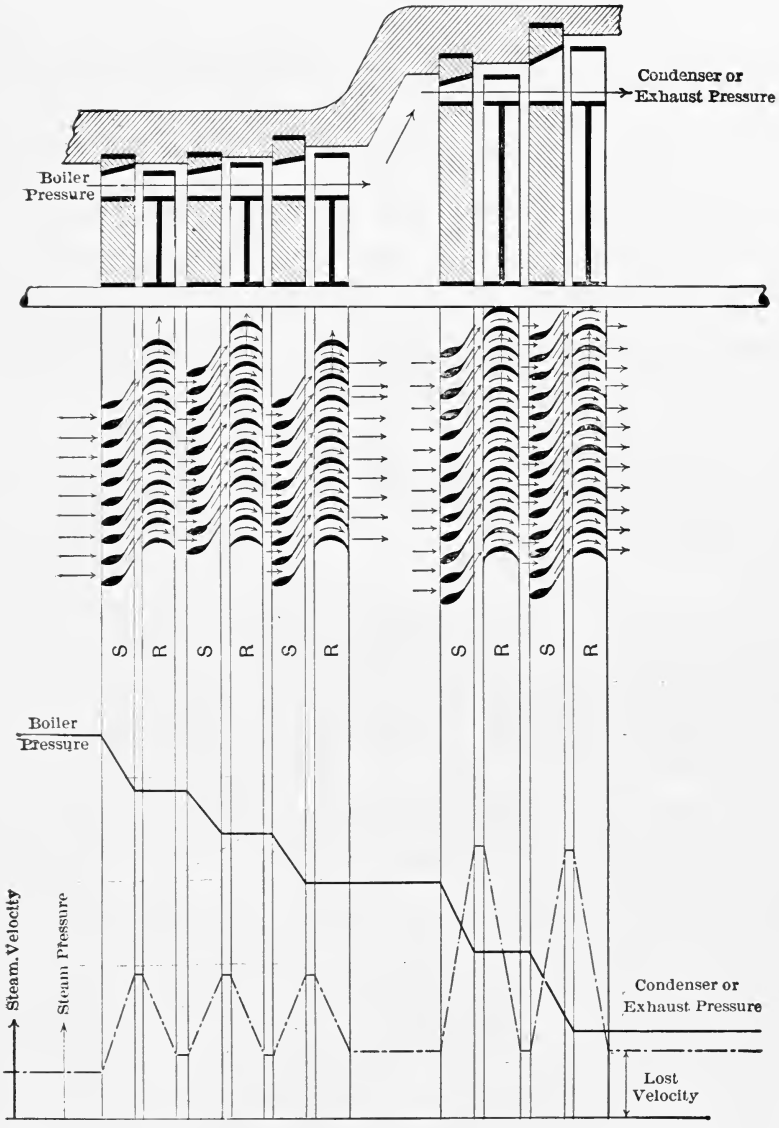

FIG. 252.—Diagrammatic Sketch of Hamilton-Holzwarth Turbines.

If there are $(n-1)$ similar stages the total work for n stages, including the first, will be

$$\frac{V_1^2}{2g}+\frac{v_2^2-v_1^2}{2g}+(n-1)\left[\frac{V_1^2-V_2^2}{2g}+\frac{v_2^2-v_1^2}{2g}\right].$$

The Hamilton-Holzwarth turbine is, like the Parsons turbine, a full-stroke turbine; that is, the steam flows in one continuous belt or veil in screw line through the turbine.

The steam works only by impact, not by reaction, thus avoiding the balancing pistons of Parsons.

In the stationary blades, which reach up to the shaft in order to restrict the dangerous clearance to a minimum, the steam has a chance to expand and reach a certain velocity and a certain direction in which it impinges the next running-wheel.

The absolute velocities of the steam in this turbine are higher than in the Parsons turbine, but they are lower than in the Curtis and much lower than in the De Laval. In this turbine the steam is expanded in every stationary blade down to a certain pressure and accelerated up to a certain velocity, which is nearly exhausted in the following running-wheel.

Steam-Engine versus the Steam-Turbine. —The steam-engine and the steam-turbine are often compared and it is desirable to point out the advantages of each. The steam-engine finds its most efficient territory in the high ranges of pressure whilst the turbine is best adapted to low ranges.* To deal with low pressures the steam-engine cylinders become enormous in size—hence difficult to construct, operate, and repair—the mechanical friction losses are excessive and the same is true of thermal losses due to varying temperature of the cylinder walls due to thermal cyclic changes. At low pressures the steam-turbine is free of these excessive mechanical and thermal losses.

A combination of the steam-engine and steam-turbine is rapidly coming into favor. A good Corliss engine with cylinder

* At high ranges of pressure the steam turbine is handicapped by the small specific volume of steam and the consequent high leakage and rotation losses which increase directly with the pressure. In reciprocating engines these losses are about constant no matter what the pressure.

ratios of 1 to 2.5 or 1 to 3.5, exhausting at 15 or 20 pounds absolute, will have at normal load an efficiency of 72% of that of the Rankine-Clausius cycle. The steam-turbine working from 15 or 20 pounds absolute down to a moderate vacuum will give 73% efficiency and 70% is guaranteed in the market. The combined efficiency (65 to 75% of the ideal cycle) is considerably higher than that given by either engine or turbine alone.

In many cases the steam-turbine can be profitably added to existing plants. The low-pressure turbine may be used in rolling mills or in certain cases where it is desirable to: (1) Increase the *capacity* of an efficient engine plant. (2) Increase the *efficiency* of an inefficient engine plant. (3) Replace an inefficient condensing plant.

That these effects may be accomplished is easily seen when we remember that a plant of non-condensing engines with a water rate of 30 or 35 pounds of water per kilowatt hour may be converted into a turbine-engine plant with a consumption of 15 or 18 pounds of water per kilowatt hour even in comparatively small sizes. In other words, for the same consumption of coal and water an increase of 80 to 100% of capacity has been obtained.

Turbine Auxiliaries.—Ideally, the efficiency of the turbine increases with each increase in the vacuum, but practically the increase is not in proportion. In other words, the efficiency, as measured at the coal pile, must consider the costs of producing excessively high vaccua. If the injection water is warm the condenser becomes inefficient owing to its inability to work with small temperature differences between the discharge water and the steam. As a result of the improvement in jet condensers there has been an interchange in the efficiency position of the surface and jet condensers.

A good surface condenser should operate within 15° difference of temperature between steam and discharge water and a good barometric condenser should operate within 10°. In practice, twice these differences are often tolerated. There are on the market condensers of the jet type that are able to operate within 2° to 5° of the steam temperature without bulky or wasteful auxiliaries. For example, assuming a cooling tower capable of

cooling the water down to the temperature of the air, 75° F., what vacuum will it be possible to maintain?

(1) A perfect condenser (no temperature difference between steam and discharge water) would require 220 volumes of water for 29 inches of vacuum. For 28 inches it would require 35 volumes.

(2) An efficient condenser of the jet type, working within 5° difference of temperature, can maintain 28 inches with 43 volumes.

(3) An ordinary jet condenser, working on 10° difference will require 57 volumes to maintain 28 inches.

(4) The ordinary surface condenser, working with 20° difference, cannot maintain 28 inches of vacuum without using the impracticable amount of 140 volumes of water.

The more efficient jet type is responsible for reducing the water consumption to one-third of that possible with the surface condensing type.*

Among the recent improvements may be mentioned the Leblanc rotary air-pump attached to ejector condensers, illustrated and described in *Engineering*, May 7, 1909. With this type of plant it is stated that the vacuum obtained is never less than 98.5% of that theoretically possible and that 99% is often exceeded, provided the joints are maintained reasonably air-tight.

Steam-turbines.—In a turbine-engine station suppose that one-half of the 500 horse-power of auxiliaries—circulating air, feed, and oil-pumps, fans for furnaces, coal-, and ash-conveyors, coal-crushers, mechanical stokers, and low-pressure water service—are in continuous use, using 100 lbs. of steam per I.H.P. and exhausting into a feed-water heater. Assuming 13,000 horse-power for the turbine and an efficiency of 14 lbs. of water per horse-power, what would be the gain in economy by driving the auxiliaries electrically and heating the feed-water by steam from an opening in the turbine casing where the normal steam-pressure is 15 lbs. per sq. in. absolute? (*Engineering*, May–April, 1906.)

---

* See papers in *Power*, by J. R. Bibbins, 1905–1909, and Rateau and Hood, 1907.

CHAPTER XVI.

GAS-ENGINES AND GAS-PRODUCERS.

Gas-engines.

The Lenoir Cycle.—This, the earliest gas-engine cycle, naturally followed the characteristics of the steam-engine cycle. It has been practically abandoned from its lack of economy. In the Lenoir cycle (Fig. 253)—

FIG. 253.

1. Gas and air are sucked in for less than half-stroke.
2. The charge is fired and there is an immediate rise in pressure at practically constant volume at this point in the stroke.
3. Expansion follows during the remainder of the stroke.
4. The piston returns, sweeping out the gases for the full stroke.

The Beau de Rochas or Otto Cycle.—We shall see from the entropy diagrams that it is economical to compress the gases in a cylinder before igniting them. The Lenoir engine was double-acting and gave trouble from overheating. To avoid these difficulties, the Otto engine is single-acting, so that the cylinder-bore and the piston, on one end, are exposed to atmospheric temperature. The following is the Otto cycle (Fig. 254).

1. The gas to be burnt and the air to support combustion are drawn past some form of governor into the cylinder during the whole of one stroke, *AB*.

2. On the return-stroke, *BC*, this gas mixture is compressed into the clearance space of the engine.

3. The gas is exploded, the piston being practically on the dead-center, and expansion during the entire stroke follows, *CD* and *DE'*.

4. The burnt gases must be swept out during the return-stroke, *E'B* and *BA*.

It is evident that there can only be one explosion and one effective stroke in four strokes or two revolutions.

In one form of the two-cycle single-acting engine, a closed vessel is obtained by encasing the engine. We must examine

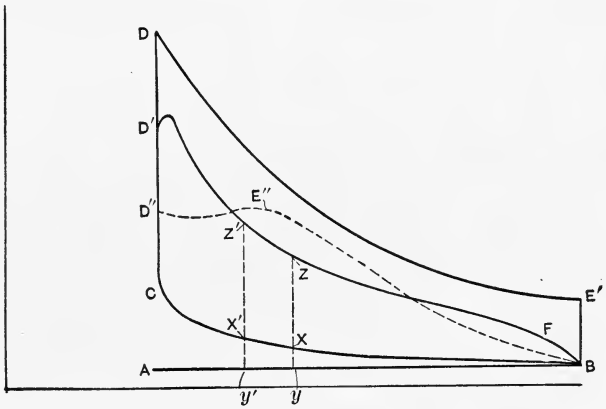

FIG. 254.

the cycle first on the crank side of the piston and then on the other side. On the compression stroke, or the stroke towards the head, air is drawn into the case. On the next or explosion stroke this air is slightly compressed. We must now examine into the events that occurred on the other side of the piston during these two strokes. After the explosion of the charge and before the expansion is completed, ports are uncovered to allow the air in the case to sweep through the cylinder and displace the burnt gases. This action is called scavenging. A further movement of the piston closes the air-ports and opens gas-ports and the gas charge is admitted. The piston now being at the end of its stroke, the return-stroke is made, compressing the mixture of gas and air.

Gas-engines, then, are divided into four-cycle, two-cycle, single-acting, double-acting, scavenging, and non-scavenging types. The more regular action of the two-cycle type is offset by its necessary air- and gas-pumps (in large engines). The short time for suction may prevent proper scavenging. Improper scavenging produces premature ignition which is unsafe in large engines. Where the burnt gases are thoroughly swept out, or where water is injected on the suction-stroke, high compression up to 400 lbs. per sq. in. may be used even with gases containing large amounts of hydrogen. The water—about a pint to the horse-power—although heated to 3500° F. will not dissociate on account of the high pressure. It, therefore, acts as a thermal fly-wheel. Combustible liquids like alcohol or kerosene could be similarly used. One great advantage of the four-cycle engine is that the time required to make the double stroke tends to secure a charge that is more thoroughly mixed and at a higher temperature than is possible in other types.

In governing-engines of any considerable size the cutting out of an entire charge is a method that is no longer used. If the gas alone is throttled, below half-load the mixture is too weak and may not explode. By throttling both air and gas the mixture will ignite properly at all loads, but with heavy throttling the internal pressure may be 6 or 7 pounds below the atmosphere, and this becomes a load on the engine. With this system, unless the compression is heavy initially under light loads, the compression will be too light and lean mixtures will not explode. In large engines the compression ranges from 170–200 pounds per square inch.

Igniters furnish much vexatious trouble. The hot-tube is no longer used except with small sizes. Low-tension magnetos are now much used, but they will give place to high-tension systems with the introduction of reliable insulation. Mica tubes and washers furnish the best insulation at present.

To keep the metal of the engine cool, much attention must be paid to the water circulation. The water must not leave deposits of any kind, the circulation must be positive in all parts, the cylinder-heads and valve-chambers meriting much attention. Pistons are cooled through hollow piston-rods.

Cooling-water required per B.H.P.-hour for engines of 200 to 1000 H.P. (quoted from the "Gas-engine"):

	Gallons.
"Cylinders, cylinder-heads, and stuffing-boxes	4 to $5\frac{1}{4}$
Pistons, piston-rods	$1\frac{3}{4}$ " $2\frac{3}{4}$
Valve boxes and seats and exhaust-valves	$\frac{7}{8}$ " $1\frac{3}{8}$

" These figures imply water entering at 53°.6–59° F. and leaving the cylinder-jackets at 77°–95° F., the pistons at 95°–104° F., and the valve seats and boxes at 113° F."

The following are approximate heat balances:

	Gasoline-motors.	Gas-engines.				
Heat converted into work	16	22	19.4	21	25	22
Heat lost to jacket-water	51	33	33	35	27	43
Heat carried off by exhaust-gases	31	44	43	40	38	36
Radiation, etc	2	1	4.6	4	10	−1
Brake horse-power	..	..	6.3	15.47	11.15	17.12
Mechanical efficiency, per cent	..	..	87	85	85	86

Relative Costs.	Cost per B.H.P. per Hour, Cents.	Cost 20 H.P. for 300 Days of 10 Hours.
"Electricity, 5 c. per Kw	5.00	$3,000
Gasoline, 20 c. per gal	2.95	1,770
Steam, coal $3.50	2.49	1,494
Gasoline, 15 c. per gal	2.33	1,398
City gas, $1 per M	2.25	1,350
Crude oil, 5 c. per gal	2.10	1,260
Gasoline, 10 c. per gal	1.70	1,020
Suction-producer, coal $4.25	1.23	738

"Depreciation, interest, and repairs were figured at 15 per cent of the first cost; oil, fuel, attendance, etc., were all added in the costs." (Quoted from "Gas-engines.") Changes in the cost of electricity and in the cost of coal, where anthracite must be used for the producer, may change these figures materially. Allow 20 cu. ft. of gas and one-eighth gallon of gasoline per B.H.P.

Alcohol may be made from substances containing either starch or sugar. In the former class we find potatoes, corn, rice, barley, and wheat; in the other class are sugar-beets and molasses from cane- or beet-sugar. Alcohol can be made from otherwise waste material, as from diseased potatoes, bitter molasses, sawdust, corn-pith, etc. By denaturizing the alcohol it may be made unfit for human consumption. This is accomplished by adding substances

that vary with the subsequent use of the alcohol. Such substances are pyradin, picolin, benzene, wood alcohol, gasoline, acetone oil—derived from the grease of sheep-wool. Wood alcohol is CH_4O. Ethyl alcohol (spirits of wine), C_2H_6O, is from the fermentation of grape-juice or glucose.

The use of small motors is growing enormously. The production of gasoline is limited, being about 2% of the petroleum obtained. The price is therefore limited by the demand. The following sums up the advantages of alcohol when compared to gasoline:

1. It can be produced as cheaply as gasoline.
2. The raw materials are illimitable, hence no fear of scarcity.
3. It is far safer. Fires can be extinguished with water.
4. It is clean and sanitary and leaves no deposits in the cylinder.
5. It can stand far more compression than gasoline in small non-scavenging engines.
6. In boats the leakage from a defective pipe will be mixed with the bilge-water and unexpected explosions prevented.
7. With high compression more power can be obtained from alcohol in small motors than from gasoline, since it is dangerous to compress the latter to an equal extent. The consumption is 1.1 pints to the B.H.P. in a 10-H.P. motor.

Calorific Power of Gases.—The calorific power of a compound gas, which can be burnt or oxidized, should not be computed from the calorific power of its component elements, as heat may have been given out or may have been absorbed when its elements united in its formation. For example, the calorific power of 16 pounds of marsh-gas, CH_4, computed from its elements would be

$$C = 12 \times 14{,}500 = 174{,}000,$$

$$H = 4 \times 63{,}000 = 252{,}000,$$

or

$$\frac{426{,}000}{16} = 26{,}600 \text{ per lb.}$$

By actual experiment the calorific power is 23,600, or a difference of 3000 B.T.U. On the other hand, acetylene gives out

more heat than that derived from a theoretical computation. In one pound of acetylene there is .923 pound of C and .077 pound of H. Therefore

$$C = 14{,}500 \times .923 = 13{,}383$$
$$H = 63{,}000 \times .077 = 4{,}851$$
$$18{,}234$$

From experiment the actual heat-equivalent is 21,500, or an excess of 3266 B.T.U.

We shall need the following calorific powers:

Marsh-gas (methane), CH_4	21,000 B.T.U.
Olefiant gas, or ethylene, C_2H_4	18,900 "
Acetylene	20,750 "

From the above the heat-equivalent of any mixture of these gases may be obtained, as in the following example:

	Pounds.		
Marsh-gas	2.34	× 21,000 =	49,140
Ethylene (olefiant gas)	.13	× 18,900 =	2,457
Hydrogen	.60	× 63,000 =	37,800
Carbon monoxide	20.32	× 4,500 =	91,440
Nitrogen	60.17		
Carbon dioxide and oxygen	16.44		
	100.00		180,837
Thermal units per pound		=	1808

If the weight of the gas per cubic foot is known, then the thermal value per 1000 cubic feet may easily be calculated.

Rise in Temperature in Gas Combustion.—The theoretical rise in temperature due to the heat liberated in combustion may be calculated if we make certain assumptions:

1. That the gases are burnt in a non-heat-absorbing chamber, so that all the heat is spent in raising the temperature of the gases.

2. That we know the weights of the gases composing the mixture and their specific heat either at constant volume or at constant pressure, depending upon the corresponding conditions of combustion.

Hence, if W_1, W_2, W_3, W_4, W_5 represent the weight of the gases

present, and C_1, C_2, C_3, C_4, C_5 represent the proper specific heats, then $H = (W_1C_1 + W_2C_2 + W_3C_3 + W_4C_4 + W_5C_5)T$,

where H = total heat of combustion,
T = rise in temperature.

It is evident if W_4 and W_5 represent gases that were not or could not be burned that the resulting rise in temperature would be very much less than it would have been had they been absent. Thus, when gases are burned in air the necessity of raising the temperature of the non-combustible nitrogen decreases very materially the possible rise in temperature of the whole mixture.

Producer-gas (Figs. 255, 256, and 257).—In the gas-producer air passes in and burns part of the fuel—coal or coke—into CO_2.

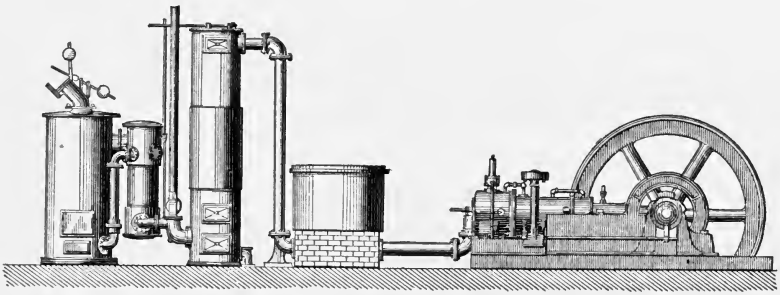

FIG. 255.

The nitrogen of the air and the CO_2 rise, and the latter, if the temperature is high enough, may break up into 2(CO). Very little use could be made of this CO on account of the large amount of inert nitrogen that accompanies it.

Suppose, however, we blow steam on the red-hot coals also, the steam will be decomposed, thus: $C + H_2O = CO + 2H$.

The CO obtained in this way is unaccompanied by inert nitrogen, but, on the contrary, carries with it a large percentage of H which has high calorific power. Evidently the more steam that is decomposed the better, but it requires heat to decompose the steam and this heat must be supplied by the heat evolved when the air unites with carbon to form carbon monoxide. The relation that exists between the amount of CO formed by the "air-

burned carbon" and that formed by the "steam-burned carbon" is, theoretically, that of equality as indicated below.

In the formula $C+H_2O=CO+2H$ we may say that 2 pounds of H and 16 pounds of O united with 12 pounds of C to form 28 pounds of CO and 2 pounds of H.

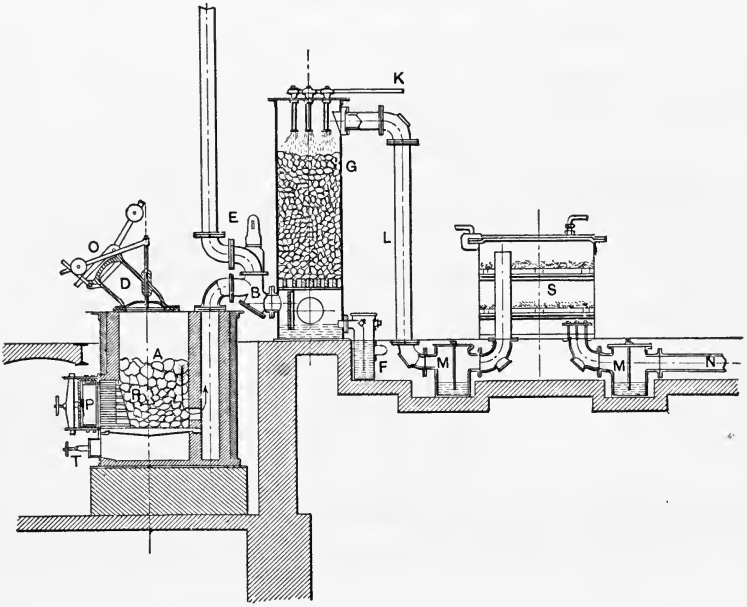

FIG. 256.

Heat absorbed (per pound of H) in the separation of H and O when combined in the form of steam $=63,000-9[966+(212-32)]$	$-52,500$
Heat given out in burning 6 pounds of C to CO $=6\times4500$	$+27,000$
	$-25,500$
Heat absorbed for each pound of carbon burned by the steam $=25500/6$	$=4,250$

As 4500 thermal units are liberated by the "air-burned carbon" per pound, and this must provide for all heat radiated and otherwise wasted, it is evident that the percentage of car-

bon that may be steam-burned must be very much less than that which is air-burned. It is feasible to burn 3 pounds of carbon with air to 1 pound of steam-burned carbon.

		If air is a mixture of $\frac{3}{5}O+\frac{2}{5}N$.	
3 lbs. C+4 lbs. O	= 7	lbs. CO @ 12.8 cu. ft. per lb.	= 89.6
Nitrogen with 4 lbs. O	=14	" N @ 12.77 " " "	=178.78
1 lb. C burned to CO by steam	= 2.33	" CO @ 12.8 " " "	= 29.82
To furnish $1\frac{1}{3}$ lbs. of O requires $\frac{4}{3}\div 8$	= .17	" H @ 178.93 " " "	= 29.82
	23.5 lbs. gases		328.02 cu. ft.
Cubic feet per pound of gas	=328.02÷23.5		= 14

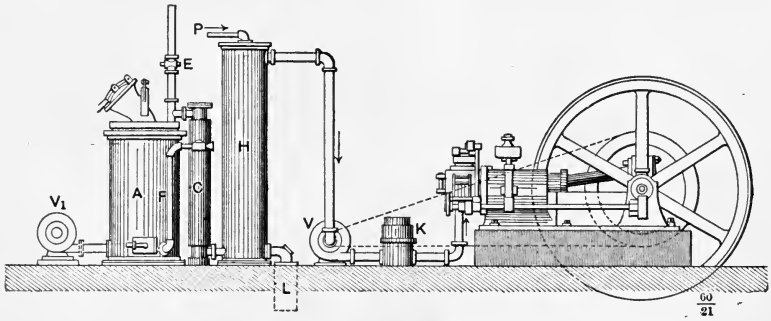

FIG. 257.

Expressed in percentage the gas has the following volume and weight.

		Volume.	Weight.
Carbon monoxide,	CO.....	36.4%	39.7%
Hydrogen,	H.....	9.1	.7
Nitrogen,	N.....	54.5	59.6

In finding the heat liberated when one pound of CO is burned to CO_2 it is necessary to find the amount of C burned. Further, we must remember that if one pound of C burned to CO gives 4500 B.T.U. and 14,500 if burned to CO_2 it will follow that for each pound of C in carbon monoxide only 10,000 B.T.U. will be liberated when that gas is converted into CO_2.

The heat-equivalent of the above gas will be:

$$.397\times\frac{10000}{2\frac{1}{3}}=1707,$$

$$.007\times 53000=\frac{371}{2078}\text{ B.T.U.}\quad\text{or}\quad\frac{2078}{14}=148\text{ B.T.U. per cu. ft.}$$

We have seen that the adiabatic compression of air is accompanied by a great waste of power if the air is to be conveyed through long pipes, as the air will lose all heat due to temperature above its surrounding envelope from conduction, radiation, etc. In a similar way producer-gas often loses all its heat above that due to atmospheric temperature. To purify the gas it is led through scrubbers and it comes into intimate contact with streams of water. Producer-gas is, in general, an agent to produce heat at some place other than at the place where the gas was generated. It is desirable, then, to convert all heat generated in the producer into some form of latent energy similar to the molecular separation in the case of steam.

Gas from Soft Coal.—Anthracite and coke are alone used as fuel in gas-producers in combination with gas-engines in small plants. The high cost of anthracite prevents competition with steam-engines in many cases. By the use of soft coal a much richer and cheaper gas may be made. The difficulties to be overcome lie in the presence of tar, ammonia, dust, and other residual matter. Caking coals cannot be used, as they melt and stop the passage of the gases. In large plants, scrubbers of various kinds are used as well as dust-collectors.

The tarry deposits have always given trouble. In recent producers, however, by the use of under-feeding, these deposits are brought into contact with hot fuel and are decomposed, giving free H and marsh gas. Professor Fernald, at a meeting of the A. S. M. E., read a paper on "Results of the Preliminary Producer-gas Tests by the U. S. Geological Survey Coal-testing Plant at St. Louis." A brief summary of this paper in the shape of tables of twenty-four of the principal tests is given in *Power*, January, 1906. "The experience gained during these tests showed that neither a purifier nor an economizer is required in order to use bituminous coal." These tables give the average composition of the gas from coals from various parts of the country by volume, the number of cubic feet per pound of coal, and the heat-units per cubic foot of gas. The third table gives economic results of the use of the gas. In general, a cubic foot of gas gave 140–150 B.T.U., but the number of cubic feet of gas per pound of coal varied from 25 to 82.

Calculation of Pressure in the Gas-engine.—Theory and practice always agree when the theory has been derived from a consideration of *all* the facts. If a definite weight of gas of known composition mixed with a definite weight of air is fired, after having been drawn into a gas-engine and compressed into a definite clearance space, the resulting pressure will ordinarily be less than half the expected pressure. As a definite amount of heat is liberated which should result in a definite rise in temperature and pressure, there must be a source of heat loss. This is found in the heat absorbed by the cylinder walls. This one fact compels us to resort finally to experiment under actual conditions to obtain accurate results.

For example, the mixture that gives the highest pressure will not develop the most power in a given engine. Suppose a mixture of one part gas and four parts air gave a very high theoretical temperature and pressure, the heat loss to the walls would be high, due to the high temperature of the gas. Suppose that to the same weight of gas double the volume of air were used, the temperature of the gas would be lower, the heat loss less, and the heat remaining in the gas greater. We may or may not get more work out of the new mixture. Whilst there is more heat in it, this heat is at a lower temperature.

Brannt records experiments made with mixtures of oil-gas specific gravity .68:

Oil-gas, Volumes.	Air, Volumes.	Explosive Effect.
1	4.9	None
1	5.6 to 5.8	Slight
1	6 to 6.5	Heavy
1	7 to 9	Very heavy
1	10 to 13	Heavy
1	14 to 16	Slight
1	17 to 17.7	Very slight
1	18 to 22	None

Even if the best mixture of gas and air is used, three-fourths to four-fifths of the heat is wasted either in the jackets, exhausts, or radiation.

Indicator- and Entropy-cards.—The theoretical cards from 4-cycle and 2-cycle engines using any explosive mixture are identical. The card from the Diesel oil-engine, however, differs in

a few particulars. The practical card, Fig. 189*b*, differs very materially from the theoretical one, taking some such form as *ABCD'FBA*, or, when the engine is not properly adjusted, some such form as that indicated by *ABCD''E''BA*.

The entropy analysis given below is based on an article by Professor Reeve, Trans. A. S. M. E., Vol. XXIV.

The line *AB* of the indicator-card (Fig. 254) is represented by the point *B* in the entropy diagram (Fig. 258), since the position

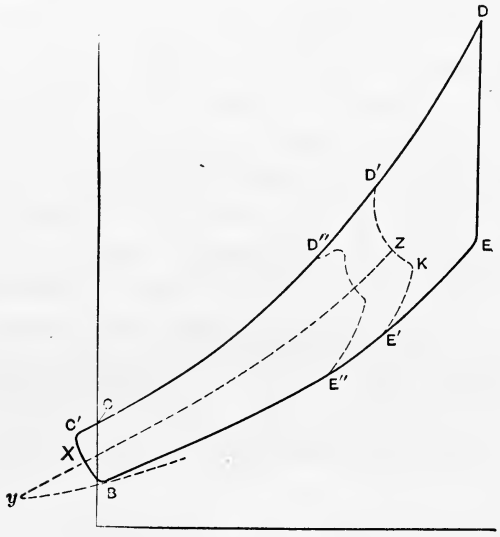

FIG. 258.

of *B* is sufficient to indicate the thermal characteristics of the full gas charge. If the compression is truly adiabatic, *BC* is the course of our tracing-point. If the walls absorb heat there will be a loss of entropy, and the tracing-point will wander to the left. The charge is fired and the gas is heated at constant volume, so that the piston is practically stationary during the formation of lines *CD* or *C'D'*. To prevent overheating the cylinder walls, a water-jacket which abstracts heat and wastes it must be applied for mechanical reasons. Its effect in decreasing economy is seen in the difference of the positions of *D* and *D'*. If the expansion were truly adiabatic the straight line *DE* would be followed. A careful plotting of the entropy changes would give some such

line as $D'ZE'$. The initial decrease in entropy of the line $D'Z$ indicates a very rapid loss of heat, but the swerving of the curve ZK to the right indicates the reception of heat by the gas from the cylinder walls. This action is similar to the re-evaporation of condensed steam toward the end of the stroke in a steam-engine. The line EB indicates expansion at constant volume.

To draw the entropy diagram of the Otto cycle the following artifice and form will be found useful.

On the indicator-card (Fig. 254) and the entropy diagram (Fig. 258) let us suppose the suction-stroke line AB has been made. Let us ideally compress the gas from B at constant pressure (abstracting heat) along the line BA till some point y is reached. Then let the gas be heated at constant volume, thus tracing the line yXZ perpendicular to AB in the indicator card. At the points X and Z the temperature and entropy of the gas would be identical with that required by those points on the indicator diagram. The point y is an auxiliary that will disappear. At the points B and y we are dealing with the same mass of a perfect gas, hence

$$\frac{P_B V_B}{T_B} = \frac{P_y V_y}{T_y}.$$

Cooling constant mass at constant pressure,

$$\frac{T_B}{T_y} = \frac{V_B}{V_y}.$$

Heating at constant volume,

$$\frac{T_y}{T_x} = \frac{P_y}{P_x} \quad \text{or} \quad \frac{T_y}{T_z} = \frac{P_y}{P_z}.$$

At the points X and B we are dealing with the same mass of a perfect gas, hence we may write

$$\frac{P_x V_x}{T_x} = \frac{P_B V_B}{T_B}.$$

$$\therefore \log \frac{T_x}{T_B} = \log \frac{P_x}{P_B} - \log \frac{V_B}{V_x}.$$

The ratio of one pressure to another, or of one volume to another, is easily found if both are measured on a fine decimal scale. Divide the indicator-card into a series of two points, such as (X, Z), (X', Z'), etc., and tabulate the ratio

$$\frac{P_x}{P_B}, \frac{P_z}{P_B}, \frac{P_{x'}}{P_B}, \frac{P_{z'}}{P_B}, \ldots, \frac{V_B}{V_x}, \frac{V_B}{V_z}, \frac{V_B}{V_{x'}}, \frac{V_B}{V_{z'}}, \ldots.$$

The value of T_B must be assumed. It lies between 600° F. and 670° F. (absolute). The absolute values of all derived quantities are affected by the uncertainty in the absolute value of T_B, but the relative values are absolutely unaffected. Making this assumption the values of the temperatures at all points are obtained from the equation

$$\log \frac{T_x}{T_B} = \log \frac{P_x}{P_B} - \log \frac{V_B}{V_x}.$$

From the ideal method of obtaining the points y and X we may write our entropy equation

$$\phi_x - \phi_y = C_V \log_\epsilon \frac{T_x}{T_y} \quad \text{and} \quad \phi_B - \phi_y = C_P \log_\epsilon \frac{T_B}{T_y},$$

C_V and C_P being the thermal specific heats at constant volume and constant pressure.

By subtraction

$$\begin{aligned}
\phi_x - \phi_B &= C_V \log_\epsilon \frac{T_x}{T_y} - C_P \log_\epsilon \frac{T_B}{T_y} \\
&= C_V \left(\log_\epsilon \frac{T_x}{T_y} - 1.404 \log_\epsilon \frac{T_B}{T_y} \right) \\
&= 2.3026\, C_V \left(\log_{10} \frac{T_x}{T_y} - 1.404 \log_{10} \frac{T_B}{T_y} \right) \\
&= 2.3026\, C_V \left(\log \frac{P_x}{P_B} - 1.404 \log \frac{V_B}{V_x} \right)
\end{aligned}$$

as $P_B = P_y$ and $V_x = V_y$.

As a rule only relative values of entropy are required, hence the coefficient 2.3026 C_V may be omitted.

In the following form the term $1.404 \log \frac{V_B}{V_x}$ is placed first, to bring together the two quantities whose difference is desired.

Suppose $\frac{V_B}{V_x} = 1.49$, its log $= .1732$ . . . . . (1)

$.4 \times$ " " $= .06928$

$.004 \times$ " " $= .00069$

$.2432$

" $\frac{P_x}{P_B} = 1.778$, " " $= .2499$ . . . . . (2)

$\phi_x - \phi_B = .0067$

" $\frac{P_z}{P_x} = 3.602$, its log $= .5565$ . . . . . (3)

as $\phi_x - \phi_B + \log \frac{P_z}{P_x} =$ $\phi_z - \phi_B = .5632$

Subtracting (1) from (2), since $\log \frac{T_x}{T_B} = \log \frac{P_x}{P_B} - \log \frac{V_B}{V_x}$,

$$\log \frac{T_x}{T_B} = .0767.$$

Assume $T_B = 600°$ F. A., $\log 600 = 2.7781$

$\log T_x = 2.8548$ . . . (4)

$T_x = 715.8°$ F. A.

$t_x = 255°$ F.

Adding $\log \frac{P_z}{P_x}$ to $\log T_x$, $(3) + (4) = \log T_z = 3.4113$

$T_z = 2578$ F. A.

$t_z = 2117°$ F.

Therefore, noting the use of ratios:

1. With the slide-rule set to the initial absolute pressure, take each point on the card in turn, divide the pressure at

that point by the initial pressure, and note the logarithm of the result.

2. With the slide-rule set to the total length of the indicator-card (including clearance) divide it by the total volume at each point of the card in turn, and obtain the logarithm of the quotient.

3. Add to (2) $\frac{404}{1000}$ of itself by slide-rule or by arithmetic.

4. The difference found by subtracting (3) from (1) is the *entropy* of the desired point.

5. The difference found by subtracting (2) from (1) is the logarithm of the temperature ratio; this logarithm should be set down at one side.

6. With the slide-rule set to the initial absolute temperature enter the table of logarithms with (5), and multiply its number by the initial absolute temperature; the result is the absolute temperature of the desired point. Thus, let $T_B = 600°$ F. A.:

(1) $\log \frac{P_x}{P_B}$	$=0.2499$	(4) Entropy	$=0.0067$
(2) $\log \frac{V_B}{V_x}$	$=0.1732$	(5) $\log \frac{T_x}{T_B}$	$=0.0767$
$\frac{4}{10}$ of ditto	$=0.06928$	(6) T absolute	$= 715.8$
$\frac{4}{1000}$ of ditto	$=0.00069$		460.9
(3)	$= 0.2432$	T Fahrenheit	$=255°$ F.

In this way some twenty points, or sufficient for an entire analysis, can be calculated and plotted inside of an hour.

A natural gas has the following composition:

Carbon dioxide (and H_2S)	1.80	per cent
Oxygen	.70	" "
Hydrocarbon	.50	" "
Carbon monoxide	.55	" "
Hydrogen	.60	" "
Methane	92.05	" "
Nitrogen	3.80	" "

What is the thermal value of this gas per cubic foot? Assuming its value at 1000 B.T.U per cubic foot, what would be the efficiency of a gas-engine using 12.7 cubic feet per B.H.P. With a thermal efficiency of 27.6%, how many cubic feet of gas will a $13'' \times 14''$ engine use making 257 revolutions per minute? Assume a clearance of 20% and a mixture of gas and air in the proportion of 1 to 11, what will be the theoretical temperature and pressure after an explosion, the piston being on the dead-center?

Diesel Cycle.—In this remarkable cycle—

1. The air alone and not the explosive mixture is compressed.
2. The degree of compression exceeds that of all other types.
3. This compression is adiabatic and nothing is done to make it isothermal.
4. The degree of compression is so great that the temperature causes spontaneous combustion, as the charge or combustible is forced in at a higher pressure.
5. Just as powder for cannon is made in grains as large as an inkstand to delay combustion and produce a uniform rather than a rapidly diminishing pressure, so in this motor the charge is supplied gradually for the same purpose.

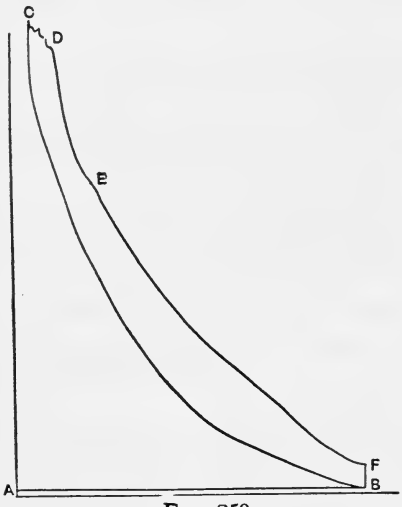

FIG. 259.

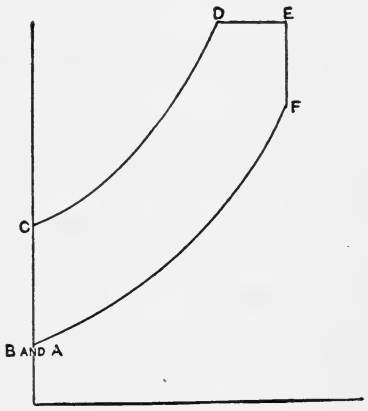

FIG. 260.

The indicator-card and entropy diagram are represented in Figs. 193 and 194, but not to scale. The diagrams are lettered to

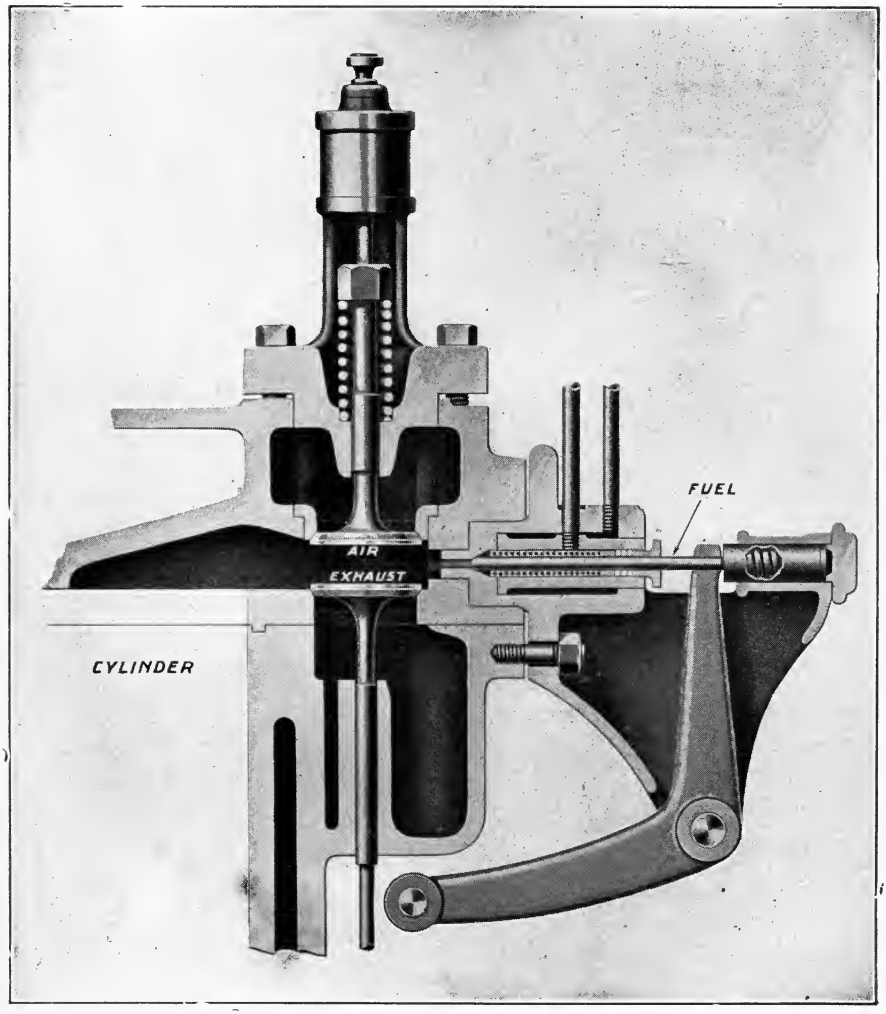

FIG. 261.—Valves of Diesel Engine.

indicate the same events. *AB* is the suction; *BC* is the compression; *CD* is the preliminary and *DB* the after or isothermal heat lines due to the gradual combustion of the injected oil; *EF* is the adiabatic expansion line; and *FB* is the expansion line at constant volume. Operating between 500 and 35 pounds per square inch, this motor has an efficiency ranging between 36 and 45%. The following data are from the Journal of the A. S. N. E., November, 1905:

	Trial	Trial	Trial	Trial
Date	Feb. 13	Feb. 14	Feb. 14	Feb. 14
Time	3.55 P.M. to 5.55	9.17 A.M. to 11.12^{15}	11.21^{15} to 1.30^{15}	2.01^{30} to 2.59^{3}
Duration, minutes	120	115.25	129	58
Diam. of cylinders, inches	22.05			
Stroke of pistons, feet	2.4605			
Revs. per min.	150.16	152.8	150.3	150.2
Jacket-water per min.	166.8	169.85	157.85	140
Initial temp. of jacket-water, ° F.	46.3	46.3	46.3	46.3
Final temp. of jacket-water, ° F.	125	127.4	104.6	82
Temp. of outside air, ° F.	48	48	48	48
Temp. of exhaust-gases, ° F.	783	806	496	275
Analysis of exhaust-gases: CO_2	5.6	6.8	3.2	
" " " N	42.9	51.3	21.5	
" " " Air	51.5	41.9	75.3	
Oil used, pounds	390.3	398	221.1	44.23
Oil used per hour, pounds	195.1	207.2	102.8	45.76
Blast pressure, atmospheres	61.5	66.3	50.9	35
Max. pres. shown by indicator diagrams in pounds per sq. in.	510 515 525	515 525 500	490 480 505	485 480 500
M.E.P., pounds per square inch:				
On first piston	82.9	80.7	51.6	23.2
On second piston	92.3	93.9	52.6	20.1
On third piston	110	115.6	64.8	33.9
Average in the three cylinders	95.05	96.7	56.33	25.4
Indicated horse-power	609.3	634.8	363.6	163.3
Oil per I.H.P. per hour-pounds	.3202	.3264	.2828	.28
Output of dynamo, kw.	333	352	168.2	22.24
Brake H.P. of engine	475.5	502.5	245	54.6
H.P. absorbed in friction	133.8	132.8	118.6	10.87
B.H.P./I.H.P.	.78	.805	.675	.334
Power absorbed by motor, kw.	38	41	31.6	23.6
H.P. given out by motor	44.8	48.3	36.8	26.2
I.H.P. in compressor cylinders	36	40	28.8	18.2
Power absorbed in belt and compressors, H.P.	8	8	8	8
Estimated B.H.P. of engine	435.1	458.7	213.8	32.4
Estimate of mech. effic. if pump had been driven by engine	.715	.723	.588	.198
Oil per brake H.P., pounds	.444	.451	.481	1.415

	Trial I.		Trial II.	
	B.T.U.	Per Cent.	B.T.U.	Per Cent.
To calorific value of one pound of oil.....	20,050	100	20,050	100
By heat-equivalent to work done.....	7,944	39.6	7,794	38.9
By heat carried off in jacket-water.....	4,070	20.3	4,110	20.5
By heat carried off in exhaust-gases.....	7,030	35.1	6,056	30.2
By radiation and error.....	1,006	5	2,090	10.4
To calorific value of oil used per H.P. per min.	107	100	109	100
By heat-equivalent to work done.....	42.4	39.6	42.4	38.9
By heat carried off in jacket-water.....	21.7	20.3	22.3	20.5
By heat carried off in exhaust-gases.....	37.5	35.1	32.9	30.2
By radiation and error.....	5.4	5	11.4	10.4

	Trial III.		Trial IV.	
	B.T.U.	Per Cent.	B.T.U.	Per Cent.
To calorific value of one pound of oil.....	20,050	100	20,050	100
By heat-equivalent to work done.....	8,998	44.9	9,078	45.3
By heat carried off in jacket-water.....	5,300	26.4	6,570	32.8
By heat carried off in exhaust-gases.....	7,200	35.9	4,402	21.9
By radiation and error.....	1,438	−7.2		
To calorific value of oil used per H.P. per min.	94.5	100	93.6	100
By heat-equivalent to work done.....	42.4	44.9	42.4	45.3
By heat carried off in jacket-water.....	25	26.4	30.6	32.8
By heat carried off in exhaust-gases.....	33.9	35.9	20.6	21.9
By radiation and error.....	−6.8	−7.2		

"The air for pulverizing the oil and spraying it into the cylinders was compressed in an independent pair of three-stage vertical air-compressors, worked by a two-throw crank-shaft, belt-driven by a motor receiving current from the dynamo upon the engine crank-shaft. This wasteful arrangement—as compared to driving the compressors direct—was adopted to meet special conditions."

A study of the tables will furnish problems, and will give a more definite conception of the engine than can be obtained from a description.

Rules for Conducting Tests of Gas- and Oil-engines. Code of 1901.*

I. Objects of the Tests.—At the outset the specific object of the test should be ascertained, whether it be to determine the fulfilment of a contract guarantee, to ascertain the highest economy obtainable, to find the working economy and the defects as they exist, to ascertain the performance under special conditions, or to determine the effect of changes in the conditions, and the test should be arranged accordingly.

Much depends upon the local conditions as to what preparations should be made for a test, and this must be determined largely by the good sense, tact, judgment, and ingenuity of the expert undertaking it, keeping in mind the main issue, which is to obtain accurate and reliable data. In deciding questions of contract, a clear understanding in regard to the methods of test should be agreed upon beforehand with all parties, unless these are distinctly provided for in the contract.

II. General Condition of the Engine.—Examine the engine and make notes of its general condition and any points of design, construction, or operation which bear on the objects in view. Make a special examination of all the valves by inspecting the seats and bearing surfaces, note their condition, and see if the piston-rings are gas-tight.

If the trial is made to determine the highest efficiency, and the examination shows evidence of leakage, the valves, piston-rings, etc., should be made tight and all parts of the engine put in the best possible working condition before starting on the test.

III. Dimensions, etc.—Take the dimensions of the cylinder or cylinders whether already known or not; this should be done when they are hot and in working order. If they are slightly worn, the average diameter should be determined. Measure also the compression space or clearance volume, which should be done, if practicable, by filling the spaces with water previously measured, the proper correction being made for the temperature. (See Section III, Steam-engine Code.)

---

* Trans. A. S. M. E.

IV. Fuel.—Decide upon the gas or oil to be used, and if the trial is to be made for maximum efficiency, the fuel should be the best of its class that can readily be obtained, or one that shows the highest calorific power. (See Section IV, Steam-engine Code.)

V. Calibration of Instruments Used in the Tests.—All instruments and apparatus should be calibrated and their reliability and accuracy verified by comparison with recognized standards. Apparatus liable to change or to become broken during the tests, such as gages, indicator-springs, and thermometers, should be calibrated both before and after the experiments. The accuracy of all scales should be verified by standard weights. In the case of gas- or water-meters, special attention should be given to their calibration, both before and after the trial, and at the same rate of flow and pressure as exists during the trial.

(*a*) *Gages.*—(See Section V, Steam-engine Code.)

(*b*) *Thermometers.*—(See Section V, Steam-engine Code.)

(*c*) *Indicator-springs.*—The indicator-springs should be calibrated with the indicator in as nearly as possible the same condition as to temperature as exists during the trial. This temperature can usually be estimated in any particular case. A simple way of heating the indicator is to subject it to a steam-pressure just before calibration. Compressed air or compressed carbonic-acid gas are suitable for the actual work of calibration. These gases should be used in preference to steam, so as to bring the conditions as near as possible to those which obtain when the indicators are in actual use. When compressed carbonic-acid gas is used, and trouble arises from the clogging of the escape-valves with ice, the pipe between the valve and gas-tank should be heated. With both air and carbonic acid the pipes leading to the indicator should also be heated if it is found that they are below the required temperature. The springs may be calibrated for this class of engines under a constant pressure if desired, and the most satisfactory method is to cover the whole range of pressure through which the indicator acts: first, by gradually increasing it from the lowest to the highest point, and then gradually reducing it from the highest to the lowest point, in the manner which has heretofore been widely followed by indicator-makers; a mean of the results should be taken. The calibration should be made for at least five points, two of these

being for the pressures corresponding to the maximum and minimum pressures, and three for intermediate points equally distant.

The standard of comparison recommended is the dead-weight testing apparatus, a mercury column or a steam-gage, which has been proved correct by reference to either of these standards.

The correct scale of spring to be used for working out the mean effective pressure of the diagrams is the average based on this calibration, ascertained in the manner pointed out in Section XIV, Steam-engine Code.

(*d*) *Gas-meters.*—A meter used for measuring gas for a gas-engine should be calibrated by referring its readings to the displacement of a gasometer of known volume, by comparing it with a standard gas-meter of known error, or by passing air through the meter from a tank in which air under pressure is stored. If the latter method is adopted, it is necessary to observe the pressure of the air in the tank and its temperature, both at the tank and at the meter, and this should be done at uniform intervals during the progress of the calibration. The amount of air passing through the meter is computed from the volume of the tank and the observed temperatures and pressures.

The volume of the gas thus ascertained should be reduced to the equivalent at a given temperature and atmospheric pressure, corrected for the effect of moisture in the gas, which is ordina ily at the saturation-point or nearly so. We recommend that a standard be adopted for gas-engine work, the same as that used in photometry, namely, the equivalent volume of the gas when saturated with moisture at the normal atmospheric pressure at a temperature of 60° F. In order to reduce the reading of the volume containing moist gas at any other temperature to this standard, multiply by the factor

$$\frac{459.4+60}{459.4+t}\times\frac{b-(29.92-s)}{29.4},$$

in which b is the height of the barometer in inches at 32° F., t the temperature of the gas at the meter in degrees F., and s the vacuum in inches of mercury corresponding to the temperature of t obtained from steam-tables.

For calibrating water-meters refer to Section V, Steam-engine Code.

VI. Duration of Test.—The duration of a test should depend largely upon its character and the objects in view, and in any case the test should be continued until the successive readings of the rates at which oil or gas is consumed—taken at, say, half-hourly intervals—become uniform and thus verify each other. If the object is to determine the working economy, and the period of time during which the engine is usually in motion is some part of twenty-four hours, the duration of the test should be fixed for this number of hours. If the engine is one using coal for generating gas, the test should cover a long enough period to determine with accuracy the coal used in the gas-producer; such a test should be of at least twenty-four hours' duration, and in most cases it should extend over several days.

VII. Starting and Stopping a Test.—In a test for determining the maximum economy of an engine, it should first be run a sufficient time to bring all the conditions to a normal and constant state. Then the regular observations of the test should begin and continue for the allotted time.

If a test is made to determine the performance under working conditions, the test should begin as soon as the regular preparations have been made for starting the engine in practical work, and the measurements should then commence and be continued until the close of the period covered by the day's work.

VIII. Measurement of Fuel.—If the fuel used is coal furnished to a gas-producer, the same methods apply for determining the consumption as are used in steam-boiler tests. (See Vol. XXI, p. 34.)

If the fuel used be gas, the only practical method of measurement is the use of a meter through which the gas is passed. Gas-bags should be placed between the meter and the engine to diminish the variation of pressure, and these should be of a size proportionate to the quantity used. Where a meter is employed to measure the air used by an engine, a receiver with a flexible diaphragm should be placed between the engine and the meter. The temperature and pressure of the gas should be measured, as also the barometric pressure and temperature of the atmosphere, and the

quantity of gas should be determined by reference to the calibration of the meter, taking into account the temperature and pressure of the gas.

If the fuel is oil, this can be drawn from a tank which is filled to the original level at the end of the test and the amount of oil required for so doing being weighed; or, for a small engine, the oil may be drawn from a calibrated vessel such as a vertical pipe.

In an engine using an igniting flame the gas or oil required for it should be included in that of the main supply, but the amount so used should be stated separately if possible.

IX. Measurement of Heat-units Consumed by the Engine.— The number of heat-units used is found by multiplying the number of pounds of coal or oil or the cubic feet of gas consumed by the total heat of combustion of the fuel as determined by a calorimeter test. In determining the total heat of combustion no deduction is made for the latent heat of the water vapor in the products of combustion. There is a difference of opinion on the propriety of using this higher heating value, and for purposes of comparison care must be taken to note whether this or the lower value has been used. The calorimeter recommended for determining the heat of combustion is the Mahler for solid fuels or oil, or the Junker for gases, or some form of calorimeter known to be equally reliable. (See Poole on "The Calorific Power of Fuels.")

It is sometimes desirable, also, to have a complete chemical analysis of the oil or gas. The total heat of combustion may be computed if desired from the results of the analysis, and should agree well with the calorimeter values. (See Section XVII, Boiler-test Code.)

In using the gas calorimeter, which involves the determination of the volume instead of the weight of the gas, it is important that the results should be reduced to the same temperature as that corresponding to the conditions of the engine trial. The formula to be used for making the reduction is that already given in Section V, *d*.

For the purpose of making the calorimeter test, if the fuel used is coal for generating gas in a producer, or oil, samples should be taken at the time of the engine trial and carefully preserved for subsequent determination. If gas is used, it is better to have a

gas-calorimeter on the spot, samples taken, and the calorimeter test made while the trial is going on.

X. Measurement of Jacket-water to Cylinder or Cylinders.—The jacket-water may be measured by passing it through a water-meter, or allowing it to flow from a measuring-tank before entering the jacket, or by collecting it in tanks on its discharge. If measuring-tanks are used, the same system of arrangement is recommended as that employed for feed-water measurements in boiler- and steam-engine tests. (See Section XI, Steam-engine Code.)

XI. Indicated Horse-power.—The directions given for determining the indicated horse-power for steam-engines apply in all respects to internal-combustion engines. (See Section XIII, Steam-engine Code.)

The pipe connections for indicating gas- and oil-engines should be removed as far as possible from the ports and ignition devices and made preferably in the cylinder-head. The pipes should be as short and direct as possible. Avoid the use of long pipes, otherwise explosions of the gas in these connections may occur.

Ordinary indicators suitable for indicating steam-engines are much too lightly constructed for gas- and oil-engines. The pencil mechanism, especially the pencil arm, needs to be very strong to prevent injury by the sudden impact at the instant of explosion; a special gas-engine indicator is required for satisfactory work, with a small piston and a strong spring.

XII. Brake Horse-power.—The determination of the brake horse-power, which is very desirable, is the same for internal combustion as for steam-engines.

XIII. Speed.—The same directions apply to internal-combustion engines as to steam-engines for the determination of speed, and reference is made to Section XVII, Steam-engine Code, for suggestions on this subject.

In an engine which is governed by varying the number of explosions or working cycles, a record should be kept of the number of explosions per minute, or, if the engine is running at nearly maximum load, by counting the number of times the governor causes a miss in the explosions.

One way of mechanically recording the explosions is to attach to the exhaust-pipe a cylinder and piston arranged so that the

pressure caused by the exhaust-gases operates against a light spring and moves a register, which is provided for automatically counting the number.

XIV. Recording the Data.—The time of taking weights and every observation should be recorded and note made of every event however unimportant it may seem to be. The pressures, temperatures, meter-readings, speeds, and other measurements should be observed every twenty or thirty minutes when the conditions are practically uniform, and at more frequent intervals if they are variable. Observations of the gas or oil measurements should be taken with special care at the expiration of each hour, so as to divide the test into hourly periods, and reveal the uniformity or otherwise of the conditions and results as the test goes forward.

All data and observations should be kept on suitably prepared blank sheets or in note-books.

XV. Uniformity of Conditions.—When the object of the test is to determine the maximum economy, all the conditions relating to the operation of the engine should be maintained as constant as possible during the trial.

XVI. Indicator Diagrams and their Analysis. — (*a*) *Sample Diagrams.* Sample diagrams nearest to the mean should be selected from those taken during the trial and appended to the tables of the results. If there are separate compression- or feed-cylinders, the indicator diagrams from these should be taken and the power deducted from that of the main cylinder.

XVII. Standards of Economy and Efficiency. — The hourly consumption of heat, determined as pointed out in Article IX, divided by the indicated or the brake horse-power, is the standard expression of engine economy recommended.

In making comparisons between the standard for internal-combustion engines and that for steam-engines it must be borne in mind that the former relates to energy concerned in the *generation* of the force employed, whereas in the steam-engine it does not relate to the entire energy expended during the process of combustion in the steam-boiler. The steam-engine standard does not cover the losses due to combustion, while the internal-combustion engine standard, in cases where crude fuel, such as oil, is burned

in the cylinder, does cover these losses. To make a direct comparison between the two classes of engines considered as complete plants for the production of power, the losses in generating the working-agent must be taken into account in both cases, and the comparison must be on the basis of the fuel used; and not only this, but on the basis of the same or equivalent fuel used in each case. In such a comparison, where producer-gas is used and the producer is included in the plant, the fuel consumption, which will be the weight of coal in both cases, may be directly compared.

The thermal efficiency ratio per indicated horse-power or per brake horse-power for internal-combustion engines is obtained in the same manner as for steam-engines, referred to in Section XXI, Steam-engine Code, and is expressed by the fraction

$$\frac{2545}{\text{B.T.U. per H.P. per hour}}.$$

XVIII. Heat-balance. — For purposes of scientific research a heat-balance should be drawn which shows the manner in which the total heat of combustion is expended in the various processes concerned in the working of the engine. It may be divided into three parts: First, the heat which is converted into the indicated or brake work; second, the heat rejected in the cooling-water of the jackets; and third, the heat rejected in the exhaust-gases, together with that lost through incomplete combustion and radiation.

To determine the first item, the number of foot-pounds of work performed by, say, one pound or one cubic foot of the fuel is determined; and this quantity divided by 778, which is the mechanical equivalent of one British thermal unit, gives the number of heat-units desired. The second item is determined by measuring the amount of cooling-water passed through the jackets, equivalent to one pound or one cubic foot of fuel consumed, and calculating the amount of heat rejected, by multiplying this quantity by the difference in the sensible heat of the water leaving the jacket and that entering. The third item is obtained by the method of differences; that is, by subtracting the sum of the first two items from the total heat supplied. The third item can be subdivided by computing the heat rejected in the exhaust-gases as

a separate quantity. The data for this computation are found by analyzing the fuel- and the exhaust-gases, or by measuring the quantity of air admitted to the cylinder in addition to that of the gas or oil.

XIX. Report of Tests.—The data and results of a test should be reported in the manner outlined in one of the following tables, the first of which gives a complete summary when all the data are determined, and the second is a shorter form of report in which some of the minor items are omitted. (The complete form only is given, pp. 510–513.)

XX. Temperatures Computed at Various Points of the Indicator Diagram.—The computation of temperatures corresponding to various points in the indicator diagram is, at best, approximate. It is possible only where the temperature of one point is known or assumed, or where the amount of air entering the cylinder along with the charge of gas or oil, and the temperature of the exhaust-gases, is determined.

If the amount of air is determined for a gas-engine, together with the necessary temperatures, so that the volume and temperature of the air entering the cylinder per stroke, and that of the gas, are known, we may, by combining this with other data, compute the temperature for a point in the compression-curve. In this computation we must allow for the volume of the exhaust-gases remaining in the cylinder at the end of the stroke. The temperature at the point in the compression-curve where it meets or crosses the atmospheric line will be given by the formula

$$T = \frac{491.4\ V'}{V'' + V''' + V''''} - 459.4, \quad . \quad . \quad . \quad . \quad . \quad (A)$$

where V' is the total volume corresponding to the point where the compression-curve meets or crosses the atmospheric line; V'' the volume of the air at atmospheric pressure entering the cylinder during each working cycle, reduced to the equivalent volume at 32 degrees Fahr.; V''' the volume of the gas consumed per cycle reduced to the equivalent at atmospheric pressure and 32 degrees Fahr.; and V'''' the volume of the exhaust-gases retained in the cylinder reduced to the same basis. To reduce the actual volumes to those at 32 degrees Fahr. multiply by the ratios of

$491.4 \div (T' + 459.4)$, where T' is the observed temperature of the air and of the gas used as fuel. For the exhaust-gases retained in the cylinder at the end of the stroke T' may be taken as the temperature of the exhaust-gases leaving the engine, provided the engine is not of the scavenging type.

Having determined the temperature of a point in the compression-curve, the temperature of any point in the diagram may be found by the equation

$$T_1 = (T + 459.4)\frac{P_1 V_1}{PV} - 459.4. \quad . \quad . \quad . \quad . \quad (B)$$

Here T_1 is the desired temperature of any point in the diagram where the absolute pressure is P_1 and the total volume V_1; and P and V are the corresponding quantities for the point in the compression-line having the temperature T computed from the formula (A).

Formula (B) holds only where the weight of the gases contained in the cylinder is constant. It is also assumed in this formula that the density of the gas compared to air at the same temperature and pressure is the same before and after explosion.

A second method may be employed, provided the air which enters the cylinder is measured. This will allow for any difference in the density of the gas before and after explosion, and more exact values for temperatures on the expansion-curve may be obtained than by the first method.

In this method the density of the exhaust-gases compared to air at the same temperature and pressure is computed, assuming perfect combustion, and including the effect of the water vapor present, and from this density the volume of the gases exhausted per cycle is determined. If the volume exhausted per cycle, added to the volume of the gas retained in the clearance-space at the end of the stroke, be called V in equation (B) and T be the observed temperature of the exhaust-gases, this equation may be used for determining the temperature of any point in the diagram in the way already described. This method is more complicated than the first, as it involves the determination of the theoretical density after explosion, but it possesses the advantage that it may be applied to an oil- as well as to a gas-engine.

A third method of computing the temperature of various points in the diagram may be employed where analyses of the exhaust-gases as well as of the fuel have to be made. This method is more complicated than the first, but, in common with the second, it possesses the advantage that it may be applied to an oil- as well as to a gas-engine.

In applying the third method the volume of the exhaust-gases discharged per working cycle would be given by the formula

$$V_2 = \frac{1}{D}(Rw + w), \quad \ldots\ldots \quad (C)$$

where D is the density of the exhaust-gases at their observed temperature, computed from the analysis, assuming the vapor of water produced through burning the hydrogen in the fuel to be in a gaseous state, R the weight of the air which enters the cylinder per pound of fuel, and w the weight of the fuel consumed per working cycle. The value of R, providing there are no unconsumed hydrocarbons, may be computed by employing the formula

$$R = \frac{NC}{.33(CO_2 + CO)}, \quad \ldots\ldots \quad (D)$$

where N, CO_2, and CO represent the proportions, by volume, of the several constituents of the exhaust-gases, and C the weight of carbon consumed and converted into CO_2 or CO per pound of fuel burned, computed from the analysis of the fuel and of the exhaust-gases.

Having determined the volume V_2 of the exhaust-gases, formula (B) may be used in computing the temperature, in which case T will represent the temperature of the exhaust-gases as in the second method, P the pressure of the exhaust, and V the volume of the exhaust-gases V_2 discharged per stroke, added to the volume of the gases retained in the cylinder at the end of the stroke.

The value of R given in equation (D) is approximate, on account of the fact that the percentage of N should be that due to the air alone, and not that due to the air in addition to that contained in the fuel gas. Where extreme accuracy is desired, the value found for R may be used to determine the percentage of N which in the analysis of the exhaust-gases is due to the N in the fuel gas, and this value may be subtracted from the total N shown

by the analysis of the fuel gases in order to obtain the correct value of N to be used in equation (D).

DATA AND RESULTS OF TEST OF GAS- OR OIL-ENGINE.

ARRANGED ACCORDING TO THE COMPLETE FORM ADVISED BY THE ENGINE TEST COMMITTEE, AMERICAN SOCIETY OF MECHANICAL ENGINEERS, CODE OF 1902.

1. Made by.....of.....
   on engine located at.....
   to determine.....
2. Date of trial.....
3. Type of engine, whether oil or gas.....
4. Class of engine (mill, marine, motor for vehicle, pumping, or other) ....
5. Number of revolutions for one cycle, and class of cycle.....
6. Method of ignition.....
7. Name of builders.....
8. Gas or oil used.....
   (*a*) Specific gravity.....deg. Fahr.
   (*b*) Burning-point..... " "
   (*c*) Flashing-point..... " "
9. Dimensions of engine:

	1st Cyl.	2d Cyl.
(*a*) Class of cylinder (working or for compressing the charge).....		
(Vertical or horizontal).....		
(*c*) Single- or double-acting.....		
(*d*) Cylinder dimensions.....		
Bore.....in.		
Stroke.....ft.		
Diameter of piston-rod .....in.		
Diameter of tail-rod ..... "		
(*e*) Compression space or clearance in per cent of volume displaced by piston per stroke:		
Head end.....		
Crank end.....		
Average.....		
(*f*) Surface in square feet (average).....		
Barrel of cylinders.....		
Cylinder-heads.....		
Clearance and ports.....		
Ends of piston.....		
Piston-rod.....		
(*g*) Jacket surfaces or internal surfaces of cylinder heated by jackets, in square feet.....		
Barrel of cylinder.....		
Cylinder-heads.....		
Clearance and ports.....		
(*h*) Horse-power constant for one lb. M.E.P., and one revolution per minute.....		

10. Give description of main features of engine and plant, and illustrate with drawings of same given on an appended sheet. Describe the method of governing. State whether the conditions were constant during the test.

TOTAL QUANTITIES.

11. Duration of test.....hours
12. Gas or oil consumed.....cu. ft. or lbs.
13. Air supplied in cubic feet.....cu. ft.
14. Cooling-water supplied to jackets..... "
15. Calorific value of gas or oil by calorimeter test, determined by.....calorimeter.....B.T.U.

HOURLY QUANTITIES.

16. Gas or oil consumed per hour.....cu. ft. or lbs.
17. Cooling-water supplied per hour.....lbs.

PRESSURES AND TEMPERATURES.

18. Pressure at meter (for gas-engine) in inches of water.....ins.
19. Barometric pressure of atmosphere:
    (*a*) Reading of height of barometer.....ins.
    (*b*) Reading of temperature of barometer.....deg. Fahr.
    (*c*) Reading of barometer corrected to 32° F.....ins.
20. Temperature of cooling-water:
    (*a*) Inlet.....deg. Fahr.
    (*b*) Outlet..... " "
21. Temperature of gas at meter (for gas-engine)..... " "
22. Temperature of atmosphere:
    (*a*) Dry-bulb thermometer..... " "
    (*b*) Wet-bulb thermometer..... " "
    (*c*) Degree of humidity.....per cent.
23. Temperature of exhaust-gases.....deg. Fahr.
    How determined.....

DATA RELATING TO HEAT MEASUREMENT.

24. Heat-units consumed per hour (lbs. of oil or cu. ft. of gas per hour multiplied by the total heat of combustion)....B.T.U.
25. Heat rejected in cooling-water:
    (*a*) Total per hour..... "
    (*b*) In per cent of heat of combustion of the gas or oil consumed.....per cent
26. Sensible heat rejected in exhaust-gases above temperature of inlet air:
    (*a*) Total per hour.....B.T.U.
    (*b*) In per cent of heat of combustion of the gas or oil consumed.....per cent.
27. Heat lost through incomplete combustion and radiation per hour:
    (*a*) Total per hour.....B.T.U.
    (*b*) In per cent of heat of combustion of the gas or oil consumed.....per cent.

SPEED, ETC.

28. Revolutions per minute .....rev.
29. Average number of explosions per minute.....
    How determined.....
30. Variation of speed between no load and full load.....rev.
31. Fluctuation of speed on changing from no load to full load, measured by the increase in the revolutions due to the change.....

INDICATOR-DIAGRAMS.

32. Pressure in lbs. per sq. in. above atmosphere:

	1st Cyl.	2d Cyl.
(*a*) Maximum pressure.....		
(*b*) Pressure just before ignition.....		
(*c*) Pressure at end of expansion.....		
(*d*) Exhaust pressure.....		

33. Temperature in deg. Fahr. computed from diagram:
    (*a*) Maximum temperature (not necessarily at maximum pressure)....
    (*b*) Just before igniton.....
    (*c*) At end of expansion.....
    (*d*) During exhaust.....
34. Mean effective pressure in lbs. per sq. in.....

POWER.

35. Power as rated by builders:
    (*a*) Indicated horse-power ..... H.P.
    (*b*) Brake..... "
36. Indicated horse-power actually developed:
    First cylinder..... H.P.
    Second cylinder ..... "
    Total..... "
37. Brake H. P., electric H.P., or pump H.P. according to the class of engine..... "
38. Friction indicated H.P. from diagrams, with no load on engine and computed for average load..... "
39. Percentage of indicated H.P. lost in friction .....per cent

STANDARD EFFICIENCY RESULTS.

40. Heat-units consumed by the engine per hour:
    (*a*) Per indicated horse-power.....B.T.U.
    (*b*) Per brake horse-power..... "
41. Heat-units consumed by the engine per minute:
    (*a*) Per indicated horse-power..... "
    (*b*) Per brake horse-power..... "
42. Thermal efficiency ratio:
    (*a*) Per indicated horse-power.....per cent
    (*b*) Per brake horse-power..... " "

MISCELLANEOUS EFFICIENCY RESULTS.

43. Cubic feet of gas or lbs. of oil consumed per H.P. per hour:
    (*a*) Per indicated horse-power.....
    (*b*) Per brake horse-power.....

HEAT BALANCE.

44. Quantities given in per cents of the total heat of combustion of the fuel:

(*a*) Heat equivalent of the indicated horse-power.....per cent
(*b*) Heat rejected in cooling-water..... " "
(*c*) Heat rejected in exhaust-gases and lost through radiation and incomplete combustion..... " "
Sum = 100 " "

Subdivision of Item (*c*):

(*c*1) Heat rejected in exhaust-gases.....
(*c*2) Lost through incomplete combustion.....
(*c*3) Lost through radiation, and unaccounted for.....
Sum = Item (*c*).

ADDITIONAL DATA.

Add any additional data bearing on the particular objects of the test or relating to the special class of service for which the engine is to be used. Also give copies of the indicator-diagrams nearest the mean and the corresponding scales. Where analyses are made of the gas or oil used as fuel, or of the exhaust-gases, the results may be given in a separate table.

CHAPTER XVII.

BOILING IN A VACUUM.

Multiple Effects, Vacuum-pans, and Fresh-water Distillers.—Many substances can only be evaporated properly at temperatures below 212° F., as, for instance, sugar solutions, milk, and many substances used in chemical preparations. The pressure at which these substances are boiled must be reduced below atmospheric pressure by condensing their vapors and removing air or non-condensible gases by means of an air-pump, as in the case of condensing-engines.

Omitting radiation losses from consideration, all the heat applied to the liquid that is being boiled is contained in the vapor that is sent to the condenser. If this heat is wasted, the economy of the operation is very low. This method is called boiling in a single effect. It is the method employed in boiling in the vacuum-pans of cane- and beet-sugar houses.

The steam arising from the boiling liquid in an effect can be used to evaporate more of the same liquid in a second effect if the temperature of boiling in the second one is thirty or more degrees lower than that in the first one. This necessary difference of temperature—to make the heat flow—is obtained by making the pressure in the second effect lower than that in the first. The amount of this pressure is easily obtained from a table of boiling-points and the corresponding pressures of the substance boiled.

In a similar manner the vapor arising from the second effect may be used to evaporate a further quantity from the given liquid in a third effect in which the temperature and absolute pressure is less than in the second effect.

At first sight it would seem that this process could be carried on indefinitely. It has its limits, however. The vapor from the

last effect must be condensed and its temperature must be thirty or more degrees above the temperature of the discharge-water of the condenser. Hence the lowest pressure or the pressure in the last effect is that maintained in the condenser. The upper limit is determined by other conditions. Having the upper and lower limits or total range of temperature and an assumed range in each effect, the number of effects is easily found by dividing the total range by the range of temperature in each effect.

In cane- and beet-sugar houses, the exhaust-steam from the main and auxiliary engines is the source of supply of steam to

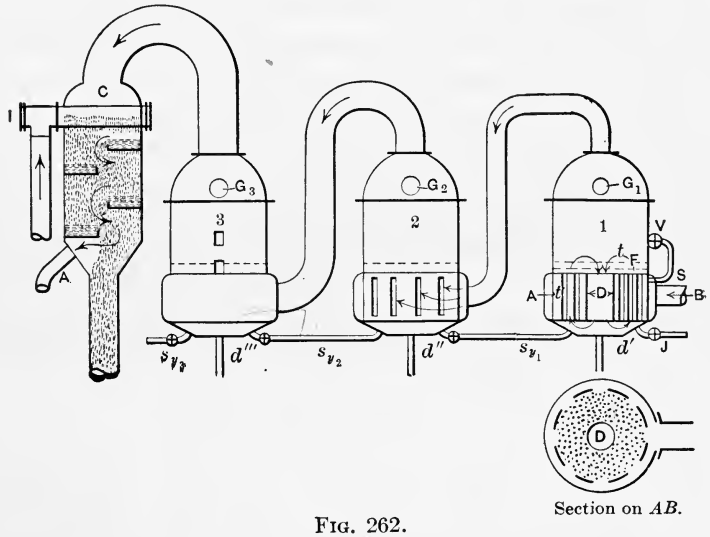

FIG. 262.

the first effect. As a rule, its pressure is from 7 to 10 pounds above the atmosphere, hence its temperature is from 230° F. to 240° F. If a vacuum of 27 inches is maintained in the last effect—corresponding temperature is 115° F.—there is a difference of $240-115=125°$ F. If a triple effect is used there will be a difference of some 40° between the two sides of the heating-surface in each effect.

In Fig. 262 the first, second, and third effects are marked 1, 2, 3, respectively; the steam-pipe bringing steam to the first effect is marked *S*; the vapor arising from the first effect is brought

down and delivered to the second effect at a point corresponding to that in No. 1; the vapor-pipes of the second and third effects differ in diameter, as the volume of the vapor delivered increases greatly as the pressure is decreased. The vapor from the third effect is condensed by coming into contact with the injection-water flowing through the pipe *I*. The air is drawn off through the pipe *A*, protected by a shelf, by the dry-air pump. The discharge-water flows away by gravity.

Examining No. 1 more in detail we find that it is made of four belts called the dome, the calander, the tube-belt, and the bottom. The effect is supported by the tube-belt in order that the bottom may be readily dropped for repairs.

In none of the effects is the steam admitted directly among the tubes. The steam passes around the effect in an annular belt and is admitted to the tube-space through narrow slots, shown much enlarged in the No. 2 effect. This distributes the steam and prevents the foaming that would otherwise occur near the steam-pipe opening. The circulation of the juice is up through the small tubes—2 inches in diameter and 30 to 40 inches long—and down through the downcomer—24 inches or more in diameter—marked *D*.

The action then is as follows: Steam, pressure 25 pounds absolute, temperature 240° F., enters the steam-space of No. 1 effect. The temperature of the juice on the other side is 40 degrees lower, or 200° F.; therefore the gage G_1 should show 7 inches mercury vacuum = 11 pounds absolute. The steam at 200° F. passes into the steam-belt of No. 2. The juice on the other side of its tubes must be at 200° − 40° = 160° F. Hence gage G_2 should show 20 inches of mercury vacuum. The steam at 160° passes into No. 3, and the gage G_3 should show 26.5 inches of mercury vacuum. It is the custom to show the vacuum in the effects rather than the absolute pressure. The efficiency of the heating-surfaces would be greatly increased by increasing the vacuum to 28 inches.

As the condensed steam in No. 1 belt is at a pressure higher than that of the atmosphere it is easily drained off. As the pressure in the other two belts is less than that of the atmosphere an air-pump, called a sweet-water pump, is necessary to draw off

the condensed steam and produce the necessary vacuum that exists over the juice surface in Nos. 1 and 2; that in No. 3 is produced by the air-pump connected to the condenser at *A*. If the multiple effect is more than 34 feet from the ground the condensed steam in the tube-belts of the second and third effects will drain off automatically through drip-pipes terminating in barrels of water on the ground. It is wise to connect by a half-inch pipe the steam-space to the vapor-space over the top tube-sheet in each effect, as shown in No. 1 at *V*. This permits the easy withdrawal of air and (in beet-sugar factories) ammonia that accumulate in the upper part of the steam-space and interfere with the efficiency of the tubes.

The raw, clarified juice enters No. 1 at *J* and the syrup of proper density—28°–30° Beaumé—is drawn off by a pump at Sy_3, a uniform level being kept in all three effects by regulating valves Sy_3 and *J*. The juice therefore passes through the three effects, becoming denser as it loses water that has been evaporated.

Theory of the Multiple Effect.

Let t_0 = temperature of the juice entering the apparatus;
T_1 = temperature of the boiling juice;
T_2 = temperature of the steam for heating this juice;
C = rate of transmission in thermal units per unit area per degree difference of temperature between the steam and juice side, = 22 calories per square meter per 1° Cent., diff. = 4.5 B.T.U. per square foot per 1° Fahr. diff. of temperature between the two sides per minute;
A = area of the heating-surface;
Q = amount of heat transmitted per minute = $AC(T_2 - T_1)$;
λ_1 = total heat of steam, above 32° F., at T_1 = $1091.7 + .305(T_1 - 32)$;
L_2 = latent heat of steam given off in condensing = $1091.7 + .305(T_2 - 32) - (T_2 - 32)$;
S_c = weight of steam condensed in the intertubular space;
W_v = weight of water evaporated from the juice.

If the substance evaporated from any liquid is any other than water, the proper changes must be made in the specific heat and heat of vaporization. Then the fundamental equations are:

$$Q = S_c L_2, \quad \therefore \ S_c = \frac{Q}{L_2}.$$

$$Q = W_v[\lambda_1 - (t_0 - 32)], \quad \therefore \ W_v = \frac{Q}{\lambda_1 - (t_0 - 32)}.$$

$$Q = AC(T_2 - T_1).$$

Taking the normal back pressure of the exhaust-steam from all engines at 10 pounds, gage, the corresponding temperature is 240° F. Assume that the temperature of the thin beet-juice from the filters or the thin cane-juice from the clarifiers at 170° F. This, of course, varies, but a few degrees either more or less will not be important. Assume that the highest vacuum is 26.5 inches of mercury, so that the temperature of the thick juice is 120° F. The difference of temperature between the highest steam and the coolest juice is 240° − 120° = 120° F.

With the above data we shall derive the theoretical equations for single, double, and triple effects. It will then be seen that the capacity of a double or triple effect is no greater than that of a single effect working between the same range of temperature—120° in this case—but that the economy of a double effect is twice, and that of a triple effect is three times, that of a single effect (theoretically). In practice the economy of the double effect is one and a half, and that of a triple effect twice that of a single effect.

The theory given applies to the distillation of fresh water by multiple effects. By the use of live steam instead of exhaust steam the number of effects (and hence the economy of operation) may be increased due to the increased total range of temperature.

SINGLE EFFECT.

$t° = 170°$ F.;
$T_1 = 120°$ F.—juice entering the effect is hotter than boiling juice inside;
$T_2 = 240°$ F.;
$T_2 - T_1 = 240° - 120° = 120°$ F.;
$C = 4.5$ B.T.U. per minute;

A = one square foot, therefore $Q = 1 \times 4.5 \times 120 = 540$ B.T.U. per square foot;

$S_c = \frac{Q}{L_2}$ = steam condensed per square foot of heating-surface

$$= \frac{540}{1091.7 + .305(240 - 32) - (240 - 32)} = .57 \text{ pound};$$

W_v = water evaporated per square foot of heating-surface

$$= \frac{540}{1091.7 + .305(120 - 32) - (170 - 32)} = .55 \text{ pound}.$$

Therefore a single effect will evaporate, under these conditions, .55 pound of water per minute per square foot of heating-surface and will require .57 pound of steam, or, in other words, one pound of steam in condensing evaporates .96 pound of water.

DOUBLE EFFECT.

In a double effect the range of temperature in each effect will be one-half that in a single effect, or with our data $\frac{120°}{2} = 60°$.

First Effect.

$T_2' = 240°$ F. as before;

$T_1' = T_2 - \frac{120°}{2} = 240° - 60° = 180°$ F. = temperature of boiling juice in the first effect;

$t_0 = 170°$ F. temperature of juice entering the first effect;

$Q = A'C(T_2' - T_1') = 1 \times 4.5 \times 60 = 270$ B.T.U.;

$\lambda_1 - (t_0 - 32) = 1091.7 + .305(180 - 32) - (170 - 32) = 998$ B.T.U.;

$L_2' = 1091.7 + .305(240 - 32) - (240 - 32) = 946$ B.T.U.;

$$S_c' = \frac{Q}{L_2} = \frac{270}{946} = .285 \text{ pound};$$

$$W_v' = \frac{Q}{\lambda_1 - (t_0 - 32)} = \frac{270}{998} = .272 \text{ pound}.$$

Second Effect.

The steam entering the second effect will have the temperature of the boiling juice in the first effect, and as the juice is run from the first to the second effect the temperature of the juice entering

the second effect will be the same as that of the boiling juice in the first effect.

S_c'' = steam condensed in the second effect;
W_v'' = water evaporated in the second effect;
T_2'' = 180° F. = temperature of steam entering second effect;
t_0' = 180° F. = temperature of juice entering second effect;
T_1'' = 120° F. = temperature of boiling juice in the second effect;
$L_2'' = 1091.7 + .305(180 - 32) - (180 - 32) = 988$ B.T.U.;
$\lambda_1'' - (t_0 - 32) = 1091.7 + .305(120 - 32) - (180 - 32) = 970$ B.T.U.

In the first effect we assumed one square foot of heating surface. We cannot assume one square foot of heating-surface in the second effect, for we must have such an area in the second effect as will transmit (under the assumed conditions) the heat that is sent from the first effect.

The heat that is transmitted through the heating-surface of the second effect is $S_c''L_2''$. But $S_c'' = W_v'$, the water evaporated from the first effect. Therefore

$$Q = .272 \times 988 = 268.7 \text{ B.T.U.} = A'' \times 4.5(180 - 120);$$
$$A = .99 \text{ square foot};$$
$$W_v'' = \frac{268.7}{970} = .277.$$

In the two effects we have 1.99 square feet of heating-surface required for the evaporation of .272 + .277 = .55 pound of water, or the evaporation for two square feet in the double effect is the same as that for one square foot in the single effect. But the amount of steam condensed from the source of supply is only .285, or one-half that required from the outside by the single effect.

TRIPLE EFFECT.

In the triple effect between the same temperature limits—240° to 120°—the range in each effect is 40° F. The area of heating-surface in the second and third effects must be found as it was found in the case of the second effect of the double effect. In general it will be found theoretically that three square feet are required to do the work of one square foot in the single effect,

CONCENTRATION OF CANE-JUICE.

PERCENTAGE OF VOLUME TO BE EVAPORATED BETWEEN GIVEN DENSITIES.

APPROXIMATION TO NEAREST ONE PER CENT.

Density of Concentrated Juice in Degrees Beaumé.

Density of Thin Juice in Degrees Beaumé.	8°	10°	12°	14°	16°	18°	20°	22°	24°	26°	28°	30°	32°	34°	36°	38°	40°	42°	44°	46°	48°	50°
6°	26	41	52	60	65	70	73	76	79	80	82	84	85	86	87	88	89	90	91	91	91	92
7	12	32	44	53	59	65	69	72	75	77	78	81	82	84	85	86	87	88	89	90	91	91
8		21	35	45	53	59	64	68	71	74	76	78	80	82	83	85	86	87	88	89	90	90
9		10	26	38	46	53	59	63	67	70	72	74	77	79	80	81	83	84	85	86	87	88
10			17	30	40	47	52	58	63	66	69	71	73	76	78	80	81	82	83	85	85	87
12				15	27	36	43	50	55	59	62	66	69	71	73	76	78	79	81	82	83	84
14					13	25	33	41	47	51	56	60	62	66	69	71	73	75	77	78	80	82
16						12	23	31	39	45	49	53	57	60	64	67	69	71	73	75	77	78
18							11	20	29	35	41	47	50	54	58	61	63	66	68	70	73	75
20								10	20	26	33	40	44	49	53	57	60	62	65	67	70	72
22									10	18	26	33	38	43	48	52	55	58	61	63	66	68
24										9	17	25	30	37	41	46	50	54	57	60	62	65
26											8	16	23	30	35	40	44	49	52	55	59	61
28												8	15	22	28	34	39	43	48	51	55	57
30													8	15	21	26	32	38	42	46	50	53
32														7	14	21	26	32	38	42	46	49

but there will only be required one-third the quantity of steam from the source of supply.

Actual Design of Multiple Effects.—The actual design of economical multiple effects is considerably more complicated than would be indicated by the preceding theory. As a matter of fact the coefficient of heat transfer is not the same in each of the effects. This is easily seen from Professor Perry's theory. In the last effect the molecules of steam are far apart, their rate of vibration is low, they have far less power of brushing away the water on the heating surface than in the first effect. As a result of numerous experiments Claassen gives the following values for C, the calories per square meter per degree Cent., difference of temperature between the heating and boiling fluids per minute; for the first body, 40; for the second body, 30; for the third body, 20; and for the fourth body, 10, when the surfaces are clean.

While it is possible to attain the rates indicated above when the surfaces are clean it is not possible when the surfaces become foul. It is better then to assume the following rates for C. For the first body, 32; for the second body, 25; for the third body, 17; for the fourth body, 9. Instead of having equal fall of temperature in each effect, it is better to make the product of the fall of temperature in any effect and the heat transfer coefficient in that effect a constant. Thus, if the fall in temperature in the first effect is 10° and 32 is the coefficient in that effect then the fall in the last effect should be 35.5°, viz., the product $10 \times 32 =$ constant.

The specific heat of the boiling liquid is not constant in the different effects and it should therefore be considered. Further, a very considerable economy arises if steam coming from the different effects is diverted from entering the following effect and is used to raise the temperature of the raw juice gradually to the temperature needed in the clarifiers. The heat coming from the condensed steam in each effect may also be so utilized. If steam is diverted, however, from its regular course a change must be made in the heating surface of the effects for it is essential that each effect should only be able to condense the steam from the preceding effect.

For example, the juice from the mill at 20° C. might be raised by steam passing into the condenser from 20° to 48° C. By vapor from the second effect it might be heated to 88° C. It could be heated from 88° to 94° by vapor from the first effect. In case the raw juice is sent through the filters and cooled it may be heated a second time to 94° C. As a result of this method the heating surfaces in a quadruple effect for a house grinding 1000 tons of cane per day would be:

453 square meters for the first effect; 325 for the second; 264 for the third, and 280 for the fourth. This multiple effect would operate on exhaust steam alone and no coal or wood boilers would be necessary. The bagasse would furnish sufficient heat. The solution of this problem is interesting, but too long for this treatise.

Measurements of Density of Liquids.—The density of liquids is taken by means of hydrometers whose indications are called degrees. The hydrometer is generally made of glass. It consists of a graduated stem with two bulbs. When floating in a liquid it is maintained in an upright position by its low center of gravity, due to the presence of shot in the bottom bulb. The upper bulb containing only air gives the necessary buoyancy. The zero reading is at the top of the scale for liquids heavier than water and at the bottom for liquids lighter than water.

With sugar solutions either the Beaumé or the Brix hydrometer may be used. To convert Beaumé (or Baumé) readings into specific-gravity readings see Kent's Handbook, page 165.

To find the amount of water evaporated from a sugar solution when its density is increased from one hydrometer reading to another:

Let G = the specific gravity of liquid driven off;
G_1 = the specific gravity corresponding to the lower reading;
G_2 = the specific gravity corresponding to the higher reading;
V_1 = original volume of liquid;
x = percentage of original volume that is evaporated;
$V_1(1-x)$ = final volume;
GxV_1 = weight of the vapor driven off;
$G_1V_1 = G_2[V_1(1-x)] + GxV_1$.

If the part evaporated is water, $G = 1$;

$$G_2xV_1 - xV_1 = G_2V_1 - G_1V_1;$$

$$x = \frac{G_2 - G_1}{G_2 - 1}.$$

Tabulating the results obtained for the evaporation from one Beaumé reading to a higher one, we obtain the preceding table.

If a mill grinds 500 tons of sugar-cane per day, with an extraction of 80%, what will be the heating-surface required theoretically in a triple effect working between 240° and 120° F., and reducing the juice from 6° to 26° Beaumé?

Weight of juice in pounds,

$$\frac{500 \times 2000 \times 80}{100} = 800{,}000;$$

Volume of juice in cubic feet,

$$\frac{800{,}000}{62.5 \times 1.041} \quad (6° \text{ Bé.} = 1.041 \text{ sp. gr.}).$$

From table, volume of juice evaporated

$$= \frac{800{,}000. \times .80}{62.5 \times 1.041} \text{ cubic feet;}$$

Weight of water evaporated in 24 hours

$$= \frac{800{,}000 \times .80 \times 62.5}{62.5 \times 1.041} = 615{,}000;$$

Weight of water evaporated per minute

$$= \frac{615{,}000}{24 \times 60} = 427 \text{ pounds;}$$

The required heating-surface would be

$$\frac{427}{.19} = 2250 \text{ square feet.}$$

This quantity must be multiplied by a factor of safety to cover (1) the maintenance of a less range of temperature; (2) the direction of the tubes—whether horizontal or vertical; (3) amount of scale on the tubes; (4) the drawing off of air in the intertubular space;

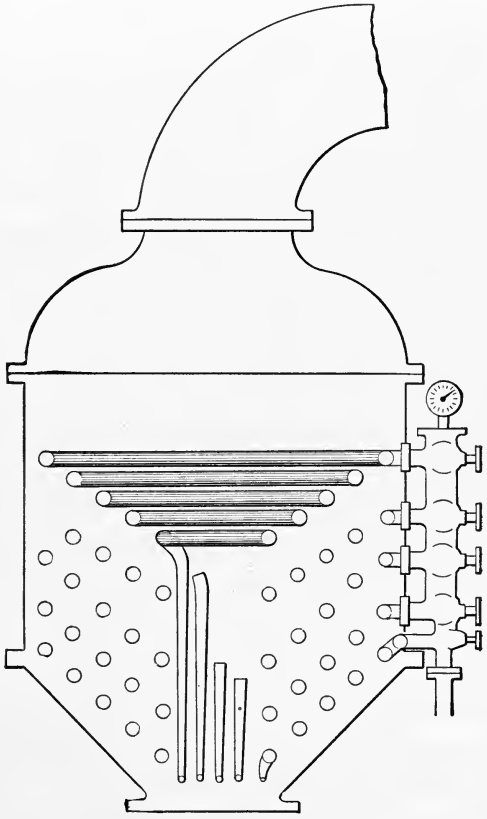

Fig. 263.

(5) improper care, not keeping the pressures in each effect at the proper point; (6) inequality in the daily tonnage of cane.

The factor of safety is sometimes as high as 2.

Fig. 263 represents a diagrammatic sketch of a vacuum-pan, as used in sugar-houses and refineries. In theory it is a single effect, as the steam arising from the sugar solution, boiling under 20 to 26 inches of vacuum, goes immediately to a condenser.

The economy of the process is low—in reality only a small amount of evaporation is performed in the pan. An approximate idea may be obtained from the following terse summary of results. Start with 10 cubic feet of juice as it comes from the sugar-cane, boil it down in the multiple effect to 2 cubic feet by evaporating 8 cubic feet of water away. The resulting liquid has the consistency of table syrup. Evaporate the 2 cubic feet of syrup to 1 cubic foot in the vacuum-pan. The residue is a mixture of 50 to 60% of molasses and 50 to 40% of crystallized sugar. This mass flows slowly, and when cold hardly flows at all. Hence the peculiar construction of the pan. It must be built so that the massecuite will flow out.

The boiling is done by a series of coils, each one with its own steam-valve, drain, and trap. Coils are from 4 to 6 inches in diameter and 40 to 60 feet long. Most of the boiling is done by the lower coils, as the upper ones are used only at the end of the process.

In a pan containing seven rows of coils an expert sugar-maker, who knows the kind of syrup he is getting, will draw in syrup till three or more coils are covered. He will boil it down, shutting off coils that will soon become uncovered, until he has the syrup at the proper density. He will then cause crystallization or "form grain" by a sudden chilling of the mass as he has a saturated hot solution, which when chilled becomes supersaturated and will form grain. To do this he increases the vacuum (thus lowering the boiling-point) or gives a strong feed of cold syrup. The remainder of the process consists in building up the grain.

The transfer of heat per square foot of surface per degree difference of temperature is low—not over 1.4 B.T.U.—because of the density and stiffness of the mass during a large part of the process and also because of the small amount of time that the upper coils are in use.

The principal broad point of interest is the relative length of a coil and its diameter. Only a definite weight of steam can pass the cross-section of any tube, and it is useless and in fact detrimental to have more surface than is required to transfer the heat to the liquid that is being boiled. To be efficient the tubes must be kept clear of water. The circulation of the boiling mass is of great importance, and the width of the central channel is at least

one-quarter the diameter of the pan. Vibration stresses are high, and the tubes must be strongly secured to prevent rubbing. A pinhole in a tube necessitates shutting it off.

Problem.—What should be the maximum length of a 6-inch tube using steam at 80 pounds gage; vacuum 22 inches; rate of heat transfer 2.1 B.T.U.?

CHAPTER XVIII.

REFRIGERATION.

Refrigerating Machinery.—When a gas is compressed, heat equal to the work done on it is added to the gas and its temperature rises high above the normal. If this compression is performed in a tubular vessel, the gas may be cooled by passing water at ORDINARY temperature through the tubes. The third step is to allow the gas to expand, either freely or doing work. As a result of this expansion the temperature of the gas may be lowered far below 32° Fahr. If the heat had not been abstracted by the water, as shown above, the final temperature of the expanded gas would have been the original temperature. Having the cold gas, there are many obvious ways of using it (fourth stage) in cooling a room or freezing water in cans. The third and fourth stages may be combined in practice.

The refrigeration cycle has, then, four stages and is the inverse of the heat cycle, and the theoretical heat equations apply equally well to both cycles. There are many systems of refrigeration. The absorption system is more economical than the compression system, but the latter is the more practical and is used more extensively. The use of a compressor may be avoided by absorbing the ammonia in water and then driving it off under high pressure by heat. We shall give short descriptions of a Compressed Air System as used on board ships and of the Ammonia Compression System as commonly found ashore.

First Stage.—From formulas, page 118, we find if w pounds of dry air are compressed from P_0, V_0, T_0 to P_1, V_1, T_1, and are expelled at P_1, with a constant pressure, P_0, on the other side of the piston.

$A_1 = \frac{\gamma}{\gamma - 1}(P_1V_1 - P_0V_0) =$ net work in foot-pounds required per stroke,

$$w\gamma K_v(T_1 - T_0) \text{ foot-pounds, or } wK_p(T_1 - T_0).$$

The final temperature of compression is

$$T_1 = T_0\left(\frac{P_1}{P_0}\right)^{\frac{r-1}{r}},$$

or

$$T_1 = T_0\left(\frac{V_0}{V_1}\right)^{r-1}.$$

Second Stage.—Let the air be cooled at constant pressure ($P_1 = P_2$), its temperature falling to $T_2 (= T_0$ theoretically) and its volume to V_2. The amount of heat abstracted =

$$Q_2 = wK_p(T_1 - T_2) \text{ foot-pounds;}$$

The amount of cooling-water in gallons =

$$G = \frac{Q_2}{778 \times 8.3(t_1 - t_2)};$$

t_1 = temperature of discharge-water from the condenser,
t_2 = " " injection " to " "

Third Stage.—The air is now allowed to expand in an expansion cylinder doing net work =

$$A_2 = wK_p(T_2 - T_3),$$

when T_3 = final temperature of expansion $= T_2\left(\frac{P_3}{P_1}\right)^{\frac{r-1}{r}}$,

$$\text{as } P_1 = P_2.$$

Fourth Stage.—The cold air at T_3 is allowed to absorb the heat equal to C foot-pounds from the substance to be chilled. The amount of heat gained by the air equals the refrigeration effect on the substance to be chilled,

$$C = wK_p(T_4 - T_3),$$

where T_4 = final temperature of the cold air.

Theoretically, to produce a cycle, T_4 should equal T_0.

In other words, the initial temperature of the substance to be chilled the final temperature of the cold air that caused the chill-

ing and the initial temperature of the air entering the compressor $= T_0$.

The power required per stroke $= A_1 - A_2$;

$$Q_2 = A_1 - A_2 + C;$$

The efficiency $E = \dfrac{T_4 - T_3}{(T_1 - T_2) - (T_4 - T_3)}$ or $\dfrac{T_0 - T_3}{(T_1 - T_2) - (T_0 - T_3)}$

Theoretically, $\dfrac{T_3}{T_2} = \dfrac{T_0}{T_1}$.

Ammonia Compression System.—Fig. 264 is a diagrammatic sketch illustrating the fundamental elements of an ammonia compression system. In a reservoir, *R*, is a supply of liquid and gaseous ammonia under a pressure of 150–200 pounds per square inch. By opening a valve, *a*, capable of very fine adjustment—

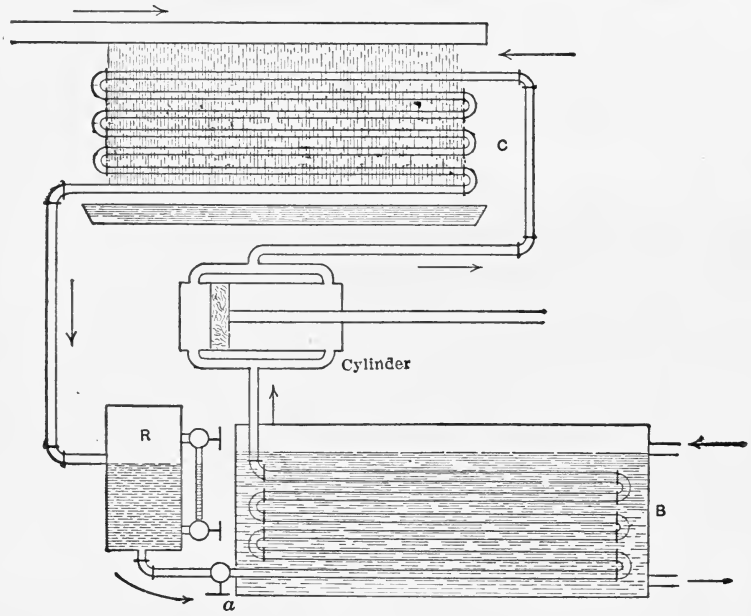

FIG. 264.

generally a needle-valve—the liquid ammonia is admitted into the tubes, *B*, enclosed in brine. The pressure and temperature in these tubes are quite low, some 30 pounds absolute and 0° F., for instance, as they are on the suction side of the compressor cylinder. On the delivery stroke of the piston of this cylinder

the ammonia that had become completely gasefied and finally superheated by its free expansion at the low pressure in the tubes, *B*, is compressed up to a pressure as high or a trifle higher than that in the reservoir. The high superheat arising from this compression is removed by the action of the cooling-water on the tubes of the condenser, *C*, through which the gas flows on its way to the reservoir *R*. Under practically constant pressure the gas gives up first its superheat and then its latent heat, and trickles back into the reservoir as liquid ammonia.

The conversion of the liquid into gaseous ammonia in the tubes, *B*, requires heat. This is supplied by the brine which is thereby cooled to some temperature between 0° and 32° F. The brine is forced through pipes in the room to be chilled or around the cans containing the water—distilled so as to be free of air-bubbles—to be frozen. The brine is used:

1. To prevent sudden changes of temperature in the cooling-room, its effects being similar to those of a fly-wheel on the rotation of an engine.

2. To prevent the damage that would occur with an ammonia leak.

As ammonia disintegrates brass, none of that metal should be exposed to that alkali. All the tubes and fittings should be of extra-strong metal, and all screwed joints must be soldered to insure tightness. For efficient compression the compressor clearance must be very small and preferably filled with heavy oil at the end of the stroke; the valves must be perfectly true, as the slightest wear reduces the economy. The compressor is exposed to heavy pressure and high temperature, hence great strength is necessary. The piston and valve-stems must have very deep packing-boxes, as ammonia leakage is extremely difficult to prevent.

In Fig. 265 let *A* represent the state of the liquid ammonia to the immediate left of the valve, *a*, Fig. 264. The expansion that takes place when the liquid passes through the valve, *a*, is expansion at constant heat (Fig. 122, page 224), consequently *AB* is *not* a straight line. The heat of the vapor and liquid at *B* is the same as the heat of the liquid alone at *A* in excess of that at *g* assumed as an origin. Heat from the brine is absorbed in pro-

ducing the evaporation represented by the line *BC*. In passing through pipes in the air and into the warm compressor the gas is superheated, as shown by *CD*. *DE* represents the rise in temperature due to adiabatic compression in the compressor cylinder. If the mean pressure existing in the condenser-tubes be taken, it will be found that the gas entering the condenser, *C*, from the com-

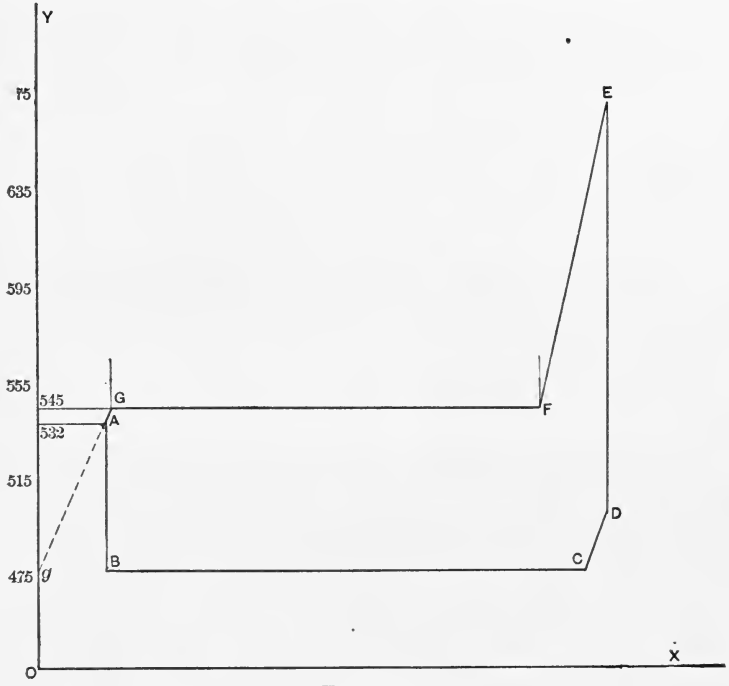

FIG. 265.

pressor has a temperature far in excess of that corresponding to that pressure as shown in Table X of Peabody's tables, or as shown in Kent, page 993. The cooling-water absorbs the superheat and then the latent heat of the ammonia gas, and finally some of the heat of the liquid ammonia, as shown by the lines *EF*, *GF*, and *GA*.

The data for the entropy diagram were taken from Kent, page 998, where other data may be found.

Average high ammonia pressure above atmosphere..... 151 lbs.
Average back ammonia pressure above atmosphere..... 28 "

Pounds ammonia circulated per minute	28.17
Probable temperature of liquid ammonia, entrance to brine-tank	71.3° F.
Temperature of ammonia corresponding to average back pressure	+14° F.
Average temperature of gas leaving brine-tanks	34.2°
Temperature of gas entering compressor	39°
Average temperature of gas leaving compressor	213°
Average temperature of gas entering condenser	200°
Temperature due to condensing pressure	84.5°
Heat given ammonia:	
By brine, B.T.U. per minute	14,776
By compressor, B.T.U. per minute	2,786
By atmosphere, B.T.U. per minute	140
Heat taken from mmaonia:	
By condenser, B.T.U. per minute	17,242
By jackets, B.T.U. per minute	608
By atmosphere, B.T.U. per minute	182

The heat given and received per pound of ammonia may be found by dividing those quantities per minute by 28.17. Assume the specific heat at constant pressure of ammonia vapor = 1.1 and that of the liquid = .52. The minimum entropy is that of liquid ammonia at 14° F. = 475° F. Abs. Let it be the starting-point for entropy measurements. Assume one pound of ammonia passing through the cycle. The heat required to raise the temperature of the liquid to 71.3° F. = 532.3° F. Abs. will be $.52(532-475)$, and dividing by $\frac{532.3+475}{2}$ will give the entropy of A. More accurately the difference of entropies of g and $A = .52 \log_e \frac{532.3}{475}$.

The difference between the heat in the liquid at B and at A is available in evaporating liquid between B and A. The entropy at

$$B = \frac{.52(532-475)}{475}.$$

At C all the liquid has been evaporated. The temperature at D is $39+461 = 500°$ F. Abs. The heat required to superheat from

475 to 500 is $1.1(500-475)$, and hence the increase of entropy from 475 to 500 is readily found.

The compression is assumed to be adiabatic and the point E is laid off. The excess of the entropy of F over that of G is readily found.

The data show variations from this theoretical cycle. The heat areas are given and may be plotted approximately, and compared with those of the theoretical diagram. The area beneath BC or the heat abstracted from the brine is the effective area.

Refrigeration Units.—The unit adopted to measure the cooling effect, or the refrigeration, is the heat required to melt one pound of ice, which is 144 British thermal units. Dividing the refrigeration, measured in British thermal units, by 144, the ice-melting capacity in pounds is obtained. The unit for a ton (2000 lbs.) of ice-melting capacity is therefore 288,000 British thermal units.

The commercial tonnage capacity is the refrigerating effect, expressed in tons of ice-melting capacity, produced by a machine in 24 hours, when running continuously under the standard set of conditions.

Considering the matter from the standpoint of cost of plant and of steam and water economy, the best set of conditions to adopt seems to be those which often exists in ice-making, namely, that the temperature of the saturated vapor at the point of liquefaction in the condenser be 90° F., and the temperature of evaporation of the liquid in the refrigerator be 0° F.

The ice-making capacity is not the ice-melting capacity of a machine, but is less, being usually about one-half the latter, because in making a pound of ice more refrigeration than 144 British thermal units is required, owing to cooling the water to 32° F. and certain unavoidable losses incident to the process.

The commercial tonnage capacity of any refrigerating machine using liquefiable vapor is based upon the actual weight of the refrigerating fluid that is circulated between the condenser and the refrigerator, and that is actually evaporated in the refrigerator. Under the conditions specified above twenty-five pounds of anhydrous ammonia per hour must be evaporated in the refrigerator for one ton of commercial tonnage capacity. For other

refrigerating fluids we do not at present make any recommendations as to the weight of the fluid that must be circulated.

The actual refrigerating capacity (in tons) of a machine may be determined from the quantity and range of temperature of brine, water, or other secondary fluid circulated as a refrigerant. The actual refrigerating capacity under the standard set of conditions should correspond closely to the commercial tonnage capacity.

DATA AND RESULTS OF STEAM-ENGINE TEST.[1]

ARRANGED ACCORDING TO THE COMPLETE FORM ADVISED BY THE ENGINE-TEST COMMITTEE OF THE AMERICAN SOCIETY OF MECHANICAL ENGINEERS. CODE OF 1902.

1. Made by..... of.....
   on engine located at.....
   to determine.....
   .....
2. Date of trial.....
3. Type of engine (simple, compound, or other multiple expansion; condensing or non-condensing).....
4. Class of engine (mill, marine, locomotive, pumping, electric, or other) .....
5. Rated power of engine.....
6. Name of builders.....
7. Number and arrangement of cylinders of engine; how lagged; type of condenser.....
8. Type of valves.....
9. Type of boiler.....
10. Kind and type of auxiliaries (air, circulating, main, and feed-pumps; jackets, heaters, etc.).....

	1st Cyl.	2d Cyl.	3d Cyl.
11. Dimensions of engine.....			
(*a*) Single- or double-acting.....			
(*b*) Cylinder dimensions:			
Bore.....in.			
Stroke.....ft.			
Diameter of piston-rod.....in.			
Diameter of tail-rod.....in.			
(*c*) Clearance in per cent of volume displaced by piston per stroke:			
Head end.....			
Crank end.....			
Average.....			

[1] Quoted from Vol. XXIV, A. S. M. E.

(*d*) Surface in square feet (average):
Barrel of cylinder.....
Cylinder-heads.....
Clearance and ports.....
Ends of piston.....

(*e*) Jacket surfaces or internal surfaces of cylinder heated by jackets, in square feet:
Barrel of cylinder.....
Cylinder-heads.....
Clearance and ports.....
Receiver jackets.....

(*f*) Ratio of volume of each cylinder to volume of high-pressure cylinder.....

(*g*) Horse-power constant for one pound mean effective pressure and one revolution per minute.....

12. Dimensions of boilers:
(*a*) Number.....
(*b*) Total grate surface.....sq. ft.
(*c*) Total water-heating surface (external).....sq. ft.
(*d*) Total steam-heating surface (external).....sq. ft.

13. Dimensions of auxiliaries:
(*a*) Air-pump.....
.....
(*b*) Circulating pump.....
.....
(*c*) Feed-pumps.....
.....
(*d*) Heaters.....
.....

14. Dimensions of condenser.....
.....

15. Size, length, and number of turns in main steam-pipe leading from the boiler to the engine.....
.....

16. Give description of main features of plant and illustrate with drawings to be given on an appended sheet.....

TOTAL QUANTITIES, TIME, ETC.

17. Duration of test.....hours.
18. Length of time engine was in motion with throttle open.....hours.
19. Length of time engine was running at normal speed..... "
20. Water fed to boilers from main source of supply..... lbs.
21. Water fed from auxiliary supplies:
(*a*) .....lbs.
(*b*) ..... "
(*c*) ..... "
22. Total water fed to boiler from all sources.....lbs.
23. Moisture in steam or superheating near throttle. .....per cent or deg.
24. Factor of correction for quality of steam, dry steam being unity.....

25. Total dry steam consumed for all purposes.....lbs.
    (In case of superheated steam-engines determine, if practicable, the temperature of the steam in each cylinder.)
26. Total coal as fired.....lbs.
    (Where an independent superheater is used this includes coal burned in the superheater.)
27. Moisture in coal.....per cent.
28. Total dry coal consumed.....lbs.
29. Ash and refuse..... "
30. Percentage of ash and refuse to dry coal.....per cent.
31. Calorific value of coal by calorimeter test, per pound of dry coal, determined by..... calorimeter.....B.T.U.
32. Cost of coal per ton of 2240 lbs.....$

HOURLY QUANTITIES.

33. Water fed from main source of supply .....lbs.
34. Water fed from auxiliary supplies:
    (*a*) .....lbs.
    (*b*) ..... "
    (*c*) ..... "
35. Total water fed to boilers per hour.....lbs.
36. Total dry steam consumed per hour..... "
37. Loss of steam and water per hour due to drips from mains, steam-pipes, and to leakage of plant.....lbs.
38. Net dry steam consumed per hour by engine and auxiliaries.....lbs.
39. Dry steam consumed per hour:
    (*a*) Main cylinders..... lbs.
    (*b*) Jackets and reheaters..... "
    (*c*) Air-pump..... "
    (*d*) Circulating pump..... "
    (*e*) Feed-water pump..... "
    (*f*) Other auxiliaries..... "
40. Dry coal consumed per hour:
    (*a*) During running period.....lbs.
    (*b*) During banking period ..... "
    (*c*) Total..... "
41. Injection or circulating water supplied condenser per hour.....cu. ft

PRESSURES AND TEMPERATURES (CORRECTED).

42. Steam-pressure at boiler by gage.....lbs. per sq. in.
43. Steam-pipe pressure near throttle by gage..... " "
44. Barometric pressure of atmosphere in inches of mercury.....ins.
45. Pressure in first receiver by gage.....lbs. per sq. in.
46. Pressure in second receiver by gage..... " "
47. Vacuum in condenser:
    (*a*) In inches of mercury.....ins.
    (*b*) Corresponding total pressure.....lbs. per sq. in.
48 Pressure in steam-jacket by gage..... " "
49. Pressure in reheater by gage..... " "
50. Moisture in steam or superheating at boilers.....per cent or deg. Fahr.

51. Superheating of steam at first receiver.....deg. Fahr.
52. Superheating of steam in second receiver..... " "
53. Temperature of main supply of feed-water to boilers..... " "
54. Temperature of auxiliary supplies of feed-water:
    (*a*) .....deg. Fahr.
    (*b*) ..... " "
    (*c*) ..... " "
55. Ideal feed-water temperature corresponding to the pressure of the steam in the exhaust-pipe, allowance being made for heat derived from jacket or reheater drips.....deg. Fahr.
56. Temperature of injection or circulating water entering condenser..... .....deg. Fahr.
57. Temperature of injection or circulating water leaving condenser..... deg. Fahr.
58. Temperature of chimney gases entering economizer.....deg. Fahr.
59. Temperature of chimney gases leaving economizer..... " "
60. Temperature of water entering economizer..... " "
61. Temperature of water leaving economizer..... " "
62. Temperature of air in boiler-room..... " "
63. Temperature of air in engine-room..... " "

DATA RELATING TO HEAT MEASUREMENTS.

64. Heat-units per pound of feed-water, main supply.....B.T.U.
65. Heat-units per pound of feed-water, auxiliary supply..... "
    (*a*) .....B.T.U.
    (*b*) ..... "
    (*c*)..... "
66. Heat-units consumed per hour, main supply.....B.T.U.
67. Heat-units consumed per hour, auxiliary supplies:
    (*a*) .....B.T.U.
    (*b*) ..... "
    (*c*) ..... "
68. Total heat-units consumed per hour for all purposes.....B.T.U.
69. Loss of heat per hour due to leakage of plant, drips, etc..... "
70. Heat-units consumed per hour
    (*a*) By engine alone.....B.T.U.
    (*b*) By auxiliaries..... "
71. Heat-units consumed per hour by the engine alone, reckoned from temperature given in line 55..... B.T.U.

INDICATOR DIAGRAMS.

	1st Cyl.	2d Cyl.	3d Cyl.
72. Commercial cut-off in per cent of stroke.....			
73. Initial pressure in lbs. per sq in. above atmosphere.....			
74. Back pressure at mid-stroke above or below atmosphere in lbs. per sq. in.....			
75. Mean effective pressure in lbs. per sq. in.....			
76. Equivalent mean effective pressure in lbs. per sq. in:			
(*a*) Referred to first cylinder.....			

(*b*) Referred to second cylinder. . . . . .
(*c*) Referred to third cylinder. . . . . .

77. Pressures and percentages used in computing the steam accounted for by the indicator diagrams, measured to points on the expansion and compression curves. . . . . .

Pressure above zero in lbs. per sq. in.:
(*a*) Near cut-off. . . . . .
(*b*) Near release. . . . . .
(*c*) Near beginning of compression. . . . . .

Percentage of stroke at points where pressures are measured:
(*a*) Near cut-off. . . . . .
(*b*) Near release. . . . . .
(*c*) Near beginning of compression. . . . . .

Percentages of stroke at points where pressures are measured:
(*a*) Near cut-off. . . . . .
(*b*) Near release. . . . . .
(*c*) Near beginning of compression. . . . . .

78. Aggregate M E.P. in lbs. per sq. in. referred to each cylinder given in heading. . . . . .
79. Mean back pressure above zero. . . . . lbs. per sq. in.
80. Steam accounted for in lbs. per indicated horse-power per hour:
(*a*) Near cut-off. . . . . .
(*b*) Near release. . . . . .
81. Ratio of expansion. . . . . .
82. Mean effective pressure of ideal diagram. . . . . lbs. per sq. in.
83. Diagram factor. . . . . per cent.

SPEED.

84. Revolutions per minute. . . . . rev.
85. Piston speed per minute. . . . . ft.
86. Variation of speed between no load and full load. . . . . rev.
87. Fluctuation of speed on suddenly changing from full load to no load, measured by the increase in revolutions due to the change. . . . . rev.

POWER.

88. Indicated horse-power developed by main-engine cylinders:
First cylinder. . . . . H.P.
Second cylinder. . . . . "
Third cylinder. . . . . "
Total. . . . . "
89. Brake H.P., electric H.P., pump H.P., or dynamo H.P., according to the class of engine. . . . . H.P.
90. Friction I.H.P. by diagrams, no load on engine, computed for average speed. . . . . H.P.
91. Difference between indicated and brake H.P. . . . . H.P.
92. Percentage of indicated H.P. of main engine lost in friction. . . . . per cent.
93. Power developed by auxiliaries:
(*a*) . . . . . H.P.
(*b*) . . . . . "
(*c*) . . . . . "

STANDARD EFFICIENCY RESULTS.

94. Heat-units consumed by engine and auxiliaries per hour:
    (*a*) Per indicated horse-power. . . . . B.T.U.
    (*b*) Per brake horse-power. . . . . "
95. Equivalent standard coal consumed by engine and auxiliaries per hour, assuming calorific value such that 10,000 B.T.U. are imparted to the boiler per lb.:
    (*a*) Per indicated horse-power. . . . . lbs.
    (*b*) Per brake horse-power. . . . . "
96. Heat-units consumed per minute:
    (*a*) Per indicated horse-power. . . . . B.T.U.
    (*b*) Per brake horse-power. . . . . "
97. Heat-units consumed by engine per hour corresponding to ideal maximum temperature of feed-water given in line 55, British standard:
    (*a*) Per indicated horse-power. . . . . B.T.U.
    (*b*) Per brake horse-power. . . . . "

EFFICIENCY RATIOS.

98. Thermal efficiency ratio:
    (*a*) Per indicated horse-power. . . . . per cent
    (*b*) Per brake horse-power. . . . . "
    (*c*) Ratio of efficiency of engine to that of an ideal engine working with the Rankine cycle. . . . . per cent

MISCELLANEOUS EFFICIENCY RESULTS.

(The horse-power on which the above efficiency results (94 to 103) are based is that of the main engine exclusive of the auxiliaries.)

99. Dry steam consumed per I.H.P. per hour:
    (*a*) Main cylinder including jackets. . . . . lbs.
    (*b*) Auxiliary cylinders, etc. . . . . "
    (*c*) Engine auxiliaries. . . . . "
100. Dry steam consumed per brake H.P. per hour:
    (*a*) Main cylinders, including jackets. . . . . lbs.
    (*b*) Auxiliary cylinders, etc. . . . . "
    (*c*) Engine and auxiliaries. . . . . "
101. Percentage of steam used by main-engine cylinders accounted for by indicator diagrams:

	1st Cyl.	2d Cyl.	3d Cyl.
(*a*) Near cut-off.			
(*b*) Near release.			

102. Dry coal consumed by combined engine and boiler plant per I.H.P. per hour:
    (*a*) During running period. . . . . lbs.
    (*b*) During banking period . . . . . "
    (*c*) Total. . . . . "
103. Dry coal consumed by combined engine and boiler plant per brake H.P. per hour:
    (*a*) During running period. . . . . lbs.
    (*b*) During banking period. . . . . "
    (*c*) Total. . . . . "

104. Water evaporated under actual conditions per lb. of dry coal.....lbs.
105. Equivalent evaporation from and at 212° F. per pound of dry coal .....lbs.
106. Efficiency of boilers based on dry coal.....per cent.
107. Combined efficiency of boiler and engine plant..... "

ADDITIONAL CALCULATIONS RECOMMENDED FOR SPECIAL CLASSES OF STEAM-ENGINES.

WATER-PUMPING ENGINES.

108. Duty per 1,000,000 heat-units imparted to the boiler.....ft.-lbs.
109. Duty per 1000 pounds of dry steam ..... "
110. Duty per 100 pounds of actual coal consumed by plant..... "
111. Number of gallons of water pumped in twenty-four hours.....gals.

LOCOMOTIVES.

112. Dynamometric horse-power.....H.P.
113. "Standard Coal" of 10,000 B.T.U. value consumed, per dynamometric horse-power per hour.....lbs.

ELECTRIC-LIGHT ENGINES AND THOSE DRIVING GENERATORS FOR ELECTRIC RAILWAYS.

114. Current.....amperes
115. Electromotive force.....volts
116. Electrical power generated in watts.....watts
117. Electrical horse-power generated.....H.P.
118. Efficiency of generator.....per cent
119. Heat-units consumed per electrical horse-power per hour.....B.T.U.
120. Dry steam consumed per electrical horse-power per hour.....lbs.
121. Dry coal consumed per electrical horse-power per hour:
    (*a*) During running period.....lbs.
    (*b*) During banking period..... "
    (*c*) Total..... "

Additional Data.—Add any additional data bearing on the particular objects of the test or relating to the special class of service for which the engine is used. Also give copies of indicator diagrams nearest the mean and the corresponding scales.

CHAPTER XIX.

CONSTANTS FOR LOW-SPEED STEAM-ENGINE DESIGN.*

THE purpose of the investigation here described was to derive from reliable data constants to be used in the design of the steam-engine. The work is confined to the general class known as "slow-speed" engines, principally of the Corliss type. Printed forms, enumerating all the most important particulars to be considered, were sent to nearly all the builders of this class of engine, with the request that they insert the data desired. Seventy engines by a dozen different makers, ranging from 60 to 800 horse-power in size, are represented in the work.

The method of obtaining the constants is a graphical one, and may be most clearly explained by means of an example. The diameter of the piston-rod is calculated in order to insure sufficient stiffness, the rod being treated as a long compression member. Using Euler's formula, and assuming the length of the rod to be the same as that of the stroke, it can be readily shown that

$$d = C'\sqrt{SD^2L^2}, \quad . \quad . \quad . \quad . \quad . \quad . \quad . \quad . \quad (1)$$

where d is the diameter of the rod, S the steam pressure, D the diameter of the piston, L the length of stroke, and C' a constant. Assuming a constant value for S and combining it with C',

$$d = C\sqrt{DL}. \quad . \quad . \quad . \quad . \quad . \quad . \quad . \quad . \quad (2)$$

Values of d and $\sqrt{DL}$ taken from the data were plotted upon co-ordinate paper, the series of points for each make of engine

* Sibley Journal and Trans. A. S. M. E., Vol. XVIII, and Bulletin of the University of Wisconsin.

UNIVERSITY OF CALIFORNIA

being connected in order by straight lines. A double circle indicated two co-incident points. A straight line representing in position and direction the mean of the different series was then drawn as a heavy full line, and two others marking the extremes were drawn as heavy broken lines. The location of these mean and extreme lines was determined simply by inspection; they were drawn through the origin of co-ordinates when possible. The slope of these lines determine the mean and extreme values of the constant C in equation (2).

The same general method was employed in the case of each of the other parts treated, a rational formula being used when practicable. In all work involving the power of the engine, the rating has been taken at 100 pounds per square inch gauge pressure, cut-off at quarter stroke, non-condensing. Where the steam pressure is a factor in the constant, values of the constant at other pressures than 100 pounds have been computed and tabulated. Factors of safety and stresses are calculated on the assumption that the unbalanced pressure on the piston is 100 pounds per square inch.

The notation used is as follows:

D = diameter of piston;
L = length of stroke;
A = area of piston;
S = steam pressure (gage);
H.P. = rated horse-power;
N = revolutions per minute;
C and B = constants.

All dimensions are in inches unless otherwise stated.

Piston-rod.—The formula is $d = C\sqrt{DL}$ and

$$d = .112\sqrt{DL} \text{ for the mean,}$$
$$= .136\sqrt{DL} \text{ for the maximum,}$$
$$= .098\sqrt{DL} \text{ for the minimum.}$$

If L_1, the free length of the piston-rod is taken at $1.1L$ we have, on substitution in Euler's formula,

$$P = \frac{\pi^2}{4}\frac{EI}{L^2},$$

$$100\frac{\pi D^2}{4} = \frac{\pi^2 \times 30{,}000{,}000 \pi d^4}{4 \times 1.21 L^2 \times 64},$$

$$d = .068\sqrt{DL}.$$

The factors of safety in the above cases are $\left(\frac{112}{68}\right)^4$, $\left(\frac{136}{68}\right)^4$, and $\left(\frac{98}{68}\right)^4$, since the strength varies as the fourth power of the diameter of the rod.

* Piston-rod, $d = C\sqrt{DL}$.

Steam Pressure.	Mean Constant.	Maximum Constant.	Minimum Constant.
80	.106	.129	.093
100	.112	.136	.098
120	.117	.142	.102
150	.124	.150	.108

Connecting-rod.—Only rods of circular mid-section are considered. The formula is similar to the preceding, so that $d = C'\sqrt{SD^2L_1^2} = C\sqrt{DL_1}$, where L_1 is the length of the rod from center to center and d is the diameter in the middle. The constants obtained give

$$d = .0935\sqrt{DL_1} \text{ for the mean,}$$
$$= .105\ \sqrt{DL_1} \text{ for the maximum,}$$
$$= .0816\sqrt{DL_1} \text{ for the minimum.}$$

The factors of safety are $(1.94)^4$, $(2.18)^4$, and $(1.69)^4$. The values of L vary from $2.75L$ to $3L$, or from $5\frac{1}{2}$ to 6 "cranks."

* Connecting-rod, $d = C\sqrt{DL_1}$

Steam Pressure	Mean Constant.	Maximum Constant.	Minimum Constant.
80	.0885	.0994	.0763
100	.0935	.1050	.0816
120	.0978	.1100	.0854
150	.1030	.1160	.0893

* Barr and Trooien give practically the same values.

Main Journal.—The well-known formula for torsion is used, $d=C\sqrt{\frac{\text{H.P.}}{N}}$ and the constants obtained give

$$d=6.36\sqrt{\frac{\text{H.P.}}{N}} \text{ for the mean,}$$

$$=7.8\sqrt{\frac{\text{H.P.}}{N}} \text{ for the maximum,}$$

$$=5.66\sqrt{\frac{\text{H.P.}}{N}} \text{ for the minimum.}$$

The stresses in the outer fiber corresponding to these constants are respectively 1250, 678, and 1775 pounds per square inch.

The corresponding constants by Barr are 6.8, 8.0, and 6.0 respectively for one journal only, side-crank engines.

Trooien gives the following values for the constants in the formula

$$d=C\sqrt{\frac{\text{H.P.}}{N}}-B.$$

$B=.30$;
$C=7.2$ mean value;
$=8.0$ maximum value;
$=6.4$ minimum value.

The length of the bearing necessary for cool running is given by the formula $l=C\frac{\text{H.P.}}{L}$,

$$l=1.56\frac{\text{H.P.}}{L}+7 \text{ for the mean,}$$

$$=2.27\frac{\text{H.P.}}{L}+7 \text{ for the maximum,}$$

$$=0.86\frac{\text{H.P.}}{L}+7 \text{ for the minimum.}$$

Using the empirical formula $l=Cd$ the constants obtained by Barr and Trooien give

$l=1.9d$ for the mean,
$=2.1d$ for the maximum,
$=1.7d$ for the minimum.

To prevent "seizing," the bearing area must be made proportional to the total pressure. The formula used is $dl = C'SA = CD^2$ and the constants obtained give

$$\begin{aligned} * dl &= .44D^2 \text{ for the mean,} \\ &= .503D^2 \text{ for the maximum,} \\ &= .36D^2 \text{ for the minimum.} \end{aligned}$$

Neglecting the weight of the fly-wheel and the pull of the belt, the bearing pressures corresponding to the constants are respectively 178.5, 156, and 218 pounds per square inch of projected area.

MAIN JOURNAL, $dl = CD^2$.

Steam Pressure.	Mean Constant.	Maximum Constant.	Minimum Constant.
80	.352	.402	.288
100	.440	.503	.360
120	.528	.604	.432
150	.660	.755	.540
* 125	.60	.66	.50

Crank-pin.—Only "overhung" cranks are considered. The constants obtained give for the length

$$\begin{aligned} l &= .515\frac{\text{H.P.}}{L} + 2'' \text{ for the mean,} \\ &= .655\frac{\text{H.P.}}{L} + 2'' \text{ for the maximum,} \\ &= .345\frac{\text{H.P.}}{L} + 2'' \text{ for the minimum.} \end{aligned}$$

Barr uses the same formula with constants 20% greater, namely, .6, .8, and .4 respectively.

The base formula $l = C\frac{\text{H.P.}}{L}$ is derived from the fact that the projected area of the pin should be proportional to the heat (arising from lost work of friction) which must be dissipated.

* Barr and Trooien give practically the same values.

The empirical formula $d = CD$ gives

$$d = .278D \text{ for the mean,}$$
$$= .339D \text{ for the maximum,}$$
$$= .221D \text{ for the minimum.}$$

Trooien gives .27, .32, and .21 as the constants from overhung crank-pins of Corliss type, using $l = 1.14d$ as the mean relation of length to diameter of pin. The constants in the formula $l = Cd$ are

$$C = 1.14 \text{ mean value,}$$
$$= 1.30 \text{ maximum value,}$$
$$= 1.0 \text{ minimum value.}$$

The formula for the diameter of the pin is $d = C'\sqrt[3]{SD^2l} = C\sqrt[3]{D^2l}$ and the constants given

$$d = .384\sqrt[3]{D^2l} \text{ for the mean,}$$
$$= .500\sqrt[3]{D^2l} \text{ for the maximum,}$$
$$= .320\sqrt[3]{D^2l} \text{ for the minimum.}$$

Assuming the whole load to be concentrated at the outer end of the pin, the stresses corresponding to these constants are respectively 14,150, 6,400, and 25,000 pounds per square inch.

CRANK-PIN, $d = C\sqrt[3]{D^2l}$.

Steam Pressure.	Mean Constant.	Maximum Constant.	Minimum Constant.
80	.356	.464	.297
100	.384	.500	.320
120	.408	.531	.340
150	.440	.572	.366

The projected area is given by

$$* dl = .07D^2 \text{ for the mean,}$$
$$= .09D^2 \text{ for the maximum,}$$
$$= .05D^2 \text{ for the minimum.}$$

* Barr gives the same constants.

The corresponding pressures are respectively 1120, 865, and 1640 pounds per square inch.

CRANK-PIN, $dl=CD^2$.

Steam Pressure.	Mean Constant.	Maximum Constant.	Minimum Constant.
80	.056	.073	.041
100	.070	.090	.050
120	.084	.109	.061
150	.105	.136	.077

Cross-head Pin.—The length is usually the same as that of the crank-pin. In the formula $l=Cd$, Trooien gives

$C=1.43$, Barr gives $C=1.3$ mean value,
$=1.9$ $=1.5$ maximum value,
$=1.0$, $=1.0$ minimum value.

For cross bending if $l=1.25d$ Trooien gives for C in formula $d=CD$,

$C=.25$ mean value,
$=.28$ maximum value,
$=.17$ minimum value

The bearing area is given by

* $dl=.058D^2$ for the mean,
$=.083D^2$ for the maximum,
$=.042D^2$ for the minimum.

CROSS-HEAD PIN, $dl=CD^2$.

Steam Pressure.	Mean Constant.	Maximum Constant.	Minimum Constant.
80	.046	.066	.034
100	.058	.083	.042
120	.070	.100	.050
150	.087	.125	.063

* Barr gives the same values.

Cross-head Shoes.—The area of the shoe or shoes on which the pressure comes is given by the formula

$$\text{Area} = .37D^2 \text{ for the mean,}$$
$$= .52D^2 \text{ for the maximum,}$$
$$= .23D^2 \text{ for the minimum.}$$

The greatest pressures on the guide corresponding to these constants is 36.1, 58, and 25.6 pounds per square inch respectively.

CROSS-HEAD SHOE, $Area = CD^2$.

Steam Pressure	Mean Constant.	Maximum Constant.	Minimum Constant.
80	.296	.416	.184
100	.370	.520	.230
120	.444	.624	.276
150	.555	.781	.345

Steam Ports and Pipes.—The areas of the ports are given by the formula, area port $= CA \times$ piston speed and the constants obtained give

$$\text{Area steam port} = .000152A \times \text{piston speed for the mean,}$$
$$= .000208A \times \text{piston speed for the maximum,}$$
$$= .000108A \times \text{piston speed for the minimum.}$$

and

$$\text{Area exhaust port} = .000181A \times \text{piston speed for the mean,}$$
$$= .000256A \times \text{piston speed for the maximum,}$$
$$= .000239A \times \text{piston speed for the minimum.}$$

As the piston speed is generally 600 feet per minute (with 800 for a maximum and 400 for a minimum) we have more simply,

$$\text{Area steam port} = .09A \text{ for the mean,}$$
$$= .10A \text{ for the maximum,}$$
$$= .08A \text{ for the minimum.}$$

and

$$\text{Area exhaust port} = .11A \text{ for the mean,}$$
$$= .125A \text{ for the maximum,}$$
$$= .10A \text{ for the minimum.}$$

---

* Barr and Trooien use the same values.

The velocity of steam in

Steam ports is 6.800 for the mean,
9.000 for the maximum,
5.000 for the minimum.
Exhaust ports is 5500 for the mean,
7000 for the maximum,
4000 for the minimum.
Steam pipes is 6000 for the mean,
8000 for the maximum,
5000 for the minimum.
Exhaust pipes is 3800 for the mean,
4700 for the maximum,
2800 for the minimum.

The diameter of the steam-pipe is given by

$d = .324D$ for the mean,
$= .373D$ for the maximum,
$= .253D$ for the minimum.

The diameter of the exhaust-pipe is given by

$d = .400D$ for the mean,
$= .463D$ for the maximum,
$= .357D$ for the minimum.

Belting.—The mean belt speed is 3900 feet per minute, varying from 2600 to 5600 feet per minute. The following constants were also observed:

Square feet belt per minute = 27.4 H.P. + 1250 for the mean,
= 29.0 H.P. + 3000 for the maximum,
= 23.2 H.P. —— for the minimum.

Barr gives

Square feet belt per minute = 35 H.P. for the mean,
= 42 H.P. for the maximum,
= 30 H.P. for the minimum.

Trooien gives

Square feet belt per minute = 21 H.P. + 1000 mean value,
= 35 H.P. + 1000 maximum value,
= 18.2 H.P. + 1000 minimum value.

The Weight of the Engine, including the fly-wheel, is given by

Total weight = 148 H.P. for the mean,
= 195 H.P. for the maximum,
= 112 H.P. for the minimum.

Trooien gives

= 132 H.P. for the mean,
= 164 H.P. for the maximum,
= 102 H.P. for the minimum.

The Steam Cylinder.—The mean thickness of the cylinder is given by the formula $t = .024D + .66$ inch.

Barr gives $t = .05D + .3$ inch,
$t = .054D + .28$ inch mean value,

Trooien, $= .072D + .28$ maximum value,
$= .035D + .28$ minimum value.

for both high and slow speed engines.

Flanges.—The mean thickness of the flanges and heads is $1.25t$, with extremes of $1.0t$ and $1.7t$.

Bolts.—The number of cylinder-head bolts is expressed by $N = CD$, where $C = .7$ and $N =$ number of bolts.

The sizes of bolts vary from $\frac{3}{4}''$ to $1\frac{3}{8}''$, generally being from $\frac{7}{8}''$ to $1\frac{1}{4}''$. The least number used is eight. Neglecting the load due to screwing up, the total cross-section of the bolts at the root of the thread is given by $a = C'SD^2 = CD^2$. The constants obtained give

$a = .0199D^2$ for the mean,
$= .0405D^2$ for the maximum,
$= .0138D^2$ for the minimum.

The stresses on the bolts corresponding to these constants are respectively 3950, 1940, and 5960 pounds per square inch.

CYLINDER-HEAD BOLTS, $A = CD^2$.

Steam Pressure.	Mean Constant.	Maximum Constant.	Minimum Constant.
80	.0159	.0324	.0110
100	.0199	.0405	.0138
120	.0239	.0486	.0166
150	.0298	.0607	.0207

Barr gives $d = \frac{D}{40} + \frac{1}{2}$ inch, where d is the nominal diameter of the stud. Trooien gives $d = .04D + \frac{3}{8}$ inch.

Piston.—The face or length of the piston is given by

$$\begin{aligned} \text{Face} &= .330D \text{ for the mean,} \\ &= .445D \text{ for the maximum,} \\ &= .257D \text{ for the minimum.} \end{aligned}$$

Barr and Trooien give the same values.

The thickness of piston shell is .6 to .7 of the thickness of the cylinder walls.

There are generally two piston rings turned to a diameter $\frac{1}{4}$ inch larger than the diameter of the cylinder.

Clearance volume varies from 2 to 5 per cent in Corliss engines. Ratio of length of stroke to cylinder diameter in engines having a speed less than 110 revolutions per minute.

$$\begin{aligned} L &= CD + B, \\ B &= 8 \text{ in.,} \\ C &= 1.63 \text{ mean value,} \\ &= 2.40 \text{ maximum value,} \\ &= 1.15 \text{ minimum value.} \end{aligned}$$

For engines having a speed between 110 and 200 revolutions per minute,

$$\begin{aligned} L &= CD, \\ C &= 1.36 \text{ mean value,} \\ &= 1.88 \text{ maximum value,} \\ &= 1.03 \text{ minimum value.} \end{aligned}$$

Fly-wheels.—Some makers consider only the effect of the rim, others take various proportions of the weight of the hub and arms into consideration. For standard Corliss engines Trooien gives

$$W = C\left(\frac{\text{H.P.}}{D_1{}^2N^3} - B\right),$$

or

$$W = C\frac{\text{H.P.}}{D_1{}^2N^3} - K;$$

$B = .000,000,004,5,$
$C = 890,000,000,000$ mean value,
$= 1,330,000,000,000$ maximum value,
$= 625,000,000,000$ minimum value

The corresponding values of K are

$K = 4000$ mean value,
$= 6000$ maximum value,
$= 2800$ minimum value.

The diameter of the fly-wheel in inches is CL.

$C = 4.4$ mean value,
$= 5.25$ maximum value,
$= 3.25$ minimum value.

The width of the face is

$$W = C(D_1 - B),$$

or

$$W = CD_1 - K;$$

$B = 50;$
$C = .22$ mean value,
$= .30$ maximum value,
$= .18$ minimum value.
$K = 13$ mean value,
$= 15$ maximum value,
$= 9$ minimum value.

Velocity of the rim is

68 feet per second mean velocity,
82 feet per second maximum velocity,
40 feet per second minimum velocity.

A note with respect to the materials used may be of interest. Piston-rods usually are made of mild steel, indifferently specified as "open-hearth" or "machinery" steel, but one maker using crucible steel. Connecting-rods are made of both wrought-iron and steel, with no marked preponderance in favor of either. For crank-shafts, most builders use wrought iron, but open-hearth and crucible steel are also employed. Crank-pins and cross-head pins are usually the same as the piston-rod; a few cross-heads are cast solid with the pin, both steel and iron being used.

CONSTANTS FOR HIGH-SPEED ENGINE DESIGN.*

In designing the modern high-speed automatic engine, it has been found that the constants used for the slower type of engine do not give satisfactory results. It was for the purpose of obtaining these constants that the present thesis was undertaken.

Printed blanks were sent to all the manufacturers of high-speed automatic engines, with the request to fill in the dimensions and weights asked for. Ten responded in time to permit the use of their data. About six or eight sizes of center crank engines of each maker were selected, ranging from 35 to 250 horse-power.

Rational formulæ were selected for all the important parts of the engine. To illustrate the method of deriving the constants, we will take a particular case. The formula for the diameter of the piston-rod is

$$d=\sqrt{SC'D^2L^2}, \quad . \quad . \quad . \quad . \quad . \quad . \quad . \quad (1)$$

where d is the diameter of rod, S the steam pressure (100 pounds gage), C' a constant, D the diameter of the piston, and L the length of stroke. Combining S and C' into one constant, C, we have

$$d=C\sqrt{DL}, \quad . \quad . \quad . \quad . \quad . \quad . \quad . \quad (2)$$

---

* See Sibley Journal, Trans. A. S. M. E., Vol. XVIII, and Bulletin of University of Wisconsin.

We substituted in (2) the values of d, D, and L, taken from the data, and then plotted d as one co-ordinate and $\sqrt{DL}$ as the other. The points were marked by a small circle, and where two points coincided, by a double circle. All the points of each engine were connected by a certain broken line. A mean line, and two extreme lines were drawn, and from their equations, the constants were obtained. x = diameter of piston-rod, $y = \sqrt{DL}$; therefore, since $d = C\sqrt{DL}$, $c = \frac{C\sqrt{DL}}{\sqrt{DL}} = \frac{x}{y}$ = cotangent of the angle with the horizontal. In some cases, as in equation (1), the constant varies as some power of the steam pressure. For these cases tables have been constructed giving the constant for each increase of 10 pounds, from 50 to 200. These tables have been abbreviated for the purposes of this abstract. For simplicity all dimensions are in inches unless otherwise specified, and whenever the steam pressure is a factor, it has been taken at 100 pounds gage. In the case of engines not so rated, that pressure has been stated as safe. The complete derivation of the formulas here given may be found by reference to the original thesis.

In this work the following conventions have been used:

A = area of piston;
D = diameter of piston;
L = length of stroke;
H.P. = horse-power;
S = steam pressure per square inch;
N = revolutions per minute;
d = diameter of part under discussion,
l = length of part under discussion;
h = height of part under discussion;
b = breadth of part under discussion.

Piston-rods.—The formula is $d = C\sqrt{DL}$, and

$$d = .145\ \sqrt{DL} \text{ for the mean,}$$
$$= .1775\sqrt{DL} \text{ for the maximum,}$$
$$= .119\ \sqrt{DL} \text{ for the minimum.}$$

Barr gives the same values.

TABLE I.

PISTON-ROD, $d = C\sqrt{DL}$.

Steam Pressure.	Mean Constant.	Maximum Constant.	Minimum Constant.
50	.1220	.1490	.1000
80	.1372	.1675	.1125
110	.1487	.1815	.1219
140	.1579	.1928	.1294
170	.1659	.2023	.1359
200	.1726	.2109	.1415

For steam pressures other than 100 pounds, Table I gives the constants for the various pressures.

Connecting-rods.—The usual formula is,

$$b = C'S^{\frac{1}{4}}\sqrt{DL} = C\sqrt{DL} \text{ for the breadth,}$$

and the constants obtained give

$$b = .0545\sqrt{DL} \text{ for the mean,}$$
$$= .0693\sqrt{DL} \text{ for the maximum,}$$
$$= .0443\sqrt{DL} \text{ for the minimum.}$$

The steam pressure is the same function of the constant as in the connecting-rod formula.

TABLE II.

CONNECTING-ROD, $b = C\sqrt{DL}$.

Steam Pressure.	Mean Constant.	Maximum Constant.	Minimum Constant.
50	.0459	.0583	.0376
80	.0515	.0655	.0419
* 110	.0558	.0710	.0454
140	.0593	.0754	.0483
170	.0623	.0792	.0507
200	.0648	.0825	.0526
† 125	.073	.094	.05

* Barr gives these values approximately.
† Trooien.

Table II gives values of the constants for rectangular section only.

The height of the rod is generally considered to be twice the breadth, plus a certain percentage to compensate for the inertia of the rod itself. The following values of the height were obtained:

$$h = 2.73b \text{ for the mean,}$$
$$= 4.00b \text{ for the maximum,}$$
$$= 2.18b \text{ for the minimum.}$$

Trooien gives 2.28, 3.0, and 1.85 for the value of these constants.

The mean factor of safety of the connecting-rod with Barr's constants is 27; with Trooien's constants it is 60.

Also for the length of the rod we found,

$$l = 3.00L \text{ " cranks " for the mean,}$$
$$= 3.32L \text{ for the maximum,}$$
$$= 2.46L \text{ for the minimum.}$$

Main Journal.—For the prevention of heating, the length should be

$$l = .95\left(\frac{\text{H.P.}}{L} + 5.23\right) \text{for the mean,}$$
$$l = .96\left(\frac{\text{H.P.}}{L} + 9.04\right) \text{for the maximum,}$$
$$l = .818\left(\frac{\text{H.P.}}{L} + 3\right) \text{for the minimum.}$$

The ratio of length to the diameter was found to be

$$l = 2.03(d + .49) \text{ for the mean,}$$
$$= 2.05(d + .17) \text{ for the maximum,}$$
$$= 1.63d, \text{ for the minimum.}$$

Barr gives 2.2, 3.0, and 2.0; Trooien gives 2.1, 2.9, and 1.6.

For the prevention of expulsion of lubricant, the bearing area should be sufficiently large, and proportional to the area of piston, or

$$dl = C'SA = CA.$$

The values found for the constant give

$$dl = .489\ A \text{ for the mean,}$$
$$= .739\ A \text{ for the maximum,}$$
$$= .3675A \text{ for the minimum.}$$

Barr gives .46, .70, and .37; Trooien gives .48, .78, and .32.

TABLE III.

MAIN JOURNAL, $dl = CA$.

Steam Pressure.	Mean Constant.	Maximum Constant.	Minimum Constant.
50	.2445	.3695	.1838
80	.3912	.5912	.2940
110	.5379	.8129	.4043
140	.6846	1.0346	.5145
170	.8313	1.2563	.6248
200	.9780	1.4780	.7350

The constant in this case varies directly as the steam pressure, and Table III gives values for the constant for the different pressures.

In all these engines, the main shaft has the same diameter throughout its length, and for strength the formula is

$$d = C\sqrt{\frac{\text{H.P.}}{N}}.$$

The constants found give

$$d = 7.56\sqrt{\frac{\text{H.P.}}{N}} \text{ for the mean,}$$
$$= 8.76\sqrt{\frac{\text{H.P.}}{N}} \text{ for the maximum,}$$
$$= 5.98\sqrt{\frac{\text{H.P.}}{N}} \text{ for the minimum.}$$

Barr gives 7.3, 8.5, and 6.5; Trooien gives 6.6, 8.2, and 5.4.

Crank-pin.—For value of the constant, in the formula,

$$l = C\frac{\text{H.P.}}{L} + B,$$

which gives the length necessary to avoid heating, we found,

$$l = .333\frac{\text{H.P.}}{L} + 2.2 \quad \text{for the mean,}$$

$$= .417\frac{\text{H.P.}}{L} + 3.92 \quad \text{for the maximum,}$$

$$= .192\frac{\text{H.P.}}{L} + .88 \quad \text{for the minimum.}$$

Barr gives .30, .46, and .13 as values of C and 2.5″ as the value of B.

For bearing area, we found, from $dl = CS'A = CA$,

$$dl = .22A \quad \text{for the mean,}$$
$$= .44A \quad \text{for the maximum,}$$
$$= .0693A \quad \text{for the minimum.}$$

Barr gives .24, .44, and .17 as the values of the constant C.

TABLE IV.

CRANK-PIN, $dl = CA$.

Steam Pressure.	Mean Constant.	Maximum Constant.	Minimum Constant.
50	.110	.220	.0347
80	.176	.352	.0554
110	.242	.484	.0762
140	.308	.616	.0970
170	.374	.748	.1178
200	.440	.880	.1386

As a check the ratio of length to diameter was found and is

$$l = d \quad \text{for the mean,}$$
$$l = 1.22d \quad \text{for the maximum,}$$
$$l = .9d \quad \text{for the minimum.}$$

Trooien gives .87, 1.25, and .66 as the constants.

In center-crank engines, assuming that the distance from center to center of main bearings is $4.2d$, Trooien finds, in calculating d for strength, the following constants in the formula,

$$d = CD,$$

$$C = .40 \text{ mean value,}$$
$$= .526 \text{ maximum value,}$$
$$= .28 \text{ minimum value,}$$

Cross-head Pin.—For the bearing area the formula is

$$dl = C'SA = CA,$$

and the values of the constant found give

$$dl = .1045A \text{ for the mean,}$$
$$= .346A \text{ for the maximum,}$$
$$= .0664A \text{ for the minimum.}$$

TABLE V.

CROSS-HEAD PIN, $dl = CA$.

Steam Pressure.	Mean Constant.	Maximum Constant.	Minimum Constant.
50	.0523	.1730	.0332
80	.0836	.2768	.0531
110	.1150	.3806	.0730
140	.1463	.4844	.0930
170	.1777	.5882	.1129
200	.2090	.6920	.1328
Barr			
100	.08	.11	.06
Trooien			
125	.10	.15	.037

The ratio of length to diameter was found to be

$$l = 1.335d \text{ for the mean,}$$
$$= 2d \text{ for the maximum,}$$
$$= 1.07d \text{ for the minimum.}$$

Trooien gives 1.25, 1.5, and 1.0.

Barr gives 1.25, 2.0, and 1.0.

Cross-head Shoes.—For the bearing area of the cross-head shoes, the constants found give, in the equation,

$$\text{Area} = C'SA = CA,$$

$$\text{Area} = .611(A + 25) \text{ for the mean,}$$
$$= .698(A + 123) \text{ for the maximum,}$$
$$= .46\ (A - 2) \text{ for the minimum.}$$

TABLE VI.

CROSS-HEAD SHOES, $Area = CA$.

Steam Pressure.	Mean Constant.	Maximum Constant.	Minimum Constant.
50	.3055	.3490	.230
80	.4888	.5584	.368
110	.6721	.7678	.506
140	.8554	.9772	.644
170	1.0387	1.1866	.782
200	1.2220	1.3960	.920
Barr			
100	.63	1.60	.45
Trooien			
125	.53	.72	.37

For the maximum pressure per square inch of shoe, Barr gives

27 for the mean,
38 for the maximum,
10.5 for the minimum,

Trooien gives 39.5 for the mean,
57 for the maximum,
28 for the minimum.

Cylinder Dimensions.—The ratio of length of stroke to diameter of cylinder in engines having a speed greater than 200 revolutions per minute,

$$L = CD.$$

$C = 1.07$ mean,
$= 1.55$ maximum,
$= .82$ minimum.

Clearance volume varies from 5 to 11 per cent.

The thickness of the cylinder cover at the center varies considerably, but may be taken at 2.75 times the thickness of cylinder walls. The thickness of the flanges for holding cylinder covers may be taken at 1.12 times the thickness of the cylinder walls. For number and size of bolts, see Slow-speed Engine Design.

Piston and Piston Speed.—For obtaining the dimensions of the face of piston there is no rational formula applicable, but

an empirical formula was constructed; the ratio of face to diameter being found thus for horizontal engines,

$$\begin{aligned} \text{Face} &= .4375D \text{ for the mean,} \\ &= .65D \quad \text{for the maximum,} \\ &= .299D \quad \text{for the minimum.} \end{aligned}$$

Trooien gives .40, .47, and .30 as the constants.

For ascertaining the piston speed a curve was plotted with revolutions per minute as one co-ordinate, and length of stroke as the other. The resulting mean curve is an equilateral hyperbola showing that for this class of engines the piston speed is constant, and is 600 feet per minute.

Trooien gives

$$\begin{aligned} 600 &= \text{mean speed,} \\ 900 &= \text{maximum speed,} \\ 320 &= \text{minimum speed.} \end{aligned}$$

Steam Ports and Pipes.—In designing ports it is customary to consider the velocity of steam through the passage as equal to the ratio of the area of the piston to the area of the passage, multiplied by the piston speed. Since the piston speed is quite constant, about 600 feet per minute, the area of these passages is proportional to the area of the piston. For the steam ports the relation is

$$\begin{aligned} \text{Area of steam ports} &= .0936A \text{ for the mean,} \\ &= .136A \quad \text{for the maximum,} \\ &= .0544A \text{ for the minimum.} \end{aligned}$$

Barr gives for the velocity of steam through steam ports,

$$\begin{aligned} &5500 \text{ mean,} \\ &6500 \text{ maximum,} \\ &4500 \text{ minimum.} \end{aligned}$$

$$\begin{aligned} \text{Area steam ports} &= .11A \text{ mean,} \\ &= .13A \text{ maximum,} \\ &= .09A \text{ minimum.} \end{aligned}$$

For the steam-pipes,

$$\begin{aligned} \text{Diam. of pipe} &= .452D - 1.42 \text{ for the mean,} \\ &= .54D \ - 1.02 \text{ for the maximum,} \\ &= .382D - 1.07 \text{ for the minimum.} \end{aligned}$$

Barr gives for the velocity of steam through pipes,

$$\begin{aligned} &6500 \text{ mean,} \\ &7000 \text{ maximum,} \\ &5800 \text{ minimum.} \end{aligned}$$

$$\begin{aligned} \text{Diam. of pipe} &= .30D \text{ mean,} \\ &= .32D \text{ maximum} \\ &= .29D \text{ minimum.} \end{aligned}$$

For the exhaust-pipe,

$$\begin{aligned} \text{Diam. of pipe} &= .503D - 1.4 \text{ for the mean,} \\ &= .5D \quad\quad \text{for the maximum,} \\ &= .5D \quad - 2.24 \text{ for the minimum.} \end{aligned}$$

Barr gives for the velocity of steam through exhaust pipes,

$$\begin{aligned} &4400 \text{ mean,} \\ &5500 \text{ maximum,} \\ &2500 \text{ minimum.} \end{aligned}$$

$$\begin{aligned} \text{Diam. of exhaust pipe} &= .37D \text{ mean,} \\ &= .50D \text{ maximum,} \\ &= .33D \text{ minimum.} \end{aligned}$$

Belting.—The relation between the square feet of belting per hour and horse-power transmitted was found to be

$$\begin{aligned} \text{Square feet belting per hour} &= 2000(\text{H.P.} + 50) \text{ for the mean,} \\ &= 2000(\text{H.P.} + 95) \text{ for the maximum,} \\ &= 2000(\text{H.P.} - 50) \text{ for the minimum.} \end{aligned}$$

Barr gives

$$\begin{aligned} \text{Square feet belting per minute} &= 55 \text{ H.P. mean,} \\ &= 70 \text{ H.P. maximum,} \\ &= 40 \text{ H.P. minimum,} \end{aligned}$$

Fly-wheel.—For governing, Professor Thurston in his "Manual of the Steam Engine," shows that the weight of the rim of fly-wheel is proportional to $\frac{\text{H.P.}}{D_1^2 N^3}$, where D_1 is the diameter of wheel in inches. The constants found give

$$\text{Weight of rim} = 833{,}000{,}000{,}000\frac{\text{H.P.}}{D_1^2N^3} \text{ for the mean,}$$

$$= 2{,}780{,}000{,}000{,}000\frac{\text{H.P.}}{D_1^2N^3} \text{ for the maximum,}$$

$$= 341{,}000{,}000{,}000\frac{\text{H.P.}}{D_1^2N^3} \text{ for the minimum,}$$

Barr gives 1200, 2000 and 650 billions for the constants.

Trooien gives 1300, 2800, and 660 billions for the constants for engines up to 175 H.P. For large engines, however, the formula $W = C \times \frac{\text{H.P.}}{D_1^2N^3} + B$ seems better.

$$B = 1000,$$
$$C = 720{,}000{,}000{,}000 \text{ mean,}$$
$$= 1{,}140{,}000{,}000{,}000 \text{ maximum,}$$
$$= 330{,}000{,}000{,}000 \text{ minimum.}$$

The relation between the length of stroke and the diameter of the fly-wheel is given by $D_1 = CL$.

$$C = 4.4 \text{ mean,}$$
$$= 5.0 \text{ maximum,}$$
$$= 3.4 \text{ minimum.}$$

For the linear velocity of the periphery, we averaged the velocities of each maker, and then took a total average. This average gave 4232 feet per minute, and varies from 5730 to 3060 feet per minute.

Reciprocating Parts.—The weight of reciprocating parts is proportional to $\frac{D^2}{LN^2}$, and the constants give

$$\text{Weight of parts} = 1{,}850{,}000\frac{D^2}{LN^2},$$

the mean curve being an equilateral hyperbola.

Trooien gives

2,000,000 mean,
3,400,000 maximum,
1,370,000 minimum.

In cases, where obtainable, the balance weight opposite the crank-pin was about 75 per cent of the weight of the reciprocating parts.

Weight of Engine.—It being of possible interest, the relation between the total weight of engine and rated horse-power was found, and is

$$\text{Weight of engine} = 117(\text{H.P.} - 7).$$

For belt-connected high-speed engines Trooien gives for C in formula $W = C \times \text{H.P.}$,

$$\begin{aligned} C &= 82 \text{ mean,} \\ &= 120 \text{ maximum} \\ &= 52 \text{ minimum.} \end{aligned}$$

For direct-connected engines the weight of the engine without the generator was 10 to 25 per cent greater than the weight of belt-connected engines of the same capacity.

APPENDIX.

I.

IMPORTANT PROPERTIES OF FAMILIAR SUBSTANCES.

	Specific Gravity. Water, 1.	Specific Heat, Water, 1.	Melting-points, Degrees Fahr.	Weight in Pounds.
				Per cu. ft.
Metals from 32° to 212°				
Aluminum	2.63	0.212	....	0.1100
Antimony	6.712	0.0508	810°	0.2428
Bismuth	9.823	0.0308	476	0.3533
Brass	8.1	0.0939	1692	0.2930
Copper	8.788	0.092	1996	0.3179
Iron, cast	7.5	0.1298	2250	0.2707
" wrought	7.744	0.1138	2900	0.2801
Gold	19.258	0.0324	2590	0.6965
Lead	11.352	0.0314	608	0.4106
Mercury at 32°	13.598	0.0333	−39	0.4918
Nickel	8.800	0.1086	2640	0.3183
Platinum	16.000	0.0324	3700	0.5787
Silver	10.474	0.056	2000	0.3788
Steel	7.834	0.1165	4000	0.2916
Tin	7.291	0.0562	446	0.2637
Zinc	7.191	0.0953	680	0.26
Liquids:				
Alcohol (mean)	0.9	0.6588		
Oil, petroleum	0.88	0.31		
Steam at 212°	0.0006	0.487		
Turpentine	0.87	0.416		
Water, 62°	1.000	1.000		
Solid:				
Ice at 32°	0.922	0.504		

Gases.	Specific Gravity, Air = 1, Temp. 32° F. Atmos. Pressure.	Specific Heat. C_v.	C_p.	Specific Heat K_v.	K_p	Weight per Cu. Ft. at 32° F. Atm. Pres.
Air	1.0000	0.1689	0.2375	131.40	184.77	0.0807
Alcohol	1.589	0.398	0.438	.....	.....	.....
Acetylene gas	0.8982	0.245	.....	.....	.....	0.0730
Carbon monoxide, CO	0.9764	0.173	0.245	134.59	190.61	0.0781
Carbon dioxide, CO_2	1.5290	0.171	0.216	133.04	168.05	0.1234
Ethylene, C_2H_4	0.9847	0.332	0.404	259.3	314.31	0.0794
Hydrogen	0.0695	2.406	3.409	1871.87	2652.2	0.0056
Methane, CH_4	0.5560	0.467	0.593	363.33	461.35	0.0449
Nitrogen	0.9714	0.173	0.244	134.59	189.83	0.0784
Oxygen	1.1051	0.155	0.2175	120.59	169.21	0.0892
Sulphur dioxide, SO_2	2.2130	.....	0.154	.....	.....	0.1786

Gases.	Weight per Cu. Ft. at 62° F.	Volume of One Pound, at		Specific Heat per Cubic Foot			
				at Constant Pressure.		at Constant Volume.	
		32° F.	62° F.	32° F.	62° F.	32° F.	62° F.
Air	0.7612	12.39	13.14	0.0192	0.0181	0.0136	0.0127
Carbon monoxide	0.0736	12.82	13.61	0.0195	0.0182	0.0135	0.0127
Carbon dioxide	0.1156	8.15	8.65	0.0266	0.0251	0.0210	0.0198
Ethylene	0.0735	12.82	13.60	0.0343	0.0297	0.0259	0.0244
Hydrogen	0.00528	178.2	189.4	0.0191	0.0180	0.0135	0.0127
Methane	0.0421	22.39	23.75	0.0265	0.0250	0.0209	0.0197
Nitrogen	0.0789	12.73	13.53	0.0191	0.0180	0.0136	0.0128
Oxygen	0.0841	11.20	11.90	0.0194	0.0183	0.0138	0.0130

II.

HYPERBOLIC OR NAPERIAN LOGARITHMS.

N.	Log.	N.	Log.	N.	Log.	N.	Log.	N.	Log.
1.00	0.0000	2.30	0.8329	3.60	1.2809	4.90	1.5892	6.40	1.8563
1.05	0.0488	2.35	0.8544	3.65	1.2947	4.95	1.5994	6.50	1.8718
1.10	0.0953	2.40	0.8755	3.70	1.3083	5.00	1.6094	6.60	1.8871
1.15	0.1398	2.45	0.8961	3.75	1.3218	5.05	1.6194	6.70	1.9021
1.20	0.1823	2.50	0.9163	3.80	1.3350	5.10	1.6292	6.80	1.9169
1.25	0.2231	2.55	0.9361	3.85	1.3481	5.15	1.6390	6.90	1.9315
1.30	0.2624	2.60	0.9555	3.90	1.3610	5.20	1.6487	7.00	1.9459
1.35	0.3001	2.65	0.9746	3.95	1.3737	5.25	1.6582	7.20	1.9741
1.40	0.3365	2.70	0.9933	4.00	1.3863	5.30	1.6677	7.40	2.0015
1.45	0.3716	2.75	1.0116	4.05	1.3987	5.35	1.6771	7.60	2.0281
1.50	0.4055	2.80	1.0296	4.10	1.4110	5.40	1.6864	7.80	2.0541
1.55	0.4383	2.85	1.0473	4.15	1.4231	5.45	1.6956	8.00	2.0794
1.60	0.4700	2.90	1.0647	4.20	1.4351	5.50	1.7047	8.25	2.1102
1.65	0.5008	2.95	1.0818	4.25	1.4469	5.55	1.7138	8.50	2.1401
1.70	0.5306	3.00	1.0986	4.30	1.4586	5.60	1.7228	8.75	2.1691
1.75	0.5596	3.05	1.1154	4.35	1.4701	5.65	1.7317	9.00	2.1972
1.80	0.5878	3.10	1.1314	4.40	1.4816	5.70	1.7405	9.25	2.2246
1.85	0.6152	3.15	1.1474	4.45	1.4929	5.75	1.7492	9.50	2.2513
1.90	0.6419	3.20	1.1632	4.50	1.5041	5.80	1.7579	9.75	2.2773
1.95	0.6678	3.25	1.1787	4.55	1.5151	5.85	1.7664	10.00	2.3026
2.00	0.6931	3.30	1.1939	4.60	1.5261	5.90	1.7750	11.00	2.3979
2.05	0.7178	3.35	1.2090	4.65	1.5369	5.95	1.7834	12.00	2.4849
2.10	0.7419	3.40	1.2238	4.70	1.5476	6.00	1.7918	13.00	2.5649
2.15	0.7655	3.45	1.2384	4.75	1.5581	6.10	1.8083	14.00	2.6391
2.20	0.7885	3.50	1.2528	4.80	1.5686	6.20	1.8245	15.00	2 7081
2.25	0.8109	3.55	1.2669	4.85	1.5790	6.30	1.8405	16.00	2.7726

III.

HEATING VALUES OF VARIOUS SUBSTANCES.

The following table gives the heating values of different pure fuels as determined by burning them in oxygen in a calorimeter.

	Heat-units.		Authority.
	Cent.	Fahr.	
Acetylene, C_2H_2 to CO_2 and H_2O	10,109	18,196	Thomsen
Alcohol, methyl or wood, CH_4O	5,307	9,558	Favre and Silberman
" ethyl or sugar, C_2H_6O	7,183	12,933	" " "
Benzole gas, C_6H_6 to CO_2 and H_2O	10,102	18,184	Thomsen
	9,915	17,847	Favre and Silberman
Benzene	9,977	17,862	Stohman
Carbon (wood charcoal) to CO_2	8,080	14,544	Favre and Silberman
	8,137	14,647	Berthelot
Carbon to CO	2,473	4,451	Favre and Silberman
CO to CO_2 per unit of CO	2,403	4,323	" " "
	2,385	4,293	Thomsen
CO to CO_2 per unit of C	5,607	10,093	Favre and Silberman
Ethylene (Olefiant gas), C_2H_4 to CO_2	11,858	21,344	" " "
	11,957	21,523	Thomsen
Gas, illuminating	5,400	9,720	Various
Hydrogen gas to H_2O	34,462	62,032	Favre and Silberman
	34,342	61,816	Thomsen
Methane (Marsh gas), CH_4 to CO_2 and H_2O	13,120	23,616	"
	13,063	23,513	Favre and Silberman
Naphthalene	9,700	17,460	Various
Sulphur to SO_2	2,250	4,050	N. W. Lord

IV.

OXYGEN AND AIR REQUIRED, THEORETICALLY, FOR THE COMBUSTION OF VARIOUS SUBSTANCES.

Pure dry air is a mixture made up of 20.91 parts of O and 79.09 parts of N by volume (viz., in the ratio of one part of O to 3.782 parts of N), or 23.15 parts of O and 76.85 parts of N by weight (viz., in the ratio of 1 part of O to 3.32 parts of N).

	Lbs. of O per lb. Fuel.	Lbs. of N $3.32 \times O$.	Air per lb. $= 4.32 \times 0$	Gaseous Product per lb.
Carbon to CO_2 ..... $C+2O=CO_2$	$2\frac{2}{3}$	8.85	11.52	12.52
Carbon to CO ..... $C+O=CO$	$1\frac{1}{3}$	4.43	5.76	6.76
Carbon monoxide to CO_2 .. $CO+O=CO_2$	$\frac{4}{7}$	1.90	2.47	3.47
Alcohol ..... $C_2H_6O+6O=2CO_2+3H_2O$	$2\frac{2}{13}$	6.93	8.94	9.94
Acetylene ..... $C_2H_2+5O=2CO_2+H_2O$	$3\frac{1}{13}$	9.99	13.00	14.00
Ethylene ..... $C_2H_4+6O=2CO_2+2H_2O$	$3\frac{3}{7}$	10.1	13.14	14.14
Hydrogen ..... $2H+O=H_2O$	8	26.56	34.56	35.56
Methane ..... $CH_4+4O=CO_2+H_2O$	4	13.28	17.28	18.28
Sulphur ..... $S+2O=SO_2$	1	3.32	4.32	5.32

V.

RELATIVE HUMIDITY, PER CENT.

Dry Thermometer, ° F.	Difference between the Dry and Wet Thermometers, Degrees F.																								
	1	2	3	4	5	6	7	8	9	10	11	12	13	14	15	16	17	18	19	20	21	22	23	24	26	28	30
	Relative Humidity, Saturation being 100. (Barometer = 30 ins.)																										
32	89	79	69	59	49	39	30	20	11	2																	
40	92	83	75	68	60	52	45	37	29	23	15	7	0														
50	93	87	80	74	67	61	55	49	43	38	32	27	21	16	11	5	0										
60	94	89	83	78	73	68	63	58	53	48	43	39	34	30	26	21	17	13	9	5	1						
70	95	90	86	81	77	72	68	64	59	55	51	48	44	40	36	33	29	25	22	19	15	12	9	6			
80	96	91	87	83	79	75	72	68	64	61	57	54	50	47	44	41	38	35	32	29	26	23	20	18	12	7	
90	96	92	89	85	81	78	74	71	68	65	61	58	55	52	49	47	44	41	39	36	34	31	29	26	22	17	13
100	96	93	89	86	83	80	77	73	70	68	65	62	59	56	54	51	49	46	44	41	39	37	35	33	28	24	21
110	97	93	90	87	84	81	78	75	73	70	67	65	62	60	57	55	52	50	48	46	44	42	40	38	34	30	26
120	97	94	91	88	85	82	80	77	74	72	69	67	65	62	60	58	55	53	51	49	47	45	43	41	38	34	31
140	97	95	92	89	87	84	82	79	77	75	73	70	68	66	64	62	60	58	56	54	53	51	49	47	44	41	38

VI.

WEIGHTS OF AIR, VAPOR OF WATER, AND SATURATED MIXTURES OF AIR AND VAPOR AT DIFFERENT TEMPERATURES, UNDER THE ORDINARY ATMOSPHERIC PRESSURE OF 29.921 INCHES OF MERCURY

Temperature, Fahrenheit.	Weight of a Cubic Ft. of Dry Air at Different Temperatures, lbs.	Elastic Force of Vapor, Inches of Mercury.	Mixtures of Air Saturated with Vapor.			
			Elastic Force of the Air in Mixture of Air and Vapor, Inches of Mercury.	Weight of Cubic Foot of the Mixture of Air and Vapor.		Weight of Vapor mixed with 1 lb. of Air, pounds.
				Weight of the Air, lbs.	Weight of the Vapor, pounds.	Total Weight of Mixture, pounds.	
0°	.0864	.044	29 877	.0863	.000079	.086379	.00092
12	.0842	.074	29.849	.0840	.000130	.084130	.00155
22	.0824	.118	29.803	.0821	.000202	.082302	.00245
32	.0807	.181	29.740	.0802	.000304	.080504	.00379
42	.0791	.267	29.654	.0784	.000440	.078840	.00561
52	.0776	.388	29 533	.0766	.000627	.077227	.00819
62	.0761	.556	29.365	.0747	.000881	.075581	.01179
72	.0747	.785	29.136	.0727	.001221	.073921	.01680
82	.0733	1.092	28.829	.0706	.001667	.072267	.02361
92	.0720	1.501	28.420	.0684	.002250	.070717	.03289
102	.0707	2.036	27.885	.0659	.002997	.068897	.04547
112	.0694	2.731	27.190	.0631	.003946	.067046	.06253
122	.0682	3.621	26.300	.0599	.005142	.065042	.08584
132	.0671	4.752	25.169	.0564	.006639	.063039	.11771
142	.0660	6.165	23.756	.0524	.008473	.060873	.16170
152	.0649	7.930	21.991	.0477	.010716	.058416	.22465
162	.0638	10.099	19.822	.0423	.013415	.055715	.31713
172	.0628	12.758	17.163	.0360	.016682	.052682	.46338
182	.0618	15.960	13.961	.0288	.020536	.049336	.71300
192	.0609	19.828	10.093	.0205	.025142	.045642	1.22643
202	.0600	24.450	5.471	.0109	.030545	.041445	2.80230
212	.0591	29.921	0.000	.0000	.036820	.036820	Infinite.

The weight in lbs. of the vapor mixed with 100 lbs. of pure air at any given temperature and pressure is given by the formula

$$\frac{62.3 \times E}{29.92 - E} \times \frac{29.92}{p},$$

where E = elastic force of the vapor at the given temperature, in inches of mercury; p = absolute pressure in inches of mercury, = 29.92 for ordinary atmospheric pressure.

VII.

ENTROPY OF WATER AND STEAM.

Press. in lbs. per sq. in. Abs.	Temp. Fahr. Abs.	Specific Heat of Water.	Entropy of 1 lb. of Water from 32° F.	Entropy of 1 lb. of Steam $\frac{L}{T}$.	Entropy of 1 lb. of Steam from 32° F.	Press. in lbs. per sq. in. Abs.	Temp. Fahr. Abs.	Specific Heat of Water.	Entropy of 1 lb. of Water from 32° F.	Entropy of 1 lb. of Steam $\frac{L}{T}$.	Entropy of 1 lb. of Steam from 32° F.
P	T	C	θ	ψ	$\theta+\psi$	P	$T\alpha$	C	θ	ψ	$\theta+\psi$
1	562.8	1.0009	0.134	1.853	1.987	115	798.7	1.0436	0.490	1.096	1.586
2	587.1	1.0069	0.175	1.749	1.924	120	801.9	.....	0.494	1.089	1.583
3	602.4	.....	0.201	1.686	1.887	125	805.0	.....	0.498	1.082	1.580
4	614.0	.....	0.220	1.641	1.861	130	807.9	.....	0.501	1.076	1.577
5	623.0	.....	0.235	1.606	1.841	135	810.8	.....	0.505	1.069	1.574
6	631.0	.....	0.247	1.578	1.825	140	813.6	.....	0.508	1.063	1.571
7	637.7	.....	0.257	1.557	1.814	145	816.4	.....	0.512	1.057	1.569
8	643.7	.....	0.268	1.532	1.800	150	819.0	.....	0.515	1.051	1.566
9	649.2	.....	0.277	1.513	1.790	155	821.5	.....	0.518	1.045	1.563
10	654.1	.....	0.285	1.496	1.781	160	824.1	.....	0.521	1.040	1.561
15	673.9	1.0076	0.315	1.432	1.747	165	826.6	.....	0.524	1.035	1.559
20	688.8	.....	0.338	1.384	1.722	170	829.0	.....	0.527	1.030	1.557
25	700.8	.....	0.356	1.348	1.704	175	831.4	.....	0.530	1.025	1.555
30	711.1	.....	0.370	1.319	1.689	180	833.7	.....	0.533	1.019	1.552
35	720.0	.....	0.384	1.293	1.677	185	835.9	.....	0.536	1.014	1.550
40	728.0	.....	0.395	1.271	1.666	190	838.2	.....	0.539	1.009	1.548
45	735.1	.....	0.405	1.252	1.657	195	840.3	.....	0.542	1.004	1.546
50	741.7	.....	0.415	1.234	1.649	200	842.4	.....	0.544	1.001	1.545
55	747.7	.....	0.423	1.218	1.641	205	844.5	.....	0.547	0.996	1.543
60	753.4	.....	0.431	1.203	1.634	210	846.5	.....	0.549	0.992	1.541
65	758.6	1.0070	0.438	1.190	1.628	215	848.5	1.0436	0.551	0.989	1.540
70	763.5	1.0079	0.444	1.179	1.623	220	850.5	1.0439	0.554	0.984	1.538
75	768.2	1.0107	0.450	1.167	1.617	230	854.4	.....	0.557	0.976	1.535
80	772.7	1.0245	0.455	1.157	1.612	240	858.1	1.0446	0.563	0.969	1.532
85	776.9	1.0341	0.461	1.147	1.608	250	861.7	1.0454	0.567	0.962	1.529
90	780.9	1.0412	0.466	1.138	1.604	260	865.2	1.0461	0.571	0.955	1.526
95	784.7	1.0436	0.472	1.128	1.600	270	868.6	1.0470	0.575	0.948	1.523
100	788.4	.....	0.477	1.119	1.596	280	871.8	1.0478	0.579	0.941	1.520
105	792.0	.....	0.481	1.112	1.593	290	875.0	1.0486	0.583	0.935	1.518
110	795.4	.....	0.485	1.105	1.590	300	878.2	1.0495	0.587	0.928	1.515

VIII.

PROPERTIES OF SATURATED STEAM.

NOTE.—The following table gives the data required by the engineer in this connection as based upon the experiments of Regnault. The temperatures, pressures, and heat-measures are all from Regnault's experiments. The other quantities were calculated by Mr. R. H. Buel,* adopting the formulas of Rankine already given to obtain quantities not ascertained by direct experiment. The two parts of the latent heat of vaporization are separately determined, and the internal thus distinguished from the external work of expansion. British measures are adopted. The nomenclature is sufficiently well explained by the table-headings.

Pressure above a vacuum, in pounds per square inch.	Temperature, Fahrenheit degrees.	Quantities of Heat. In British Thermal Units. Required to raise the temperature of the water from 32° to $T°$.	Internal latent heat.	External latent heat.	Latent heat of evaporation at pressure P $= I + E$.	Total heat of evaporation above 32° $= S + L$.	Total heat of evaporation above 32°, in units of evaporation.	Weight of a cubic foot of steam, in pounds.	Volume. Of a pound of steam in cubic feet.	Volume. Ratio of volume of steam to volume of equal weight of distilled water at temperature of maximum density.	Pressure above a vacuum, in pounds per square inch.
p	t	q or S	ρ or I	APu or E	r or L	λ or H	U	δ or W	v or C	V	p
1	102.018	70.040	981.396	61.619	1043.015	1113.055	1.1522	.003027	330.4	20,623	1
2	126.302	94.368	961.980	64.114	1026.094	1120.462	1.1599	.005818	171.9	10,730	2
3	141.654	109.764	949.725	65.655	1015.380	1125.144	1.1647	.008522	117.3	7,325	3
4	153.122	121.271	940.597	66.773	1007.370	1128.641	1.1683	.011172	89.51	5,588	4
5	162.370	130.563	933.239	67.660	1000.899	1131.462	1.1712	.013781	72.56	4,530	5
6	170.173	138.401	927.038	68.403	995.441	1133.842	1.1737	.016357	61.14	3,816	6
7	176.945	145.213	921 654	69.041	990.695	1135.908	1.1758	.018908	52.89	3,302	7
8	182.952	151.255	916.883	69.602	986.485	1137.740	1.1777	.021436	46.65	2,912	8
9	188.357	156.699	912.584	70.106	982.690	1139.389	1.1794	.023944	41.77	2,607	9
10	193.284	161.660	908.672	70.560	979.232	1140.892	1.1810	.026437	37.83	2,361	10
11	197.814	166.225	905.083	70.967	976.050	1142.275	1.1824	.028911	34.59	2,159	11
12	202.012	170.457	901.766	71.332	973.098	1143.555	1.1837	.031376	31.87	1,990	12
13	205.929	174.402	898.683	71.663	970.346	1144.748	1.1849	.033828	29.56	1,845	13
14	209.604	178.112	895.784	71.973	967.757	1145.869	1.1861	.036265	27.58	1,721	14
14.69	212.000	180.531	893.894	72.175	966.069	1146.600	1.1869	.037928	26.37	1,646	14.69
15	213.067	181.608	893.044	72.274	965.318	1146.926	1.1872	.038688	25.85	1,614	15
16	216.347	184.919	890.458	72.549	963.007	1147.926	1.1882	.041109	24.33	1,519	16
17	219.452	188.050	888.007	72.811	960.818	1148.874	1.1892	.043519	22.98	1,434	17

* Weisbach's Mechanics, vol. ii., part ii., Dubois' translation. N. Y.: J. Wiley & Sons. 1884.

ϕ	t	q or S	ρ or I	APu or E	τ or L	λ or H	U	δ or W	v or C	V	ϕ
18	222.424	191.058	885.661	73.060	958.721	1149.779	1.1901	.045920	21.78	1,359	18
19	225.255	193.918	883.427	73.298	956.725	1150.643	1.1910	.048312	20.70	1,292	19
20	227.964	196.655	881.289	73.525	954.814	1151.469	1.1919	.050696	19.73	1,231	20
21	230.565	199.285	879.239	73.739	952.978	1152.269	1.1927	.053074	18.84	1,176	21
22	233.069	201.817	877.267	73.942	951.209	1153.026	1.1935	.055446	18.04	1,126	22
23	238.479	204.258	875.368	74.136	949.504	1153.762	1.1943	.057812	17.30	1,080	23
24	237.803	206.610	873.538	74.323	947.861	1154.471	1.1950	.060171	16.62	1,038	24
25	240.053	208.887	871.767	74.503	946.270	1155.157	1.1957	.062524	16.00	998.4	25
26	242.225	211.089	870.052	74.678	944.730	1155.819	1.1964	.064870	15.42	962.3	26
27	244.333	213.223	868.391	74.847	943.238	1156.461	1.1971	.067210	14.88	928.8	27
28	246.376	215.293	866.780	79.011	941 791	1157.084	1.1978	.069545	14.38	897.6	28
29	248.363	217.308	865.215	75.168	940.383	1157.691	1.1984	.071875	13.91	868.5	29
30	250.293	219.261	863.700	75.319	939.019	1158.280	1.1990	.074201	13.48	841.3	30
31	252.171	221.165	862.221	75.466	937.687	1158.852	1.1996	.076522	13.07	815.8	31
32	254.002	223.021	860.781	75.608	936.389	1159.410	1.2002	.078839	12.68	791.8	32
33	255.782	224.827	859.382	75.745	935.127	1159.954	1.2008	.081152	12.32	769.2	33
34	257.523	226.594	858.013	75.878	933.891	1160.485	1.2013	.083461	11.98	748.0	34
35	259.221	228.316	856.680	76.007	932.687	1161.003	1.2018	.085766	11.66	727.9	35
36	260.883	230.001	855.375	76.133	931.508	1161.509	1.2023	.088067	11.36	708.8	36
37	262.505	231.650	854.099	76.255	930.354	1162.004	1.2028	.090364	11.07	690.8	37
38	264.093	233.261	852.852	76.375	929.227	1162.488	1.2033	.092657	10.79	673.7	38
39	265.647	234.840	851.629	76 493	928.122	1162.962	1.2038	.094946	10.53	657.5	39
40	267 168	236.386	850.432	76.608	927.040	1163.426	1.2043	.097231	10.28	642.0	40
41	268.660	237.902	849.261	76.719	925.980	1163.882	1.2048	.099514	10.05	627.3	41
42	270.122	239.389	848.113	76.827	924.940	1164.329	1.2053	.101794	9.826	613.3	42
43	271.557	2,0.846	846.988	76 932	923.920	1164.766	1.2058	.104071	9.609	599.9	43
44	272.965	242.275	845.884	77.035	922.919	1165.194	1.2062	.106345	9.403	587.0	44
45	274.347	243.680	844.709	77.136	921.935	1165.615	1.2066	.108616	9.207	574.7	45
46	275.704	245.061	843.733	77.235	920.968	1166.029	1.2070	.110884	9.018	563.0	46
47	277.036	246.418	842.687	77.331	920.018	1166.436	1.2074	.113149	8.838	551.7	47
48	278.348	247.752	841.659	77.425	919.084	1166.836	1.2078	.115411	8.665	540.9	48
49	279.637	249.064	840.647	77.517	918.164	1167.228	1.2082	.117670	8.498	530.5	49
50	280.904	250.355	839.653	77.607	917.260	1167.615	1.2086	.119927	8.338	520.5	50
51	282.151	251.624	838.675	77.696	916.371	1167.995	1.2090	.122181	8.185	510.9	51
52	283.381	252.875	837.710	77.784	915.494	1168.369	1.2094	.124433	8.037	501.7	52
53	284.589	254.106	836.762	77.870	914.632	1168.738	1.2098	.126682	7.894	492.8	53
54	285.781	255.321	835.827	77.954	913.781	1169.102	1.2102	.128928	7.756	484.2	54
55	286.955	256.518	834.906	78.036	912.942	1169.460	1.2106	.131172	7.624	475.9	55
56	288.111	257.695	834.001	78.117	912.118	1169.813	1.2110	.133414	7.496	467.9	56
57	289.251	258.857	833.108	78.196	911.304	1170.161	1.2114	.135654	7.372	460.2	57

PROPERTIES OF SATURATED STEAM—(*Continued*).

Pressure above a vacuum, in pounds per square inch.	Temperature, Fahrenheit degrees.	Quantities of Heat. In British Thermal Units. Required to raise the temperature of the water from 32° to T°.	Internal latent heat.	External latent heat.	Latent heat of evaporation at pressure P $= I + E$.	Total heat of evaporation above 32° $= S + L$.	Total heat of evaporation above 32°, in units of evaporation.	Weight of a cubic foot of steam, in pounds.	Volume. Of a pound of steam in cubic feet.	Volume. Ratio of volume of steam to volume of equal weight of distilled water at temperature of maximum density.	Pressure above a vacuum, in pounds per square inch.
p	t	q or S	ρ or I	APu or E	r or L	λ or H	U	δ or W	v or C	V	p
58	290.374	260.002	832.228	78.273	910.501	1170.503	1.2117	.137892	7.252	452.7	58
59	291.483	261.132	831.361	78.348	909.709	1170.841	1.2120	.140128	7.136	445.5	59
60	292.575	262.248	830.507	78.421	908.928	1171.176	1.2123	.142362	7.024	438.5	60
61	293.653	263.348	829.663	78.494	908.157	1171.505	1.2127	.144594	6.916	431.7	61
62	294.717	264.433	828.830	78.566	907.396	1171.829	1.2130	.146824	6.811	425.1	62
63	295.768	265.506	828.005	78.638	906.643	1172.149	1.2133	.149052	6.709	418.8	63
64	296.805	266.566	827.191	78.709	905.900	1172.466	1.2136	.151277	6.610	412.6	64
65	297.830	267.612	826.388	78.779	905.167	1172.779	1.2140	.153500	6.515	406.6	65
66	298.842	268.644	825.596	78.847	904.443	1173.087	1.2143	.155721	6.422	400.8	66
67	299.843	269.666	824.814	78.913	903.727	1173.393	1.2146	.157940	6.332	395.2	67
68	300.831	270.674	824.042	78.978	903.020	1173.694	1.2149	.160157	6.244	389.8	68
69	301.807	271.669	823.280	79.042	902.322	1173.991	1.2152	.162372	6.159	384.5	69
70	302.774	272.657	822.524	79.105	901.629	1174.286	1.2155	.164584	6.076	379.3	70
71	303.728	273.633	821.778	79.167	900.945	1174.578	1.2158	.166794	5.995	374.3	71
72	304.669	274.597	821.041	79.228	900.269	1174.866	1.2161	.169003	5.917	369.4	72
73	305.603	275.550	820.312	79.288	899.600	1175.150	1.2164	.171210	5.841	364.6	73
74	306.526	276.493	819.589	79.349	898.938	1175.431	1.2167	.173417	5.767	360.0	74
75	307.440	277.427	818.873	79.410	898.283	1175.710	1.2170	.175622	5.694	355.5	75
76	308.344	278.350	818.165	79.469	897.635	1175.985	1.2173	.177825	5.624	351.1	76

ϕ	t	q or S	ρ or I	APu or B	r or L	λ or H	U	δ or W	v or C	V	ϕ
77	309.239	279.265	817.468	79.526	896.994	1176.259	1.2176	.180027	5.555	346.8	77
78	310.123	280.170	816.777	79.582	896.359	1176.529	1.2179	.182229	5.488	342.6	78
79	311.000	281.066	816.090	79.639	895.729	1176.795	1.2181	.184429	5.422	338.5	79
80	311.866	281.952	815.413	79.695	895.108	1177.060	1.2184	.186627	5.358	334.5	80
81	312.725	282.830	814.742	79.749	894.491	1177.321	1.2187	.188823	5.296	330.6	81
82	313.576	283.701	814.077	79.802	893.879	1177.580	1.2190	.191017	5.235	326.8	82
83	314.417	284.562	813.419	79.856	893.275	1177.837	1.2193	.193210	5.176	323.1	83
84	315.250	285.414	812.768	79.909	892.677	1178.091	1.2195	.195401	5.118	319.5	84
85	316.076	286.260	812.122	79.961	892.083	1178.343	1.2198	.197591	5.061	315.9	85
86	316.893	287.096	811.484	80.012	891.496	1178.592	1.2200	.199781	5.006	312.5	86
87	317.705	287.927	810.850	80.063	890.913	1178.840	1.2203	.201969	4.951	309.1	87
88	318.510	288.750	810.222	80.113	890.335	1179.085	1.2205	.204155	4.898	305.8	88
89	319.306	289.565	809.601	80.162	889.763	1179.328	1.2208	.206340	4.846	302.5	89
90	320.094	290.373	808.986	80.210	889.196	1179.569	1.2210	.208525	4.796	299.4	90
91	320.877	291.176	808.375	80.258	888.633	1179.809	1.2212	.210709	4.746	296.3	91
92	321.653	291.970	807.770	80.305	888.075	1180.045	1.2215	.212892	4.697	293.2	92
93	322.422	292.758	807.170	80.351	887.521	1180.279	1.2217	.215074	4.650	290.2	93
94	323.183	293.539	806.575	80.397	886.972	1180.511	1.2220	.217253	4.603	287.3	94
95	323.939	294.314	805.985	80.442	886.427	1180.741	1.2222	.219430	4.557	284.5	95
96	324.688	295.083	805.400	80.487	885.887	1180.970	1.2224	.221604	4.513	281.7	96
97	325.431	295.845	804.821	80.531	885.352	1181.197	1.2227	.223778	4.469	279.0	97
98	326.169	296.601	804.245	80.576	884.821	1181.422	1.2229	.225950	4.426	276.3	98
99	326.900	297.350	803.675	80.620	884.295	1181.645	1.2232	.228122	4.384	273.7	99
100	327.625	298.093	803.108	80.665	883.773	1181.866	1.2234	.230293	4.342	271.1	100
101	328.345	298.832	802.544	80.709	883.253	1182.085	1.2236	.232464	4.302	268.5	101
102	329.060	299.566	801.985	80.752	882.737	1182.303	1.2238	.234634	4.262	266.0	102
103	329.769	300.293	801.432	80.794	882.226	1182.519	1.2240	.236803	4.223	263.6	103
104	330.471	301.014	800.884	80.835	881.719	1182.733	1.2242	.238972	4.185	261.2	104
105	331.169	301.731	800.339	80.875	881.214	1182.945	1.2245	.241139	4.147	258.9	105
106	331.862	302.444	799.796	80.916	880.712	1183.156	1.2247	.243304	4.110	256.6	106
107	332.550	303.152	799.258	80.956	880.214	1183.366	1.2249	.245467	4.074	254.3	107
108	333.232	303.854	798.725	80.995	879.720	1183.574	1.2251	.247629	4.038	252.1	108
109	333.911	304.551	798.196	81.034	879.230	1183.781	1.2254	.249789	4.003	249.9	109
110	334.582	305.242	797.672	81.072	878.744	1183.986	1.2256	.251947	3.969	247.8	110
111	335.250	305.927	797.153	81.110	878.263	1184.190	1.2258	.254105	3.935	245 7	111
112	335.914	306.609	796.637	81.147	877.784	1184.393	1.2260	.256263	3.902	243.6	112
113	336.573	307.285	796.125	81.184	877.309	1184.594	1.2262	.258420	3.870	241.6	113
114	337.226	307.956	795.617	81.221	876.838	1184.794	1.2264	.260576	3.838	239.6	114
115	337.874	308.621	795.114	81.257	876.371	1184.992	1.2266	.262732	3.806	237.6	115
116	338.518	309.281	794.614	81.293	875.907	1185.188	1.2268	.264887	3.775	235.7	116
117	339.159	309.939	794.114	81.330	875.444	1185.383	1.2270	.267041	3.745	233.8	117

PROPERTIES OF SATURATED STEAM—*(Continued)*.

Pressure above a vacuum, in pounds per square inch.	Temperature, Fahrenheit degrees.	Quantities of Heat. In British Thermal Units. Required to raise the temperature of the water from 32° to $T°$.	Internal latent heat.	External latent heat.	Latent heat of evaporation at pressure $P = I + E$.	Total heat of evaporation above 32° $= S + L$.	Total heat of evaporation above 32°, in units of evaporation.	Weight of a cubic foot of steam, in pounds.	Volume. Of a pound of steam in cubic feet.	Volume. Ratio of volume of steam to volume of equal weight of distilled water at temperature of maximum density.	Pressure above a vacuum, in pounds per square inch.
p	t	q or S	ρ or I	APu or E	r or L	λ or H	U	δ or W	v or C	V	p
118	339.796	310.592	793.619	81.366	874.985	1185.577	1.2272	.269195	3.715	231.9	118
119	340.430	311.241	793.126	81.403	874.529	1185.770	1.2274	.271348	3.685	230.1	119
120	341.058	311.885	792.637	81.439	874.076	1185.961	1.2276	.273500	3.656	228.3	120
121	341.681	312.524	792.152	81.474	873.626	1186.150	1.2278	.275651	3.628	226.5	121
122	342.300	313.161	791.669	81.509	873.178	1186.339	1.2280	.277801	3.600	224.7	122
123	342.916	313.795	791.189	81.543	872.732	1186.527	1.2282	.279949	3.572	223.0	123
124	343.528	314.425	790.711	81.578	872.289	1186.714	1.2284	.282097	3.545	221.3	124
125	344.136	315.051	790.236	81.612	871.848	1186.899	1.2286	.284243	3.518	219.6	125
126	344.741	315.672	789.765	81.646	871.411	1187.083	1.2288	.286389	3.492	218.0	126
127	345.340	316.289	789.298	81.679	870.977	1187.266	1.2290	.288533	3.466	216.4	127
128	345.936	316.903	788.834	81.711	870.545	1187.448	1.2292	.290677	3.440	214.8	128
129	346.530	317.513	788.374	81.742	870.116	1187.629	1.2293	.292820	3.415	213.2	129
130	347.121	318.121	787.914	81.774	869.688	1187.809	1.2295	.294961	3.390	211.6	130
131	347.706	318.725	787.458	81.805	869.263	1187.988	1.2296	.297102	3.366	210.1	131
132	348.287	319.325	787.004	81.837	868.841	1188.166	1.2298	.299242	3.342	208.6	132
133	348.867	319.922	786.554	81.868	868.422	1188.344	1.2300	.301382	3.318	207.1	133
134	349.443	320.515	786.105	81.900	868.005	1188.520	1.2302	.303521	3.295	205.7	134
135	350.015	321.105	785.659	81.931	867.590	1188.695	1.2304	.305659	3.272	204.2	135
136	350.584	321.692	785.215	81.962	867.177	1188.869	1.2306	.307797	3.249	202.8	136
137	351.149	322.274	784.775	81.992	866.767	1189.041	1.2308	.309934	3.227	201.4	137
138	351.711	322.853	784.339	82.021	866.360	1189.213	1.2309	.312070	3.204	200.0	138

p	t	q or S	ρ or I	APu or E	r or L	λ or H	U	δ or W	v or C	V	p
139	352.271	323.429	783.905	82.050	865.955	1189.384	1.2311	.314205	3.182	198.7	139
140	352.827	324.003	783.472	82.080	865.552	1189.555	1.2313	.316338	3.161	197.3	140
141	353.380	324.573	783.042	82.109	865.151	1189.724	1.2315	.318471	3.140	196.0	141
142	353.931	325.141	782.613	82.138	864.751	1189.892	1.2316	.320603	3.119	194.7	142
143	354.478	325.705	782.188	82.166	864.354	1190.059	1.2318	.322735	3.099	193.4	143
144	355.022	326.265	781.766	82.194	863.960	1190.225	1.2320	.324867	3.078	192.2	144
145	355.562	326.823	781.346	82.221	863.567	1190.390	1.2321	.326998	3.058	190.9	145
146	356.100	327.378	780.927	82.249	863.176	1190.554	1.2323	.329128	3.038	189.7	146
147	356.636	327.930	780.510	82.277	862.787	1190.717	1.2324	.331257	3.019	188.5	147
148	357.169	328.479	780.096	82.304	862.400	1190.879	1.2326	.333386	3.000	187.3	148
149	357.697	329.024	779.684	82.332	862.016	1191.040	1.2328	.335515	2.981	186.1	149
150	358.223	329.566	779.275	82.359	861.634	1191.200	1.2330	.337643	2.962	184.9	150
160	363.345	334.850	775.296	82.616	857.912	1192.762	1.2346	.358886	2.786	173.9	160
170	368.226	339.892	771.505	82.854	854.359	1194.251	1.2361	.380071	2.631	164.3	170
180	372.886	344.708	767.891	83.072	850.963	1195.671	1.2376	.401201	2.493	155.6	180
190	377.352	349.329	764.430	83.273	847.703	1197.032	1.2390	.422280	2.368	147.8	190
200	381.636	353.766	761.111	83.462	844.573	1198.339	1.2404	.443310	2.256	140.8	200
210	385.759	358.041	757.916	83.640	841.556	1199.597	1.2417	.464295	2.154	134.5	210
220	389.736	362.168	754.834	83.808	838.642	1200.810	1.2430	.485237	2.061	128.7	220
230	393.575	366.152	751.862	83.966	835.828	1201.980	1.2442	.506139	1.976	123.3	230
240	397.285	370.008	748.988	84.115	833.103	1203.111	1.2454	.527003	1.898	118.5	240
250	400.883	373.750	746.203	84.256	830.459	1204.209	1.2465	.547831	1.825	114.0	250
260	404.370	377.377	743.508	84.388	827.896	1205.273	1.2476	.568626	1.759	109.8	260
270	407.755	380.905	740.891	84.510	825.401	1206.306	1.2487	.589390	1.697	105.9	270
280	411.048	384.337	738.350	84.623	822.973	1207.310	1.2497	.610124	1.639	102.3	280
290	414.250	387.677	735.878	84.731	820 609	1208.286	1.2507	.630829	1.585	99.0	290
300	417.371	390.933	733.470	84.835	818.305	1209.238	1.2517	.651506	1.535	95.8	300
350	431.96	406.26	722.20	85.28	807.48	1213.74	1.256	.754534	1.325	82.7	350
400	444.92	419.76	712.34	85.60	797.94	1217.70	1.260	.857185	1.167	72.8	400
450	456.62	432.18	703.28	85.84	789.12	1221.30	1.264	.959536	1.042	65.1	450
500	467.42	443.52	695.01	86.01	781.02	1224.54	1.267	1.061700	.942	58.8	500
550	477.50	454.14	687.34	86.12	773.46	1227.60	1.270	1.16380	.859	53.6	550
600	486.86	464.22	680.08	86.18	766.26	1230.48	1.273	1.26586	.790	49.3	600
650	495.68	473.58	673.40	86.20	759.60	1233.18	1.276	1.36791	.731	45.6	650
700	504.14	482.40	667.11	86.19	753.30	1235.70	1.279	1.46995	.680	42.4	700
750	512.06	490.86	661.04	86.14	747.18	1238.04	1.282	1.57108	.636	39.6	750
800	519.62	498.88	665.34	86.08	741.42	1240.30	1.285	1.67401	.597	37.1	800
850	526.82	506.66	649.84	86.00	735.84	1242.50	1.287	1.77603	.563	34.9	850
900	533.66	514.03	644.71	85.91	730.62	1244.65	1.289	1.87804	.532	33.0	900
950	540.32	521.30	639.60	85.80	725.40	1246.70	1.291	1.98004	.505	31.4	950
1000	546.80	528.30	634.68	85.68	720.36	1248.66	1.293	2 08203	.480	30.0	1000

TABLE IX.*—SATURATED STEAM AND ENTROPY TABLES.

Temperature, Degrees Fahrenheit. t	Pressure, Pounds per square inch. p	Quantities of Heat in B.T.U.					Entropy.		Volume and Weight.	
		Heat of the Liquid. q	Heat of Vaporization. $=L+E$	Heat Equivalent of Internal Work. P or I	Heat Equivalent of External Work. Apu or E	Total Heat of Evaporation above 32° F.$=q+L$. λ or H	Entropy of the Liquid. θ	Entropy of Vaporization ϕ	Specific Volume, Cu. Ft. per Pound. V	Density Pounds per Cubic Foot. $1/V$
32	0.0886	0.0	1071.7	1017.5	54.2	1071.7	0.0000	2.1804	3308	0.000302
42	0.1315	10.1	1066.6	1011.3	55.3	1076.7	0.0203	2.1267	2272	0.000440
52	0.1918	20.1	1061.3	1005.0	56.3	1081.4	0.0401	2.0748	1586	0.000630
62	0.2750	30.1	1056.0	998.6	57.4	1086.1	0.0594	2.0249	1128	0.000887
72	0.3879	40.1	1050.7	992.3	58.4	1090.8	0.0784	1.9769	813	0.001230
82	0.5395	50.1	1045.4	985.9	59.5	1095.5	0.0971	1.9306	596	0.001678
92	0.7408	60.1	1040.1	979.6	60.5	1100.1	0.1153	1.8859	442.0	0.002262
101.84	1	69.8	1034.7	973.1	61.6	1104.5	0.1329	1.8433	333.1	0.00300
116.0	1.509	83.9	1026.7	963.6	63.1	1110.6	0.1577	1.7838	225.75	0.004430
126.15	2	94.2	1021.9	957.8	64.1	1116.1	0.1753	1.7432	173.1	0.00578
135.0	2.533	102.9	1016	950.8	65.2	1118.9	0.1901	1.7087	138.7	0.00720
141.52	3	109.6	1012.2	946.4	65.8	1121.8	0.2011	1.6841	118.4	0.00845
153.00	4	121.0	1005.5	938.6	66.9	1126.5	0.2200	1.6416	90.4	0.01106
162.26	5	130.3	1000.0	932.1	67.9	1130.3	0.2351	1.6084	73.3	0.01364
170.07	6	138.1	995.5	926.8	68.7	1133.6	0.2476	1.5812	61.9	0.01616
176.84	7	144.9	991.4	922.0	69.4	1136.3	0.2583	1.5580	53.6	0.01866
182.86	8	150.9	987.8	917.8	70.0	1138.7	0.2678	1.5378	47.26	0.02116
188.27	9	156.4	984.5	914.0	70.5	1140.9	0.2762	1.5198	42.36	0.02362
193.21	10	161.3	981.4	910.4	71.0	1142.7	0.2838	1.5036	38.37	0.02606
197.74	11	165.9	978.6	907.1	71.5	1144.5	0.2908	1.4889	35.11	0.02848
201.95	12	170.1	976.0	904.1	71.9	1146.1	0.2972	1.4756	32.40	0.03088
205.87	13	174.1	973.6	901.3	72.3	1147.7	0.3032	1.4632	30.06	0.03327
209.55	14	177.8	971.2	898.6	72.6	1149.0	0.3088	1.4516	28.03	0.03567
212	14.7	180.3	969.7	896.9	72.8	1150.0	0.3125	1.4441	26.78	0.03734
213.03	15	181.3	969.1	896.2	72.9	1150.4	0.3140	1.4409	26.28	0.03805
216.31	16	184.6	967.0	893.8	73.2	1151.6	0.3189	1.4308	24.74	0.04042
219.43	17	187.8	965.0	891.5	73.5	1152.8	0.3236	1.4213	23.38	0.04277
222.40	18	190.8	963.1	889.3	73.8	1153.9	0.3280	1.4123	22.17	0.04511
225.24	19	193.7	961.2	887.2	74.0	1154.9	0.3322	1.4038	21.07	0.04746
227.95	20	196.4	959.4	885.1	74.3	1155.8	0.3362	1.3957	20.09	0.04978
230.56	21	199.1	957.7	883.1	74.6	1156.8	0.3401	1.3879	19.19	0.0521
233.07	22	201.6	956.0	881.2	74.8	1157.6	0.3438	1.3804	18.37	0.0544

235.50	23	204.1	954.4	879.4	75.0	1158.5	0.3473	1.3733	17.62	0.0568
237.82	24	206.4	952.9	877.7	75.2	1159.3	0.3507	1.3665	16.92	0.0591
240.07	25	208.7	951.4	876.0	75.4	1160.1	0.3539	1.3600	16.29	0.0614
242.26	26	210.9	949.9	874.4	75.5	1160.8	0.3571	1.3536	15.70	0.0637
244.36	27	213	948.5	872.8	75.7	1161.5	0.3601	1.3475	15.17	0.0659
246.41	28	215.1	947.1	871.2	75.9	1162.2	0.3631	1.3417	14.67	0.0682
248.41	29	217.2	945.8	869.7	76.1	1163.0	0.3660	1.3360	14.19	0.0705
250.34	30	219.1	944.4	868.2	76.2	1163.5	0.3687	1.3305	13.74	0.0728
254.05	32	222.9	941.8	865.2	76.6	1164.7	0.3740	1.3200	12.93	0.0773
257.59	34	226.5	939.4	862.5	76.9	1165.9	0.3791	1.3101	12.21	0.0819
260.96	36	229.9	937.1	859.9	77.2	1167.0	0.3838	1.3007	11.58	0.0864
264.17	38	233.2	934.8	857.4	77.4	1168.0	0.3883	1.2918	11.01	0.0908
267.26	40	236.4	932.6	855.0	77.6	1169.0	0.3927	1.2833	10.49	0.0953
270.23	42	239.4	930.6	852.7	77.9	1170.0	0.3968	1.2752	10.02	0.0998
273.07	44	242.3	928.5	850.4	78.1	1170.8	0.4008	1.2675	9.589	0.1043
275.82	46	245.1	926.6	848.2	78.4	1171.7	0.4046	1.2601	9.195	0.1087
278.47	48	247.8	924.7	846.2	78.5	1172.5	0.4083	1.2530	8.838	0.1131
281.03	50	250.4	922.8	844.1	78.7	1173.2	0.4119	1.2462	8.507	0.1176
283.52	52	253.0	921.0	842.1	78.9	1174.0	0.4153	1.2395	8.198	0.1220
285.93	54	255.4	919.3	840.2	79.1	1174.7	0.4186	1.2332	7.912	0.1264
288.25	56	257.8	917.6	838.3	79.3	1175.4	0.4218	1.2271	7.647	0.1308
290.53	58	260.1	915.9	836.5	79.4	1176.0	0.4249	1.2211	7.397	0.1352
292.74	60	262.4	914.3	834.7	79.6	1176.7	0.4279	1.2154	7.166	0.1395
298.00	65	267.8	910.4	830.4	80.0	1178.2	0.4351	1.2018	6.647	0.1504
302.96	70	272.9	906.6	826.3	80.3	1179.5	0.4418	1.1892	6.199	0.1613
307.64	75	277.7	903.1	822.4	80.7	1180.8	0.4480	1.1772	5.807	0.1722
312.08	80	282.2	899.8	818.9	80.9	1182.0	0.4540	1.1661	5.466	0.1829
316.30	85	286.5	896.6	815.4	81.2	1183.1	0.4595	1.1557	5.161	0.1938
320.32	90	290.7	893.5	812.1	81.4	1184.2	0.4649	1.1457	4.886	0.2047
324.16	95	294.6	890.5	808.8	81.7	1185.1	0.4699	1.1363	4.644	0.2153
327.86	100	298.5	887.6	805.7	81.9	1186.1	0.4748	1.1273	4.432	0.2256
331.42	105	302.1	884.8	802.7	82.1	1186.9	0.4794	1.1187	4.233	0.2362
334.83	110	305.6	882.1	799.7	82.4	1187.7	0.4838	1.1105	4.047	0.2471
338.14	115	309.0	879.5	797.0	82.5	1188.5	0.4881	1.1026	3.876	0.2580
341.31	120	312.3	876.9	794.2	82.7	1189.2	0.4922	1.0951	3.723	0.2686
344.39	125	315.5	874.5	791.6	82.9	1190.0	0.4962	1.0878	3.581	0.2793
347.38	130	318.6	872.1	789.0	83.1	1190.7	0.5000	1.0808	3.451	0.2898
350.27	135	321.5	869.8	786.5	83.3	1191.3	0.5037	1.0741	3.331	0.3002
353.09	140	324.4	867.4	784.0	83.4	1191.8	0.5073	1.0675	1.221	0.3106

* Abstracted from Peabody's latest tables.

X.

MEAN PRESSURES FOR VARIOUS METHODS OF EXPANSION.

Values of $\frac{p_m}{p_1}$. Adiabatic Expansion of Steam

Ratio of Expansion.	Cut-off, $\frac{1}{r}$.	Percentage of Steam and Value of n.							
		100 1.135	90 1.125	80 1.115	76 1.111	70 1.105	60 1.095	50 1.085	100 1.333
2	$\frac{1}{2}$	.829	.831	.833	.834	.835	.836	.837	.810
$2\frac{1}{4}$	$\frac{4}{9}$	.785	.787	.788	.789	.790	.791	.793	.754
$2\frac{1}{2}$	$\frac{2}{5}$	.744	.746	.747	.748	.749	.750	.751	.714
$2\frac{3}{4}$	$\frac{4}{11}$	.707	.708	.710	.711	.712	.713	.714	.675
3	$\frac{1}{3}$	.675	.676	.677	.678	.679	.681	.683	.639
$3\frac{1}{4}$	$\frac{4}{13}$	.644	.645	.647	.468	.649	.650	.652	.606
$3\frac{1}{3}$	$\frac{3}{10}$	.633	.635	.636	.637	.639	.641	.643	.600
$3\frac{1}{2}$	$\frac{2}{7}$	.616	.618	.619	.620	.622	.624	.626	.576
$3\frac{3}{4}$	$\frac{4}{15}$	.591	.592	.593	.594	.595	.596	.598	.552
4	$\frac{1}{4}$	.567	.568	.570	.572	.573	.574	.576	.523
$4\frac{1}{2}$	$\frac{2}{9}$	.525	.527	.528	.530	.531	.533	.534	.486
5	$\frac{1}{5}$	.488	.491	.493	.494	.496	.498	.500	.447
$5\frac{1}{2}$	$\frac{2}{11}$	.458	.460	.462	.463	.465	.467	.470	.417
6	$\frac{1}{6}$	.432	.434	.435	.437	.439	.441	.443	.390
$6\frac{1}{2}$	$\frac{2}{13}$	.409	.410	.411	.413	.415	.417	.420	.369
7	$\frac{1}{7}$	.387	.390	.392	.394	.400	.403	.405	.345
8	$\frac{1}{8}$	.355	.356	.357	.358	.360	.361	.363	.312
10	$\frac{1}{10}$	.298	.300	.302	.303	.304	.305	.308	.263
20	$\frac{1}{20}$	.170	.173	.175	.177	.178	.180	.182	.144
50	$\frac{1}{50}$	.080	.082	.083	.084	.084	.085	.086	.063
100	$\frac{1}{100}$	.044	.045	.045	.046	.046	.047	.048	.034

XI.

MEAN PRESSURES FOR VARIOUS METHODS OF EXPANSION.

Values of $\frac{p_m}{p_1}$ for Steam, Air Gas, and Mixtures.

Ratio of Expansion, r.	Point of Cut-off, $\frac{1}{r}$.	Steam Expanding, Dry and Saturated, n, 1.046.	Moist Air in Compressors, n, 1.20.	Steam and Leakage, Actual Engines.		Gas and Vapor in Gas-engine, n, 1.60.	Gases.	
				n, 0.50.	n, 0.75.		Isothermal, n, 1.00.	Adiabatic, n, 1.41.
2	$\frac{1}{2}$	.841	.825	.914	.875	.783	.846	.801
2¼	$\frac{4}{9}$	.793	.787	.888	.844	.733	.804	.753
2½	$\frac{2}{5}$	.760	.745	.866	.800	.683	.765	.707
2¾	$\frac{4}{11}$	.717	.700	.846	.785	.638	.731	.668
3	$\frac{1}{3}$	.695	.665	.824	.752	.598	.690	.638
3¼	$\frac{4}{13}$	.665	.635	.802	.732	.578	.670	.596
3½	$\frac{2}{7}$	.652	.625	.796	.716	.568	.661	.588
3½	$\frac{2}{7}$	.632	.605	.782	.704	.548	.642	.568
3¾	$\frac{4}{15}$	.608	.580	.775	.684	.515	.616	.538
4	$\frac{1}{4}$	.587	.550	.750	.664	.486	.566	.518
4½	$\frac{2}{9}$	.540	.510	.720	.624	.441	.555	.473
5	$\frac{1}{5}$	.510	.482	.695	.600	.406	.522	.428
5½	$\frac{2}{11}$	.478	.455	.674	.560	.371	.492	.406
6	$\frac{1}{6}$	.454	.420	.650	.530	.349	.465	.378
6½	$\frac{2}{13}$	.430	.390	.632	.515	.326	.441	.358
7	$\frac{1}{7}$	.409	.375	.612	.500	.303	.421	.337
8	$\frac{1}{8}$	.372	.340	.697	.468	.276	.385	.302
10	$\frac{1}{10}$	.326	.284	.532	.412	.225	.330	.253
20	$\frac{1}{20}$	.192	.165	.396	.272	.103	.200	.138
50	$\frac{1}{50}$	.091	.074	.245	.193	.050	.098	.060
100	$\frac{1}{100}$	.053	.040	.180	.134	.025	.056	.032

XII.

MEAN PRESSURE RATIOS.

r	A	B	C	r	A	B	C	r	A	B	C	r	A	B	C
1.0	1.000	1.000	1.000	5.3	.478	.503	.488	9.6	.312	.340	.324	17.8	.194	.218	.204
1.1	.996	.996	.996	5.4	.472	.497	.482	9.7	.310	.338	.322	18.0	.192	.216	.202
1.2	.983	.983	.983	5.5	.467	.492	477	9.8	.307	.335	.319	18.2	.190	.215	.200
1.3	.966	.968	.967	5.6	.461	.486	.471	9.9	.305	.333	.317	18.4	.189	.214	.199
1.4	.947	.952	.950	5.7	.456	.481	.466	10.0	.303	.330	.314	18.6	.187	.212	.197
1.5	.928	.934	.931	5.8	.450	.475	.460	10.2	.299	.325	.310	18.8	.185	.210	.195
1.6	.910	.919	.914	5.9	.445	.470	.455	10.4	.295	.321	.306	19.0	.183	.208	.193
1.7	.890	.900	.895	6.0	.440	.465	.450	10.6	.291	.317	.302	19.2	.182	.207	.192
1.8	.870	.880	.875	6.1	.434	.460	.445	10.8	.287	.313	.298	19.4	.180	.205	.190
1.9	.850	.862	.856	6.2	.429	.455	.440	11.0	.283	.309	.294	19.6	.179	.204	.189
2.0	.833	.846	.840	6.3	.424	.450	.435	11.2	.279	.305	.290	19.8	.178	.202	.187
2.1	.817	.830	.824	6.4	.419	.445	.430	11.4	.275	.301	.286	20.0	.177	.200	.186
2.2	.798	.812	.805	6.5	.414	.441	.426	11.6	.272	.298	.283	20.2	.173	.198	.184
2.3	.780	.795	.787	6.6	.409	.436	.421	11.8	.268	.294	.279	20.4	.174	.196	.183
2.4	.763	.780	.771	6.7	.405	.432	.417	12.0	.264	.290	.275	20.6	.173	.194	.182
2.5	.748	.766	.756	6.8	.401	.428	.413	12.2	.261	.287	.272	20.8	.171	.193	.180
2.6	.732	.750	.740	6.9	.396	.424	.408	12.4	.257	.283	.268	21.0	.169	.192	.178
2.7	.718	.736	.726	7.0	.393	.421	.405	12.6	.254	.280	.265	21.2	.168	.191	.177
2.8	.705	.723	.713	7.1	.389	.417	.401	12.8	.251	.277	.262	21.4	.167	.190	.176
2.9	.692	.710	.700	7.2	.385	.413	.397	13.0	.248	.274	.259	21.6	.165	.188	.174
3.0	.680	.699	.688	7.3	.381	.410	.393	13.2	.245	.271	.256	21.8	.164	.187	.173
3.1	.668	.687	.676	7.4	.377	.406	.390	13.4	.242	.268	.253	22.0	.163	.186	.172
3.2	.656	.675	.664	7.5	.373	.402	.386	13.6	.239	.265	.250	22.2	.162	.185	.171
3.3	.645	.664	.653	7.6	.370	.399	.383	13.8	.236	.262	.247	22.4	.161	.184	.170
3.4	.634	.653	.642	7.7	.367	.396	.380	14.0	.234	.260	.245	22.6	.160	.183	.169
3.5	.622	.642	.631	7.8	.363	.392	.376	14.2	.231	.257	.242	22.8	.159	.182	.168
3.6	.612	.632	.621	7.9	.360	.389	.373	14.4	.228	.254	.239	23.0	.158	.180	.167
3.7	.602	.622	.611	8.0	.356	.385	.370	14.6	.225	.251	.236	23.2	.156	.179	.165
3.8	.593	.613	.602	8.1	.353	.382	.367	14.8	.223	.249	.234	23.4	.155	.178	.164
3.9	.584	.604	.593	8.2	.350	.379	.364	15.0	.221	.247	.232	23.6	.154	.177	.163
4.0	.572	.596	.583	8.3	.347	.376	.361	15.2	.219	.245	.230	23.8	.153	.176	.162
4.1	.565	.587	.575	8.4	.344	.373	.358	15.4	.217	.242	.227	24.0	.151	.174	.160
4.2	.556	.578	.566	8.5	.341	.371	.355	15.6	.215	.240	.225	24.2	.150	.173	.159
4.3	.548	.570	.558	8.6	.338	.368	.352	15.8	.213	.238	.223	24.4	.149	.172	.158
4.4	.540	.563	.550	8.7	.335	.364	.349	16.0	.211	.236	.221	24.6	.148	.171	.157
4.5	.532	.555	.542	8.8	.332	.361	.346	16.2	.209	.234	.219	24.8	.147	.170	.156
4.6	.525	.548	.535	8.9	.330	.358	.343	16.4	.207	.232	.217	25.0	.146	.169	.155
4.7	.518	.542	.528	9.0	.327	.355	.340	16.6	.205	.230	.215				
4.8	.511	.535	.521	9.1	.324	.353	.337	16.8	.203	.228	.213				
4.9	.504	.528	.514	9.2	.322	.351	.335	17.0	.201	.226	.211				
5.0	.496	.522	.506	9.3	.320	.348	.332	17.2	.199	.224	.209				
5.1	.490	.515	.500	9.4	.317	.345	.329	17.4	.197	.222	.207				
5.2	.484	.509	.494	9.5	.315	.343	.327	17.6	.195	.220	.205				

Column r, the ratio of expansion $= \frac{v_2}{v_1}$

" A, ratio of mean to initial pressure, $\frac{pm}{p_1} = \frac{10 - 9r^{-\frac{1}{9}}}{r}$ { For dry steam, expanded without gain or loss of heat, in a non-conducting cylinder.

" B, " " " " $\frac{pm}{p_1} = \frac{1 + \text{hyp. log. } r}{r}$ { For damp steam, expanded receiving heat.

" C, " " " " $\frac{pm}{p_1} = \frac{17 - 16r^{-\frac{1}{16}}}{r}$ { For dry steam, expanded receiving heat sufficient to prevent liquefaction.

RULE.—To find the mean pressure exerted throughout the stroke, multiply the initial pressure by the number opposite the ratio of expansion, in the column corresponding with the conditions of expansion. (From Northcott.)

XIII.

TERMINAL PRESSURE RATIOS, $\frac{p_1}{p_2}$.

r	A	B	C	r	A	B	C	r	A	B	C	r	A	B	C
1.0	0.00	0.0	0.00	4.7	5.58	4.7	5.18	8.3	10.5	8.3	9.47	13.8	18.5	13.8	16.2
1.1	1.11	1.1	1.11	4.8	5.70	4.8	5.29	8.4	10.6	8.4	9.59	14.0	18.8	14.0	16.5
1.2	1.22	1.2	1.21	4.9	5.84	4.9	5.41	8.5	10.7	8.5	9.64	14.2	19.1	14.2	16.8
1.3	1.34	1.3	1.32	5.0	5.98	5.0	5.52	8.6	10.9	8.6	9.76	14.4	19.4	14.4	17.0
1.4	1.45	1.4	1.43	5.1	6.11	5.1	5.64	8.7	11.0	8.7	9.88	14.6	19.7	14.6	17.2
1.5	1.57	1.5	1.54	5.2	6.24	5.2	5.76	8.8	11.2	8.8	10.0	14.8	20.0	14.8	17.5
1.6	1.69	1.6	1.65	5.3	6.38	5.3	5.88	8.9	11.3	8.9	10.2	15.0	20.3	15.0	17.8
1.7	1.80	1.7	1.75	5.4	6.51	5.4	6.00	9.0	11.5	9.0	10.3	15.2	20.6	15.2	18.0
1.8	1.92	1.8	1.87	5.5	6.64	5.5	6.12	9.1	11.6	9.1	10.4	15.4	20.9	15.4	18.2
1.9	2.04	1.9	1.98	5.6	6.78	5.6	6.23	9.2	11.8	9.2	10.6	15.6	21.2	15.6	18.5
2.0	2.16	2.0	2.08	5.7	6.91	5.7	6.35	9.3	11.9	9.3	10.7	15.8	21.5	15.8	18.7
2.1	2.28	2.1	2.20	5.8	7.05	5.8	6.47	9.4	12.0	9.4	10.8	16.0	21.8	16.0	19.0
2.2	2.40	2.2	2.31	5.9	7.18	5.9	6.59	9.5	12.2	9.5	10.9	16.2	22.1	16.2	19.3
2.3	2.52	2.3	2.42	6.0	7.32	6.0	6.71	9.6	12.3	9.6	11.0	16.4	22.4	16.4	19.5
2.4	2.64	2.4	2.53	6.1	7.45	6.1	6.83	9.7	12.5	9.7	11.1	16.6	22.7	16.6	19.8
2.5	2.76	2.5	2.64	6.2	7.59	6.2	6.95	9.8	12.6	9.8	11.3	16.8	23.0	14.8	20.0
2.6	2.89	2.6	2.76	6.3	7.73	6.3	7.07	9.9	12.8	9.9	11.4	17.0	23.3	17.0	20.3
2.7	3.01	2.7	2.87	6.4	7.86	6.4	7.18	10.0	12.9	10.0	11.5	17.2	23.6	17.2	20.5
2.8	3.14	2.8	2.99	6.5	8.00	6.5	7.30	10.2	13.2	10.2	11.7	17.4	23.9	17.4	20.8
2.9	3.26	2.9	3.10	6.6	8.14	6.6	7.42	10.4	13.5	10.4	12.0	17.6	24.2	17.6	21.0
3.0	3.39	3.0	3.21	6.7	8.27	6.7	7.54	10.6	13.8	10.6	12.3	17.8	24.5	17.8	21.3
3.1	3.51	3.1	3.32	6.8	8.41	6.8	7.66	10.8	14.1	10.8	12.5	18.0	24.8	18.0	21.6
3.2	3.64	3.2	3.43	6.9	8.55	6.9	7.78	11.0	14.3	11.0	12.8	18.2	25.1	18.2	21.8
3.3	3.77	3.3	3.55	7.0	8.69	7.0	7.90	11.2	14.6	11.2	13.0	18.4	25.4	18.4	22.0
3.4	3.89	3.4	3.67	7.1	8.83	7.1	8.02	11.4	14.9	11.4	13.3	18.6	25.7	18.6	22.3
3.5	4.02	3.5	3.79	7.2	8.96	7.2	8.14	11.6	15.2	11.6	13.5	18.8	26.0	18.8	22.5
3.6	4.15	3.6	3.90	7.3	9.10	7.3	8.27	11.8	15.5	11.8	13.7	19.0	26.3	19.0	22.8
3.7	4.28	3.7	4.01	7.4	9.24	7.4	8.38	12.0	15.8	12.0	14.0	19.2	26.6	19.2	23.1
3.8	4.41	3.8	4.13	7.5	9.38	7.5	8.49	12.2	16.1	12.2	14.2	19.4	26.9	19.4	23.3
3.9	4.54	3.9	4.25	7.6	9.52	7.6	8.62	12.4	16.4	12.4	14.5	19.6	27.2	19.6	23.6
4.0	4.66	4.0	4.36	7.7	9.66	7.7	8.74	12.6	16.7	12.6	14.8	19.8	27.5	19.8	23.9
4.1	4.79	4.1	4.47	7.8	9.80	7.8	8.87	12.8	17.0	12.8	15.0	20.0	27.9	20.0	24.1
4.2	4.91	4.2	4.60	7.9	9.94	7.9	8.99	13.0	17.3	13.0	15.2	21.0	29.5	21.0	25.4
4.3	5.05	4.3	4.71	8.0	10.1	8.0	9.11	13.2	17.6	13.2	15.5	22.0	31.0	22.2	26.7
4.4	5 18	4.4	4.82	8.1	10.2	8.1	9.23	13.4	17.9	13.4	15.7	23.0	32.6	23.0	28.0
4.5	5.32	4.5	4.95	8.2	10.3	8.2	9.35	13.6	18.2	13.6	16.0	24.0	34.1	24.0	29.3
4.6	5.45	4.6	5.06												

Column r, ratio of expansion $= \frac{v_2}{v_1}$

" A, ratio of initial to final pressure $p_2 = \frac{p_1}{r^{\frac{10}{9}}}$ { For dry steam, expanded without gain or loss of heat in a non-conducting cylinder.

" B, " " " " $p_2 = \frac{p_1}{r}$. { For damp steam, expanded receiving heat.

" C, " " " " $p_2 = \frac{p_1}{r^{\frac{17}{16}}}$ { For dry steam, expanded receiving sufficient heat to prevent liquefaction.

RULE.—To find the final pressure obtaining with any ratio of expansion, divide the initial pressure by the number opposite the ratio of expansion, in the column corresponding with the conditions of expansion.

XIV.

FLOW OF STEAM THROUGH PIPES.

LENGTH OF PIPE ONE THOUSAND FEET.

Discharge in Pounds per Minute Corresponding to Drop in Pressure on Right for Pipe Diameters in Inches in Top Line.											Drop in Pressure in Pounds per Square Inch Corresponding to Discharge on Left · Densities and Corresponding Absolute Pressure per Square Inch in First Two Lines.								
Diameter.	12″	10″	8″	6″	4″	3″	2½″	2″	1½″	1″	Density. Pressure.	.208 90	.230 100	.284 125	.328 150	.401 180	.443 200	.506 230	.548 250
Discharge	2328	1443	799	371	123	55.9	28.8	18.1	6.81	2.52	Drop	18.10	16.4	13.3	11.1	9.39	8.50	7.44	6.87
"	2165	1341	742	344	114.6	51.9	27.6	16.8	6.52	2.34	"	15.60	14.1	11.4	9.60	8.09	7.33	6.41	5.92
"	1996	1237	685	318	106	47.9	26.4	15.5	6.24	2.16	"	13.3	12.0	9.74	8.18	6.90	6.24	5.47	5.05
"	1830	1134	628	292	97.0	43.9	25.2	14.2	5.95	1.98	"	11.1	10.0	8.13	6.83	5.76	5.21	4.56	4.21
"	1663	1031	571	265	88.2	39.9	24.0	12.9	5.67	1.80	"	9.25	8.36	6.78	5.69	4.80	4.34	3.80	3.51
"	1580	979	542	252	83.8	37.9	22.8	12.3	5.29	1.71	"	8.33	7.53	6.10	5.13	4.32	3.91	3.42	3.16
"	1497	928	514	239	79.4	35.9	21.5	11.6	5.00	1.62	"	7.48	6.76	5.48	4.60	3.88	3.51	3.07	2.84
"	1414	876	485	226	75	33.9	20.4	10.9	4.72	1.53	"	6.67	6.03	4.88	4.10	3.46	3.13	2.74	2.53
"	1331	825	457	212	70.6	31.9	19.2	10.3	4.43	1.44	"	5.91	5.35	4.33	3.64	3.07	2.78	2.43	2.24
"	1248	873	428	199	66.2	23.9	18.0	9.68	4.15	1.35	"	5.19	4.69	3.80	3.19	2.69	2.44	2.13	1.97
"	1164	722	400	186	61.7	27.9	16.8	9.03	3.86	1.26	"	4.52	4.09	3.31	2.78	2.34	2.12	1.86	1.72
"	1081	670	371	172	57.3	25.9	15.6	8.38	3.68	1.17	"	3.90	3.53	2.86	2.40	2.02	1.83	1.60	1.48
"	998	619	343	159	52.9	23.9	14.4	7.74	3.40	1.08	"	3.32	3.00	2.43	2.04	1.72	1.56	1.36	1.26
"	915	567	314	146	48.5	21.9	13.2	7.10	3 11	0.99	"	2.79	2.52	2.04	1.72	1.45	1.31	1.15	1.06
"	832	516	286	132	44.1	20.0	12.0	6.45	2.83	0.90	"	2.31	2.09	1.69	1.42	1.20	1.08	0.949	0.87
"	748	464	257	119	39.7	18.0	10.8	5.81	2.55	0.81	"	1.87	1.69	1.37	1.15	0.97	0.878	0.769	.710
"	665	412	228	106	35.3	16.0	9.6	5.16	2.26	0.72	"	1.47	1.33	1.08	0.905	0.762	0.690	0.604	.558
"	582	361	200	92.8	30.9	14.0	8.4	4.52	1.98	0.63	"	1.13	1.02	0.828	0.695	0.586	0.531	0.456	.429

To get the pressure drop for lengths other than 1000 feet, multiply by lengths in feet ÷ 1000.

TABLE XV.

SPECIFIC HEAT (C_p) OF SUPERHEATED STEAM AT CONSTANT PRESSURE.

(According to the experiments of Knoblauch and Jacobs.)

Average Pressure, Lbs. per Sq. In. Absolute.	Average Temperature, Degrees Fahrenheit.	Specific Heat, Cp.	Average Pressure, Lbs. per Sq. In. Absolute.	Average Temperature Degrees Fahrenheit.	Specific Heat, Cp.
28.466	300	0.478	85.4	366	0.531
"	370	0.470	"	424	0.500
"	465	0.474	"	500	0.476
"	475	0.474	"	584	0.472
"	566	0.476	"	661	0.490
"	655	0.486	113.86	370	0.554
"	661	0.494	"	464	0.483
56.93	339	0.502	"	563	0.490
"	411	0.472	"	563	0.480
"	501	0.479	"	564	0.491
"	580	0.470	"	653	0.488
"	582	0.414	"	662	0.492
"	578	0.550	"	673	0.499
"	662	0.492			

INDEX.

Absolute zero, 7
  pressure, correct, 267
Absorption, refrigeration by, 531
Accelerated motion, 347, 448
Action of clearance steam, 189
Adheating, 432
Adiabatic compression, 141
  curve, 143
  expansion, 141, ratio of temperatures in, 143
Advance, angle of, 92
Air, and vapor, weights of, Table VI
  composition of, Table IV
  cooling in condensers, 282
  leaks in condensers, 234
  specific heat of, Table I
  thermometer, 6
Air-pump, 23, 269
  action of, 276
  design, 218, 224, 225
  dry, 282
  Edward's, 272
  efficiency, 270
  for surface condenser, 273, 278
  wet, 281
Alcohol, 53
Alden brake, 34
Allen dense-air machine, 531
Ammonia ice-machines, 531
Angles, blade, 454
Angular acceleration, 348
  advance, 92
  displacement, phase degrees, 405
Areas representing heat, 147–153, 208
Astatic, 336
Atmosphere, Table VI
Auxiliaries, measurement of steam used by, 427

Balance wheel, design, 387
Balancing engines, 400–403
Barometric condenser, 236
Barrel calorimeter, 171
Barrus calorimeter, 173
Baumé hydrometer, 524
  degrees converted into specific gravity, 524
Bearing, details of, 17
Belting, 552, 564
Belt wheel, design, 386
Bilgram valve-diagram, 103; geometrical relations of, 107
Blade angles, steam-turbines, 455
Boiler efficiency, 35
  feed-pump, 13, 285, 287, 289
  horse-power, 36
Boiling and evaporation, 128
  in vacuo, 534
Boiling-points of water, Table VIII
Bolts, number and size, 553
Boulvin's temperature-entropy diagram, 221
Boyle's law, 137
Brake horse-power, definition of, 32
Brakes, friction, 32
Bridge, thickness of, 113
British thermal unit, definition of, 5
Buckeye valve-gear, 364

C_p, C_v, for perfect gases, Table I
Calibration of gages, 386, 427
  indicator-springs, 74–76, 502
  thermometers, 8, 419
Calorific power of gases, 476
Calorimeter:
  Barrus continuous water, 173
  Carpenter, 172
  Junker, 506
  Mahler, 506
  normal reading of, 175, 178
  Peabody, 173
  separator, 173
  throttling, 173
  water equivalent of, 176
Carbon, air-burnt, 488
  steam-burnt, 488
Carnot cycle, 154, 228
Centrifugal force, 329; derivation of formula for, 330
Charles' law, 137
Circulating pump, 25, 288, 290
Circulation of water in the boiler, 181
Clearance, definition, 72
  line, 72
  steam, elimination of, 84
  surface, 186
  surface, effect of, 188
  volume, 72, 416

Coal, heating value of, 35
in gas-producers, use of, 490
measurement of, 429
per horse-power-hour, measurement of, 35
standard, thermo value of, 36, 417
Coal-gas, analysis of, 486
heating value of, 489, 490
Column, mercury, 28
Coefficient, heat transmission, 256, 257, 258
Combining indicator-cards, 318
Combustion, heat of, 36, 485
of coal, rate of, 137
temperature arising from, 486
Compound engines:
combining cards of, 317
diagram factor of, 322
distribution of work in, 308, 311, 316
method of laying out the cards for, 304, 311
ratio of expansion in, 306, 320
records made by, 304
size of, to find, 315
theory of, 307
Compound quantities, 2, 4
Compressed-air formulas, theoretical and practical, 142
Compression, and expansion of air, 142
of steam, 188
work done during, 142
Concentration of cane-juice, 527
Condensation in steam-engines, 158
pipes, 182, 186
Condensation at constant volume, 219
initial, 326
Condensers:
barometric, 236
condensing surface in, 241
correct pressure in, 267
design of, 235
dimensions of, 234
ejector, 238
increasing surface efficiency of, 262
jet, 238
pressure in, 28
surface, 23, 239
syphon, 238
transmission of heat in, 243
tubes, of 241
Condensing, gain by, 267
water, 235
Condensing water, coolers for, 265
use of, 233
Connecting-rod: design, 546, 558; division of mass for turning moment, 401; division of mass for shaking forces, 401; effects caused by the obliquity of, 88
Constant heat curve, 224
temperature curve, 213
Constant volume, condensation at, 186
curve, 219, 220
Constants (R) for perfect gases, Table I
Contraflo condenser, 260
Cooling-tower, 265
effect of change of season on operation of, 267
Cork insulation, 183
Corliss engines, 18, 366, 368
Counterbalancing engines, 400, 402
Coverings for steam-pipe, 183
Crank-pin, design, 548, 560
Crank-shaft, turning effort in, 382, 406
Cranks, combination of, 405
throw of, 85
twisting moment in, 382
Critical temperature, 152
Cross compound engines, 311–314
Cross-head pin, design, 550, 562
shoes, 565
Crossed rods, definition, 358
Cross-section paper, logarithmic, use of, 144
Curves:
adiabatic, 141
constant heat, 219
constant volume, 221
general expansion, 139, 143
hyperbolic, 83, 139
isothermal, 78
saturated steam, 78, 213
superheated steam, 441
water-line, 210
Cut-off, actual, 65
commercial, 65
real or actual, 65
Cycle, Beau de Rochas, 481
Carnot, 154, 228
Diesel, 497
Lenoir, 481
Rankine, 228
Cylinders, details of, 201
dimensions, 562
Cylinder walls, thermal action of, 188, 189
thickness of, 112, 553
Cylinder waste, reducing, 435

Degree of reaction, 476
De Laval turbine, 457
Dense-air machine, 531
Design of, see part required
Diagram, Bilgram, 103
compound engine, 308
crank-pin pressure, 382, 406
of effective driving pressure, 382, 406
of shaking forces, 404
of turning moment, 382
Zeuner valve, 93, 94
Diagram factor, compound engines, 266
simple engines, 81

Dimensions of steam ports and pipes, 110, 434, 502, 551, 564
Distillation, 517
Division of mass of connecting-rod for pin pressures, 401; shaking-forces, 401; turning-moment, 401
Double poppet-valves, 371, 451
Dryness of steam, methods of determining, 171
Dry-steam fraction, 193

Eccentric, throw of, 85, 89
  equivalent, 360
  rod, 87, 357
Eccentricity, 85
Economizer, 13
Economy of vacuum production, 264
  ratio of, of an engine to ideal engine, 229
Effects, multiple and single, 517
Efficiencies, combining, 40
  definition of, 35
  gas-engine, 508
  maximum, of jets, 456
  mechanical, 35
Efficiency, of injectors, 297
  of steam-engines, 267
  thermal, 42, 263
Ejector condenser, 322
Electrical units, 32
Elementary quantities, 1, 2, 131
Ellipse, valve, 114
Energy, definition of, 3
  forms of, 4
  kinetic, 3, 331
  potential, 126
  sources of, 14
  transformation of, 4, 126, 378, 456
  ratio of economy of, to an ideal engine, 229
Engines, see kind of
  average steam consumption of, 37
  details of, 17–21
Entropy, chart, 590
  definition of, 207
  derived from indicator-card, 225, 491
  diagram of a real engine, 229
  tables, 575, 582
Equivalent, eccentric, 360
  evaporation, 170
  factors of evaporation, 170
  weight at crank-pin center, 402
Evaporation, factor of, 37
  rate of, in boilers, 36
Evaporation and drying, 129
Evaporation by the multiple system, 517
  latent heat of, 164
  table of, Table VIII
  total heat of, 164
Evaporators, 517
Exhaust-ports, width of, 113
Expansion, adiabatic, 141
  at constant volume, 219, 220
  following the law $PV^n = C$, 139
  hyperbolic, 77
  of water, 163
  of water when heated, 163
  proper ratio of, 325
  real ratio of, 72
  valve, Meyer, 370
External work in adiabatic expansion, 142, 215
  in isothermal expansion, 79, 213

Factors of evaporation, 170
Feed-pump, 73, 285, 287, 289
Feed-water heaters, 248
  choice of, 250
  closed, 251
  heating surface of, 256, 257
  open, 251
  percentage of gain in, 253
  versus economizers, 254
  measuring, 427
Flanges, 553
Flow of air, in pipes, 117
  through orifices, 447
Flow of steam through pipes, 117
Fly-wheels:
  accurate weight of, 407, 555, 565
  approximate weight of, 384
Foaming, cause and prevention, 181
  definition of, 180
Force, centrifugal, 330
  exerted by a deflected stream, 449
  moment of, 2
  required to produce acceleration, 347
Form, steam-engine tests, 537
Formula for:
  adiabatic expansion, 141
  Barrus calorimeter, 173
  calorimeter correction, 175, 178
  Carpenter calorimeter, 172
  centrifugal force, 330
  energy of reciprocating parts, 379–381
  fly-wheels, 385, 407
  heat to produce wet steam, 169
  I. H. P. of an engine, 31
  impulse from jets, 449, 453, 456
  Peabody calorimeter, 177
  perfect gases, 135, 142, 148, 153
  revolving pendulum governor, 332
  Rites governor, 349, 386
  shaft governors, 341
  steam velocity in nozzles, 216
  superheated steam, 437
  the total heat of evaporation, 165
  turning force and moment, 2
  weight of steam accounted for by the indicator, 193
Friction brakes, 32, 34
Friction of elbows, valves, pipes, 118

Friction of a governor, 339
of air in pipes, 118
of steam in pipes, 118
Fuel economizers, 13
gas, 485, 495
heat of, 486
measurement of, 505
Fundamental equations of thermodynamics, 152

Gage, Bourdon, 27
vacuum, 28
Gages, see Calibration
Gallons, displacement of a pump in, 329
Gas, alcohol, 482
ammonia, Table I
calorific equivalent of, 486
combustion, rise in temperature, 486
Gas-engines:
efficiency of, 484
test, form of, 538
test, rules for, 502
Gas, flow of, in pipes, 117
illuminating, fuel valve of, 486
meters (see Calibrating), 504
producers, 487
Gases, Charles' law of, 137
Joules' law of, 137
specific heats of, 571
weight and specific gravity of, 571
Gasoline-engines, 484
Governors:
details of, 19
fly-ball, 332
friction, 338
Hartnell, power of, 339
practical forms of, 334
Proell, 335
Rites inertia, 348, 386
sensitiveness of, 334
shaft, 343
throttling, 328
weighted, 332
Grate area, to find, 37
Green's fuel economizer, 13

Hamilton-Holzwarth turbine, 480
Heat balance of gas-engines, 484, 508
consumption in a gas-engine, 505
consumption in a steam-engine plant, 36, 41
curve of constant, 224
effect on solids, liquids, gases, 130
expansion by, 131
graphical illustration of expenditure of, 43
interchanges, 196
internal work, 132
latent, of evaporation, 132
mechanical equivalent of, 9
of combustion, 35, 486, 490
of the liquid, 162
Heat represented by areas, 148–153
required at melting-points, Table I
required to produce steam, 165
specific, 132, 134
storing, 127
total, in steam, 132, 164
transmission of, in boilers, 242, 245
in condensers, 242; in cylinders, 303; in feed-water heaters, 298; in multiple effects, 520; in vacuum-pans, 522
Heaters, feed-water, 248, 256, 298
Heating surface of boilers, definition of, 11
values of various substances, 572
Heat-units, 132
Helical springs, 348
Hirn's analysis, 194
Horse-power, boiler, 36
to supply electric lamps, 39
Horse-power, definition, 31
brake, 32
equivalents of, 32
hour, 35
indicated, 31, 42
of steam-engines, 31, 42
Hot water, transmission of heat through pipes carrying, 184
Hot-well, definition of, 23
Houghtaling reducing motion, 54
Humidity, relative, Table V
Hyperbola, equation of, 68, 69
construction of, 68, 69
Hyperbolic logarithms, Table II

Ice, specific heat of, 160
latent heat of, 160
making machines, 510
making, units of, 484
Ideal engines, ratio of economy to, 229
Impact of bodies, 295
Indicated horse-power, 31, 42, 73
Indicator-diagrams:
analysis of, 192
area of, 79
converting, into entropy diagram, 225, 491
correction of, for clearance, 82; for energy of reciprocating parts, 381
of gas-engines, 492; converted into entropy diagrams, 225
pendulum rig for taking, 59
reducing motions for, 59
water consumption shown by, 191
Indicators, see Calibration, 46
Crosby, 46
Tabor, 52
Indicator-springs, testing, 74–76
Inertia governors, theory of, 349, 000
Inertia of indicator pistons, 65
Initial condensation, 186, 302, 326

Initial amount of superheat required to prevent, 437
Injection water, 235, 241
Injectors, theory of, 292
  method of using, 296
Interchange of heat in cylinders, 196, 198, 303
Internal energy, 164
Isochronous, 337
Isothermal expansion, 68, 69, 77
  work done during, 79

Jacket steam, 198, 303
  water, 426
Jet condenser, 26, 233
  impulse due to, 450
Joules' equivalent, 9
Journal, main, design, 547, 559

Kinetic energy, 3, 131, 164, 330

Lap and lead of valves, 89, 111
Latent heat:
  of evaporation, 163, Table VIII
  of fusion, 120, Table I
Leakage of air, 234; gas and oil, tests for, 502
  of steam, tests for, 414, 421
  of water, tests for, 421, 427
Lenoir cycle, 481
Link arc, 353, 360
Links, 352
Liquids, expansion of, 131, 132
  heat of, 162
  molecular movement in, 127
  vaporizing, 130
  weight and specific gravity of, Table I
Locomotives, 568
Logarithms, converting hyperbolic to common, 494
  hyperbolic, Table II
Marine engines:
  air-pump for, 274
  circulating pump for, 290
  diagram factors for, 325
  link for, 354
  ratio of expansion in, 325
Mass of connecting-rod, division of, to find effective and shaking forces, 377, 401
Maximum efficiency of jet action, 426
Measuring clearance, 417
  engines, 416
  revolutions, 430
Mechanical equivalent of heat, 9
Melting-point of solids, 290
Metals, specific gravity, of Table I
Meyer valve-gear, 370
Mid-position of valve, 92
Moisture in steam, 169
Molecular motion, 128
Moment of a force, 294
  of inertia, 400
Momentum, 294
Multiple distillation, 517
Multiple effects, 517
  expansion engines, proper ratio of expansion, 325

Naperian logarithms, Table II
Napier's formula, 172, 178
Normal reading of a calorimeter, 175, 178
Nozzles, flow in, 444, 446
  in calorimeters, 170
  in steam-turbines, 457, 464
  velocity of steam in, 216

Open rods, definition, 358
Orifices, flow of steam from, 172, 178
  flow of water from, 416
  thermal effects on steam flowing through, 216, 224, 446
Oxygen required for combustion, Table IV

Parabolic governor, 338
Parsons' steam-turbine, 466
Peabody calorimeter, 173
Pendulum, or conoidal governor, 332
Perfect gases, definition of, 127
  primary laws of, 135, 142, 145
Phase degrees, 373, 406
Pin, pressure on crank-, 382
Pipes, equivalent, 119
  exhaust, 552, 564
  flow of air in, 115
  flow of gas in, 116
  flow of steam in, 116
  loss of head in, 118
  steam-, covering for, 183
  steam-, sizes of, for engines, 110, 118, 551, 563
Piston, design, 562
  details of, 20, 554
Piston movement, 86
Piston-rod, design, 545, 557
Pole degrees, 374
Poppet-valves, 371
Port, width of, 90, 111, 551, 563
Port-opening, 90
Potential energy, 3
Pounding of engines, 380
Power of a governor, 339
  of an electric circuit, 32
  rate of work, 31
Pressure, bearing, 548
Pressure from producer-gas, 491
  net steam, 375
  volume and temperature, relations in perfect gases, 147
Priming, 181
Producer-gas, 487

Producer-gas, pressure from, 491
Proell governor, 335
Properties of substances, 477
Pumps:
  air, 23, 277–284
  average steam consumption of, 37
  boiler-feed, 13, 285
  capacity of, 289
  cards from, 283, 286
  centrifugal, 290
  circulating, 25, 288
  displacement of in gallons, 289
  efficiency of, 285
  piston speed of, 289
  sizes of, 289
  speed of water through, 288
Purifiers, 254
Pyrometer, see Calibration, 419

Quality of steam, 166, 177, 180

R, for perfect gases, Table I
Radiation in steam-calorimeters, 175
Rankine cycle, 228, 229
Rankine's formula for flow of steam, 178
Rates, 30
Ratio of expansion, 72, 321
  proper, in multiple-expansion engines, 325
Reaction, degree of, 476
Receivers, definition of, 16
  design of, 298, 325
  effect of, 325, 326
  reheating in, 298
  size of, 326
Reciprocating parts, 375
  concentrated at crank-pin, 377
Recompression, 189
Reducing motion, 59
Reducing-wheels, 54
Re-evaporation, 187
Refrigerating-machines, 530
  Allen dense-air, 530
  ammonia absorption, 530
  ammonia compression, 532
  entropy diagram of, 535
  ice-melting capacity, 537
Regnault's formula, 166
Reheaters, 297
Revolutions, measuring, 420

Saddle-pin, position of, 358
Saturated steam, dry, definition of, 166
  expansion curve of, 213
  line, 213
  pressures, Tables VIII to XIII
  wet, definition of, 166
Scavenging, 482
Sensitiveness of a governor, 334
Separator calorimeter, 173
Separators, 13, 297
Shaft-governor, 341
Shaking forces, 404
Simple engine, diagram factor, 81
Slide-valve:
  balanced, 351
  diagrams, 93, 101
  lap and lead of, 88
Solids, melting-point of, 160
  properties of, Table I
Specific gravity:
  of gases, Table I
  of liquids, Table I
  of solids, Table I
Specific heat, definition of, 132
  of gases, 132, 134, 571
  of liquids, 132
  of solids, 132
  of superheated steam, 589
Speed, measuring, 430
Springs, calibration of, 76
  for governors, 348
Standard boiler, 41
  efficiency, 41
Standard coal, 41
Standard form for testing gas-engines, 512, see Tests
  rules for testing gas-engines, see Tests; for testing steam-engines, see Tests; for testing rules, see Tests
  steam-boiler, 41
Standards of efficiency and ecnoomy, 508
Starting and stopping tests, 424
Steam, accounted for by indicator, 191
  actual consumption of, 37, 201
  condensation of, due to expansion, 200
  condensation of, initial, 186, 302, 326
  dry saturated, 169
  expansion curves, 213
  expansive working of, 301
  flow, 110, 588
  in nozzles, 216, 445
  in orifices, 172, 178
  in pipes, 115
  jacket, 198, 303, 305
  lead, 111
  line at constant pressure, 212
  loss of pressure of, 321
  moisture in, 169
  nozzles, 447
  pipe covering, 183
  pipes, 116
  plant, 425
  ports, 90, 110
  quality, see Calorimeter
  separator, 13
  superheated, see Superheater
  table, Table VIII, IX
  velocity of, in nozzles, 216

Steam, weight of, accounted for by indicator, 191
Steam-boiler, economy of, 13, 35
heating-surface of, 11
Steam-calorimeters, 171
Steam-engines:
compound, 305
Corliss, 366, 368
counterbalancing, 400–403
expansion work in, 68, 69, 77
leakage of steam in, 185, 414, 421
mean effective pressure in, 77, 79
measurement of steam in, 438
measure of duty in, 36
most economical point of cut-off, 325
proportions of cylinders of, 304, 305
ratio of expansion in, 70, 321
steam consumption in, 186
tests of, rules for conducting, see Tests
using superheated steam, 441
Steam-pipes, 551, 563
Steam-ports, 551, 563
Steam-turbines, economy at various loads, 462
economy at various speeds, 462
economy of various sizes, 462
effect of water in, 462
Superheated steam, data of test, 436
efficiency of, 363, 437
engines using, 438
entropy diagram of, 441
in compound engines, 442
lubrication when using, 440
regulation of, 440
specific heat of, 170, 436
total heat of, 435
turbines, 434
Superheater, Foster, 432
data of, 438
durability, 443
Superheating, intensity required, 435
Surface section, ratio, 265
Streams, measurement of force due to 449
turning the path of, 449
Sugar, manufacture of, 517
Surface condenser, 23

Tandem compound engine, 307
Tangential pressure on crank-pin, 382
Temperature, absolute, 7
definition of, 5
mean, to find, 245
volume and pressure, relations between, 147, 510
Temperature-entropy diagram, 225; from indicator-card, 225, 491
Test of Diesel engine, 500
Testing indicator springs, 505
Tests, standard form for gas-engine, 513–537; standard for steam-engine, 537
standard method of making gas-engine, 502; complete engine and boiler, 425; steam-engine, 32, 36, 54, 57, 62, 63, 70, 72, 73, 74–78, 193, 229, 318, 321, 325, 411–30
Thermal action of cylinder walls, 187
Thermal efficiency, definition, 42, 263
Thermal unit, definition of, 5
Thermodynamics, definition of, 14
first law of, 8
fundamental equations of, 152
second law of, 9
Thermometers, definition of, 5
calibration of, 8, 419
Thickness of cylinder walls, 112
of bridge, 113
Throttling-calorimeter, 173
Torque, 2
Total heat, in steam, 165
required to produce saturated steam, 165; superheated steam, 437
Turbines:
Curtis, 460
De Laval, 454
Hamilton-Holtzwarth, 480
Parsons, 466
steam, 445
Turning forces, analysis of, 386, 406
Twisting moment, 2

Unit of heat, 5; of temperature, 5; of work, 2

Vacuum gage, true meaning of reading, 267
pan, 517, 528
production, economy in, 264
pumps, 268
Valve, Corliss, drop or detachable, 356
Valve-diagrams, 93, 94, 100
geometrical relations, 97
Valve ellipse, 114
lap or travel, 88, 89
seats, area through, 110
slide, 88
Vaporizing water, 163
Vapors, definition of, 127, Table VI
Velocity and acceleration of pistons, 86
Velocity of steam in nozzles, 216
in passages and ports, 107
Volume, temperature and pressure, relations of, in perfect gases, 147
one pound of steam, 576, 582

Water, boiling-point of, equation of, 161
boiling-point of, Table VIII

Water, equivalent of a calorimeter, 175
expansion of, 163
friction brake, 34
gas, 488
line, 210
meters, see Calibration, 429
per horse-power-hour, definition of, 35
pumping engines, tests, 542
specific heat of, Table VII
Weight of engine, 553, 567
Weight of gases, Table I
of liquids, Table I
of one pound of steam, 576, 582
of solids, Table I
of steam accounted for by the indicator, 191
of steam discharged from a nozzle, 447
Weights of air, vapor of water, and saturated mixtures of air and vapor at various temperatures and constant pressures, 574
Wet steam, 169
saturated steam, 167
Woolf type of compound engine, 322
Work, definition of, 2
of acceleration, 448
done in accelerating a steam-jet, 476
during expansion, 142, 215
Working steam and clearance steam, 82, 227

Zero, absolute, 7
Zeuner valve-diagram, 94, 100
Zeuner's formula for the flow of perfect gases from a nozzle, 446
Zinc in condenser tubes, 241

SHORT-TITLE CATALOGUE

OF THE

PUBLICATIONS

OF

JOHN WILEY & SONS

NEW YORK

LONDON: CHAPMAN & HALL, LIMITED

ARRANGED UNDER SUBJECTS

Descriptive circulars sent on application. Books marked with an asterisk (*) are sold at *net* prices only. All books are bound in cloth unless otherwise stated.

AGRICULTURE—HORTICULTURE—FORESTRY.

Armsby's Principles of Animal Nutrition	8vo,	$4 00
Budd and Hansen's American Horticultural Manual:		
Part I. Propagation, Culture, and Improvement	12mo,	1 50
Part II. Systematic Pomology	12mo,	1 50
Elliott's Engineering for Land Drainage	12mo,	1 50
Practical Farm Drainage. (Second Edition, Rewritten)	12mo,	1 50
Graves's Forest Mensuration	8vo,	4 00
Green's Principles of American Forestry	12mo,	1 50
Grotenfelt's Principles of Modern Dairy Practice. (Woll.)	12mo,	2 00
* Herrick's Denatured or Industrial Alcohol	8vo,	4 00
Kemp and Waugh's Landscape Gardening. (New Edition, Rewritten. In Preparation).		
* McKay and Larsen's Principles and Practice of Butter-making	8vo,	1 50
Maynard's Landscape Gardening as Applied to Home Decoration	12mo,	1 50
Sanderson's Insects Injurious to Staple Crops	12mo,	1 50
Sanderson and Headlee's Insects Injurious to Garden Crops. (In Preparation).		
* Schwarz's Longleaf Pine in Virgin Forests	12mo,	1 25
Stockbridge's Rocks and Soils	8vo,	2 50
Winton's Microscopy of Vegetable Foods	8vo,	7 50
Woll's Handbook for Farmers and Dairymen	16mo,	1 50

ARCHITECTURE.

Baldwin's Steam Heating for Buildings	12mo,	2 50
Berg's Buildings and Structures of American Railroads	4to,	5 00
Birkmire's Architectural Iron and Steel	8vo,	3 50
Compound Riveted Girders as Applied in Buildings	8vo,	2 00
Planning and Construction of American Theatres	8vo,	3 00
Planning and Construction of High Office Buildings	8vo,	3 50
Skeleton Construction in Buildings	8vo,	3 00

Briggs's Modern American School Buildings....8vo, $4 00
Byrne's Inspection of Materials and Wormanship Employed in Construction. 16mo, 3 00
Carpenter's Heating and Ventilating of Buildings....8vo, 4 00
* Corthell's Allowable Pressure on Deep Foundations....12mo, 1 25
Freitag's Architectural Engineering....8vo, 3 50
Fireproofing of Steel Buildings....8vo, 2 50
Gerhard's Guide to Sanitary Inspections. (Fourth Edition, Entirely Revised and Enlarged)....12mo, 1 50
* Modern Baths and Bath Houses....8vo, 3 00
Sanitation of Public Buildings....12mo, 1 50
Theatre Fires and Panics....12mo, 1 50
Johnson's Statics by Algebraic and Graphic Methods....8vo, 2 00
Kellaway's How to Lay Out Suburban Home Grounds....8vo, 2 00
Kidder's Architects' and Builders' Pocket-book....16mo, mor., 5 00
Merrill's Stones for Building and Decoration....8vo, 5 00
Monckton's Stair-building....4to, 4 00
Patton's Practical Treatise on Foundations....8vo, 5 00
Peabody's Naval Architecture....8vo, 7 50
Rice's Concrete-block Manufacture....8vo, 2 00
Richey's Handbook for Superintendents of Construction....16mo, mor. 4 00
Building Foreman's Pocket Book and Ready Reference..16mo, mor. 5 00
* Building Mechanics' Ready Reference Series:
* Carpenters' and Woodworkers' Edition....16mo, mor. 1 50
* Cement Workers' and Plasterers' Edition....16mo, mor. 1 50
* Plumbers', Steam-Fitters', and Tinners' Edition..16mo, mor. 1 50
* Stone- and Brick-masons' Edition....16mo, mor. 1 50
Sabin's House Painting....12mo, 1 00
Siebert and Biggin's Modern Stone-cutting and Masonry....8vo, 1 50
Snow's Principal Species of Wood....8vo, 3 50
Towne's Locks and Builders' Hardware....18mo, mor. 3 00
Wait's Engineering and Architectural Jurisprudence....8vo, 6 00
Sheep, 6 50
Law of Contracts....8vo, 3 00
Law of Operations Preliminary to Construction in Engineering and Architecture....8vo, 5 00
Sheep, 5 50
Wilson's Air Conditioning....12mo, 1 50
Worcester and Atkinson's Small Hospitals, Establishment and Maintenance, Suggestions for Hospital Architecture, with Plans for a Small Hospital. 12mo, 1 25

ARMY AND NAVY.

Bernadou's Smokeless Powder, Nitro-cellulose, and the Theory of the Cellulose Molecule....12mo, 2 50
Chase's Art of Pattern Making....12mo, 2 50
Screw Propellers and Marine Propulsion....8vo, 3 00
* Cloke's Enlisted Specialists' Examiner....8vo, 2 00
Gunner's Examiner....8vo, 1 50
Craig's Azimuth....4to, 3 50
Crehore and Squier's Polarizing Photo-chronograph....8vo, 3 00
* Davis's Elements of Law....8vo, 2 50
* Treatise on the Military Law of United States....8vo, 7 00
DeBrack's Cavalry Outpost Duties. (Carr.)....24mo, mor. 2 00
* Dudley's Military Law and the Procedure of Courts-martial...Large 12mo, 2 50
Durand's Resistance and Propulsion of Ships....8vo, 5 00
* Dyer's Handbook of Light Artillery....12mo, 3 00
Eissler's Modern High Explosives....8vo, 4 00
* Fiebeger's Text-book on Field Fortification....Large 12mo, 2 00
Hamilton and Bond's The Gunner's Catechism....18mo, 1 00
* Hoff's Elementary Naval Tactics....8vo, 1 50
Ingalls's Handbook of Problems in Direct Fire....8vo, 4 00
* Lissak's Ordnance and Gunnery....8vo, 6 00

Ingalls's Handbook of Problems in Direct Fire.....8vo, $4 00
* Lissak's Ordnance and Gunnery.....8vo, 6 00
* Ludlow's Logarithmic and Trigonometric Tables.....8vo, 1 00
* Lyons's Treatise on Electromagnetic Phenomena. Vols. I. and II..8vo, each, 6 00
* Mahan's Permanent Fortifications. (Mercur.).....8vo, half mor. 7 50
Manual for Courts-martial.....16mo, mor. 1 50
* Mercur's Attack of Fortified Places.....12mo, 2 00
* Elements of the Art of War.....8vo, 4 00
Nixon's Adjutants' Manual.....24mo, 1 00
Peabody's Naval Architecture.....8vo, 7 50
* Phelps's Practical Marine Surveying.....8vo, 2 50
Putnam's Nautical Charts.....8vo, 2 00
Rust's Ex-meridian Altitude, Azimuth and Star-Finding Tables.....8vo 5 00
Sharpe's Art of Subsisting Armies in War.....18mo, mor 1 50
* Tupes and Poole's Manual of Bayonet Exercises and Musketry Fencing. 24mo, leather, 50
* Weaver's Military Explosives.....8vo, 3 00
* Woodhull's Military Hygiene for Officers of the Line.....Large 12mo, 1 50

ASSAYING.

Betts's Lead Refining by Electrolysis.....8vo, 4 00
Fletcher's Practical Instructions in Quantitative Assaying with the Blowpipe. 16mo, mor. 1 50
Furman and Pardoe's Manual of Practical Assaying. (Sixth Edition, Revised and Enlarged.).....8vo, 3 00
Lodge's Notes on Assaying and Metallurgical Laboratory Experiments..8vo 3 00
Low's Technical Methods of Ore Analysis.....8vo, 3 00
Miller's Cyanide Process.....12mo, 1 00
Manual of Assaying.....12mo, 1 00
Minet's Production of Aluminum and its Industrial Use. (Waldo.)...12mo, 2 50
O'Driscoll's Notes on the Treatment of Gold Ores.....8vo, 2 00
Ricketts and Miller's Notes on Assaying.....8vo, 3 00
Robine and Lenglen's Cyanide Industry. (Le Clerc.).....8vo, 4 00
Seamon's Manual for Assayers and Chemists. (In Press.)
Ulke's Modern Electrolytic Copper Refining.....8vo, 3 00
Wilson's Chlorination Process.....12mo, 1 50
Cyanide Processes.....12mo, 1 50

ASTRONOMY.

Comstock's Field Astronomy for Engineers.....8vo, 2 50
Craig's Azimuth.....4to, 3 50
Crandall's Text-book on Geodesy and Least Squares.....8vo, 3 00
Doolittle's Treatise on Practical Astronomy.....8vo, 4 00
Hayford's Text-book of Geodetic Astronomy.....8vo, 3 00
Hosmer's Azimuth.....16mo, mor. 1 00
Merriman's Elements of Precise Surveying and Geodesy.....8vo, 2 50
* Michie and Harlow's Practical Astronomy.....8vo, 3 00
Rust's Ex-meridian Altitude, Azimuth and Star-Finding Tables.....8vo, 5 00
* White's Elements of Theoretical and Descriptive Astronomy.....12mo, 2 00

CHEMISTRY.

* Abderhalden's Physiological Chemistry in Thirty Lectures. (Hall and Defren.).....8vo, 5 00
* Abegg's Theory of Electrolytic Dissociation. (von Ende.).....12mo, 1 25
Alexeyeff's General Principles of Organic Syntheses. (Matthews.).....8vo, 3 00
Allen's Tables for Iron Analysis.....8vo, 3 00
Armsby's Principles of Animal Nutrition.....8vo, 4 00
Arnold's Compendium of Chemistry. (Mandel.).....Large 12mo, 3 50

Association of State and National Food and Dairy Departments, Hartford Meeting, 1906....8vo, $3 00
Jamestown Meeting, 1907....8vo, 3 00
Austen's Notes for Chemical Students....12mo, 1 50
Baskerville's Chemical Elements. (In Preparation.)
Bernadou's Smokeless Powder.—Nitro-cellulose, and Theory of the Cellulose Molecule....12mo, 2 50
* Biltz's Introduction to Inorganic Chemistry. (Hall and Phelan.)....12mo, 1 25
Laboratory Methods of Inorganic Chemistry. (Hall and Blanchard.) 8vo, 3 00
* Blanchard's Synthetic Inorganic Chemistry....12mo, 1 00
* Browning's Introduction to the Rarer Elements....8vo, 1 50
* Claassen's Beet-sugar Manufacture. (Hall and Rolfe.)....8vo, 3 00
Classen's Quantitative Chemical Analysis by Electrolysis. (Boltwood.)8vo, 3 00
Cohn's Indicators and Test-papers....12mo, 2 00
Tests and Reagents....8vo, 3 00
* Danneel's Electrochemistry. (Merriam.)....12mo, 1 25
Dannerth's Methods of Textile Chemistry....12mo, 2 00
Duhem's Thermodynamics and Chemistry. (Burgess.)....8vo, 4 00
Effront's Enzymes and their Applications. (Prescott.)....8vo, 3 00
Eissler's Modern High Explosives....8vo, 4 00
Erdmann's Introduction to Chemical Preparations. (Dunlap.)....12mo, 1 25
* Fischer's Physiology of Alimentation....Large 12mo, 2 00
Fletcher's Practical Instructions in Quantitative Assaying with the Blowpipe. 12mo, mor. 1 50
Fowler's Sewage Works Analyses....12mo, 2 00
Fresenius's Manual of Qualitative Chemical Analysis. (Wells.)....8vo, 5 00
Manual of Qualitative Chemical Analysis. Part I. Descriptive. (Wells.)8vo, 3 00
Quantitative Chemical Analysis. (Cohn.) 2 vols....8vo, 12 50
When Sold Separately, Vol. I, $6. Vol. II, $8.
Fuertes's Water and Public Health....12mo, 1 50
Furman and Pardoe's Manual of Practical Assaying. (Sixth Edition, Revised and Enlarged.)....8vo, 3 00
* Getman's Exercises in Physical Chemistry....12mo, 2 00
Gill's Gas and Fuel Analysis for Engineers....12mo, 1 25
* Gooch and Browning's Outlines of Qualitative Chemical Analysis. Large 12mo, 1 25
Grotenfelt's Principles of Modern Dairy Practice. (Woll.)....12mo, 2 00
Groth's Introduction to Chemical Crystallography (Marshall)....12mo, 1 25
Hammarsten's Text-book of Physiological Chemistry. (Mandel.)....8vo, 4 00
Hanausek's Microscopy of Technical Products. (Winton.)....8vo, 5 00
* Haskins and Macleod's Organic Chemistry....12mo, 2 00
Hering's Ready Reference Tables (Conversion Factors)....16mo, mor. 2 50
* Herrick's Denatured or Industrial Alcohol....8vo, 4 00
Hinds's Inorganic Chemistry....8vo, 3 00
* Laboratory Manual for Students....12mo, 1 00
* Holleman's Laboratory Manual of Organic Chemistry for Beginners. (Walker.)....12mo, 1 00
Text-book of Inorganic Chemistry. (Cooper.)....8vo, 2 50
Text-book of Organic Chemistry. (Walker and Mott.)....8vo, 2 50
* Holley's Lead and Zinc Pigments....Large 12mo, 3 00
Holley and Ladd's Analysis of Mixed Paints, Color Pigments, and Varnishes. Large 12mo, 2 50
Hopkins's Oil-chemists' Handbook....8vo, 3 00
Jackson's Directions for Laboratory Work in Physiological Chemistry..8vo, 1 25
Johnson's Rapid Methods for the Chemical Analysis of Special Steels, Steel-making Alloys and Graphite....Large 12mo, 3 00
Landauer's Spectrum Analysis. (Tingle.)....8vo, 3 00
* Langworthy and Austen's Occurrence of Aluminum in Vegetable Products, Animal Products, and Natural Waters....8vo, 2 00
Lassar-Cohn's Application of Some General Reactions to Investigations in Organic Chemistry. (Tingle.)....12mo, 1 00
Leach's Inspection and Analysis of Food with Special Reference to State Control....8vo, 7 50
Löb's Electrochemistry of Organic Compounds. (Lorenz.)....8vo, 3 00
Lodge's Notes on Assaying and Metallurgical Laboratory Experiments..8vo, 3 00
Low's Technical Method of Ore Analysis....8vo, 3 00

Lowe's Paint for Steel Structures	12mo,	$1 00
Lunge's Techno-chemical Analysis. (Cohn.)	12mo,	1 00
* McKay and Larsen's Principles and Practice of Butter-making	8vo,	1 50
Maire's Modern Pigments and their Vehicles	12mo,	2 00
Mandel's Handbook for Bio-chemical Laboratory	12mo,	1 50
* Martin's Laboratory Guide to Qualitative Analysis with the Blowpipe	12mo,	0 60
Mason's Examination of Water. (Chemical and Bacteriological.)	12mo,	1 25
Water-supply. (Considered Principally from a Sanitary Standpoint.)	8vo,	4 00
* Mathewson's First Principles of Chemical Theory	8vo,	1 00
Matthews's Laboratory Manual of Dyeing and Textile Chemistry	8vo,	3 50
Textile Fibres. 2d Edition, Rewritten	8vo,	4 00
* Meyer's Determination of Radicles in Carbon Compounds. (Tingle.) Third Edition	12mo,	1 25
Miller's Cyanide Process	12mo,	1 00
Manual of Assaying	12mo,	1 00
Minet's Production of Aluminum and its Industrial Use. (Waldo.)	12mo,	2 50
* Mittelstaedt's Technical Calculations for Sugar Works. (Bourbakis.)	12mo,	1 50
Mixter's Elementary Text-book of Chemistry	12mo,	1 50
Morgan's Elements of Physical Chemistry	12mo,	3 00
Outline of the Theory of Solutions and its Results	12mo,	1 00
* Physical Chemistry for Electrical Engineers	12mo,	1 50
Morse's Calculations used in Cane-sugar Factories	16mo, mor.	1 50
* Muir's History of Chemical Theories and Laws	8vo,	4 00
Mulliken's General Method for the Identification of Pure Organic Compounds. Vol. I. Compounds of Carbon with Hydrogen and Oxygen.	Large 8vo,	5 00
Vol. II. Nitrogenous Compounds. (In Preparation.)		
Vol. III. The Commercial Dyestuffs	Large 8vo,	5 00
O'Driscoll's Notes on the Treatment of Gold Ores	8vo,	2 00
Ostwald's Conversations on Chemistry. Part One. (Ramsey.)	12mo,	1 50
" " " " Part Two. (Turnbull.)	12mo,	2 00
Owen and Standage's Dyeing and Cleaning of Textile Fabrics	12mo,	2 00
* Palmer's Practical Test Book of Chemistry	12mo,	1 00
* Pauli's Physical Chemistry in the Service of Medicine. (Fischer.)	12mo,	1 25
Penfield's Tables of Minerals, Including the Use of Minerals and Statistics of Domestic Production	8vo,	1 00
Pictet's Alkaloids and their Chemical Constitution. (Biddle.)	8vo,	5 00
Poole's Calorific Power of Fuels	8vo,	3 00
Prescott and Winslow's Elements of Water Bacteriology, with Special Reference to Sanitary Water Analysis	12mo,	1 50
* Reisig's Guide to Piece-Dyeing	8vo,	25 00
Richards and Woodman's Air, Water, and Food from a Sanitary Standpoint	8vo.	2 00
Ricketts and Miller's Notes on Assaying	8vo,	3 00
Rideal's Disinfection and the Preservation of Food	8vo,	4 00
Sewage and the Bacterial Purification of Sewage	8vo,	4 00
Rigg's Elementary Manual for the Chemical Laboratory	8vo,	1 25
Robine and Lenglen's Cyanide Industry. (Le Clerc.)	8vo,	4 00
Ruddiman's Incompatibilities in Prescriptions	8vo,	2 00
Whys in Pharmacy	12mo,	1 00
* Ruer's Elements of Metallography. (Mathewson.)	8vo,	3 00
Sabin's Industrial and Artistic Technology of Paint and Varnish	8vo,	3 00
Salkowski's Physiological and Pathological Chemistry. (Orndorff.)	8vo,	2 50
Schimpf's Essentials of Volumetric Analysis	12mo,	1 25
Manual of Volumetric Analysis. (Fifth Edition, Rewritten)	8vo,	5 00
* Qualitative Chemical Analysis	8vo,	1 25
Seamon's Manual for Assayers and Chemists. (In Press.)		
Smith's Lecture Notes on Chemistry for Dental Students	8vo,	2 50
Spencer's Handbook for Cane Sugar Manufacturers	16mo, mor.	3 00
Handbook for Chemists of Beet-sugar Houses	16mo, mor.	3 00
Stockbridge's Rocks and Soils	8vo,	2 50
Stone's Practical Testing of Gas and Gas Meters	8vo,	3 50
* Tillman's Descriptive General Chemistry	8vo,	3 00
* Elementary Lessons in Heat	8vo,	1 50
Treadwell's Qualitative Analysis. (Hall.)	8vo,	3 00
Quantitative Analysis. (Hall.)	8vo,	4 00

Turneaure and Russell's Public Water-supplies.....8vo, $5 00
Van Deventer's Physical Chemistry for Beginners. (Boltwood.).....12mo, 1 50
Venable's Methods and Devices for Bacterial Treatment of Sewage.....8vo, 3 00
Ward and Whipple's Freshwater Biology. (In Press.)
Ware's Beet-sugar Manufacture and Refining. Vol. I.....8vo, 4 00
" " " " " Vol. II.....8vo, 5 00
Washington's Manual of the Chemical Analysis of Rocks.....8vo, 2 00
* Weaver's Military Explosives.....8vo, 3 00
Wells's Laboratory Guide in Qualitative Chemical Analysis.....8vo, 1 50
Short Course in Inorganic Qualitative Chemical Analysis for Engineering Students.....12mo, 1 50
Text-book of Chemical Arithmetic.....12mo, 1 25
Whipple's Microscopy of Drinking-water.....8vo, 3 50
Wilson's Chlorination Process.....12mo, 1 50
Cyanide Processes.....12mo, 1 50
Winton's Microscopy of Vegetables Food.....8vo, 1 50
Zsigmondy's Colloids and the Ultramicroscope. (Alexander.)..Large 12mo, 3 00

CIVIL ENGINEERING.

BRIDGES AND ROOFS. HYDRAULICS. MATERIALS OF ENGINEERING. RAILWAY ENGINEERING.

Baker's Engineers' Surveying Instruments.....12mo, 3 00
Bixby's Graphical Computing Table.....Paper 19½ × 24½ inches. 25
Breed and Hosmer's Principles and Practice of Surveying. Vol. I. Elementary Surveying.....8vo, 3 00
Vol. II. Higher Surveying.....8vo, 2 50
* Burr's Ancient and Modern Engineering and the Isthmian Canal.....8vo, 3 50
Comstock's Field Astronomy for Engineers.....8vo, 2 50
* Corthell's Allowable Pressure on Deep Foundations.....12mo, 1 25
Crandall's Text-book on Geodesy and Least Squares.....8vo, 3 00
Davis's Elevation and Stadia Tables.....8vo, 1 00
Elliott's Engineering for Land Drainage.....12mo, 1 50
Practical Farm Drainage. (Second Edition Rewritten.).....12mo, 1 50
* Fiebeger's Treatise on Civil Engineering.....8vo, 5 00
Flemer's Photographic Methods and Instruments.....8vo, 5 00
Folwell's Sewerage. (Designing and Maintenance.).....8vo, 3 00
Freitag's Architectural Engineering.....8vo, 3 50
Goodhue's Municipal Improvements.....12mo, 1 50
* Hauch and Rice's Tables of Quantities for Preliminary Estimates...12mo, 1 25
Hayford's Text-book of Geodetic Astronomy.....8vo, 3 00
Hering's Ready Reference Tables (Conversion Factors.).....16mo, mor. 2 50
Hosmer's Azimuth.....16mo, mor. 1 00
Howe' Retaining Walls for Earth.....12mo, 1 25
* Ives's Adjustments of the Engineer's Transit and Level.....16mo, bds. 25
Johnson's (J. B.) Theory and Practice of Surveying.....Large 12mo, 4 00
Johnson's (L. J.) Statics by Algebraic and Graphic Methods.....8vo, 2 00
Kinnicutt, Winslow and Pratt's Purification of Sewage. (In Preparation.)
* Mahan's Descriptive Geometry.....8vo, 1 50
Merriman's Elements of Precise Surveying and Geodesy.....8vo, 2 50
Merriman and Brooks's Handbook for Surveyors.....16mo, mor. 2 00
Nugent's Plane Surveying.....8vo, 3 50
Ogden's Sewer Construction.....8vo, 3 00
Sewer Design.....12mo, 2 00
Parsons's Disposal of Municipal Refuse.....8vo, 2 00
Patton's Treatise on Civil Engineering.....8vo, half leather, 7 50
Reed's Topographical Drawing and Sketching.....4to, 5 00
Rideal's Sewage and the Bacterial Purification of Sewage.....8vo, 4 00
Riemer's Shaft-sinking under Difficult Conditions. (Corning and Peele.).8vo, 3 00
Siebert and Biggin's Modern Stone-cutting and Masonry.....8vo, 1 50
Smith's Manual of Topographical Drawing. (McMillan.).....8vo, 2 50

Soper's Air and Ventilation of Subways.....12mo, $2 50
* Tracy's Exercises in Surveying.....12mo, mor. 1 00
Tracy's Plane Surveying.....16mo, mor. 3 00
* Trautwine's Civil Engineer's Pocket-book.....16mo, mor. 5 00
Venable's Garbage Crematories in America.....8vo, 2 00
Methods and Devices for Bacterial Treatment of Sewage.....8vo, 3 00
Wait's Engineering and Architectural Jurisprudence.....8vo, 6 00
Sheep, 6 50
Law of Contracts.....8vo, 3 00
Law of Operations Preliminary to Construction in Engineering and Architecture.....8vo, 5 00
Sheep, 5 50
Warren's Stereotomy—Problems in Stone-cutting.....8vo, 2 50
* Waterbury's Vest-Pocket Hand-book of Mathematics for Engineers.
$2\frac{7}{8} \times 5\frac{3}{8}$ inches, mor. 1 00
* Enlarged Edition, Including Tables.....mor. 1 50
Webb's Problem's in the Use and Adjustment of Engineering Instruments.
16mo, mor. 1 25
Wilson's Topographic Surveying.....8vo, 3 50

BRIDGES AND ROOFS.

Boller's Practical Treatise on the Construction of Iron Highway Bridges..8vo, 2 00
* Thames River Bridge.....Oblong paper, 5 00
Burr and Falk's Design and Construction of Metallic Bridges.....8vo, 5 00
Influence Lines for Bridge and Roof Computations.....8vo, 3 00
Du Bois's Mechanics of Engineering. Vol. II.....Small 4to, 10 00
Foster's Treatise on Wooden Trestle Bridges.....4to, 5 00
Fowler's Ordinary Fopndations.....8vo, 3 50
Greene's Arches in Wood, Iron, and Stone.....8vo, 2 50
Bridge Trusses.....8vo, 2 50
Roof Trusses.....8vo, 1 25
Grimm's Secondary Stresses in Bridge Trusses.....8vo, 2 50
Heller's Stresses in Structures and the Accompanying Deformations....8vo, 3 00
Howe's Design of Simple Roof-trusses in Wood and Steel.....8vo. 2 00
Symmetrical Masonry Arches.....8vo, 2 50
Treatise on Arches.....8vo, 4 00
* Jacoby's Structural Details, or Elements of Design in Heavy Framing, 8vo, 2 25
Johnson, Bryan and Turneaure's Theory and Practice in the Designing of Modern Framed Structures.....Small 4to, 10 00
Merriman and Jacoby's Text-book on Roofs and Bridges:
Part I. Stresses in Simple Trusses.....8vo, 2 50
Part II. Graphic Statics.....8vo, 2 50
Part III. Bridge Design.....8vo, 2 50
Part IV. Higher Structures.....8vo, 2 50
Morison's Memphis Bridge.....Oblong 4to, 10 00
Sondericker's Graphic Statics, with Applications to Trusses, Beams, and Arches.....8vo, 2 00
Waddell's De Pontibus, Pocket-book for Bridge Engineers.....16mo, mor. 2 00
* Specifications for Steel Bridges.....12mo, 50
Waddell and Harringtoon's Bridge Engineering. (In Preparation.)
Wright's Designing of Draw-spans. Two parts in one volume.....8vo, 3 50

HYDRAULICS.

Barnes's Ice Formation.....8vo, 3 00
Bazin's Experiments upon the Contraction of the Liquid Vein Issuing from an Orifice. (Trautwine.).....8vo, 2 00
Bovey's Treatise on Hydraulics.....8vo, 5 00
Church's Diagrams of Mean Velocity of Water in Open Channels.
Oblong 4to, paper, 1 50
Hydraulic Motors.....8vo, 2 00

Coffin's Graphical Solution of Hydraulic Problems.....16mo, mor. $2 50
Flather's Dynamometers, and the Measurement of Power.....12mo, 3 00
Folwell's Water-supply Engineering.....8vo, 4 00
Frizell's Water-power.....8vo, 5 00
Fuertes's Water and Public Health.....12mo, 1 50
Water-filtration Works.....12mo, 2 50
Ganguillet and Kutter's General Formula for the Uniform Flow of Water in Rivers and Other Channels. (Hering and Trautwine.).....8vo, 4 00
Hazen's Clean Water and How to Get It.....Large 12mo, 1 50
Filtration of Public Water-supplies.....8vo, 3 00
Hazelhurst's Towers and Tanks for Water-works.....8vo, 2 50
Herschel's 115 Experiments on the Carrying Capacity of Large, Riveted, Metal Conduits.....8vo, 2 00
Hoyt and Grover's River Discharge.....8vo, 2 00
Hubbard and Kiersted's Water-works Management and Maintenance. 8vo, 4 00
* Lyndon's Development and Electrical Distribution of Water Power. 8vo, 3 00
Mason's Water-supply. (Considered Principally from a Sanitary Standpoint.).....8vo, 4 00
Merriman's Treatise on Hydraulics.....8vo, 5 00
* Molitor's Hydraulics of Rivers, Weirs and Sluices.....8vo, 2 00
* Richards's Laboratory Notes on Industrial Water Analysis.....8vo, 50
Schuyler's Reservoirs for Irrigation, Water-power, and Domestic Water-supply. Second Edition, Revised and Enlarged.....Large 8vo, 6 00
* Thomas and Watt's Improvement of Rivers.....4to, 6 00
Turneaure and Russell's Public Water-supplies.....8vo, 5 00
Wegmann's Design and Construction of Dams. 5th Ed., enlarged.....4to, 6 00
Water-Supply of the City of New York from 1658 to 1895.....4to, 10 00
Whipple's Value of Pure Water.....Large 12mo, 1 00
Williams and Hazen's Hydraulic Tables.....8vo, 1 50
Wilson's Irrigation Engineering.....8vo, 4 00
Wood's Turbines.....8vo, 2 50

MATERIALS OF ENGINEERING.

Baker's Roads and Pavements.....8vo, 5 00
Treatise on Masonry Construction.....8vo, 5 00
Black's United States Public Works.....Oblong 4to, 5 00
Blanchard's Bituminous Roads. (In Press.)
Bleininger's Manufacture of Hydraulic Cement. (In Preparation.)
* Bovey's Strength of Materials and Theory of Structures.....8vo, 7 50
Burr's Elasticity and Resistance of the Materials of Engineering.....8vo, 7 50
Byrne's Highway Construction.....8vo, 5 00
Inspection of the Materials and Workmanship Employed in Construction. 16mo, 3 00
Church's Mechanics of Engineering.....8vo, 6 00
Du Bois's Mechanics of Engineering.
Vol. I. Kinematics, Statics, Kinetics.....Small 4to, 7 50
Vol. II. The Stresses in Framed Structures, Strength of Materials and Theory of Flexures.....Small 4to, 10 00
* Eckel's Cements, Limes, and Plasters.....8vo, 6 00
Stone and Clay Products used in Engineering. (In Preparation.)
Fowler's Ordinary Foundations.....8vo, 3 50
* Greene's Structural Mechanics.....8vo, 2 50
* Holley's Lead and Zinc Pigments.....Large 12mo, 3 00
Holley and Ladd's Analysis of Mixed Paints, Color Pigments and Varnishes. Large 12mo, 2 50
Hubbard's Dust Preventives and Road Binders. (In Preparation.)
Johnson's (C. M.) Rapid Methods for the Chemical Analysis of Special Steels, Steel-making Alloys and Graphite.....Large 12mo, 3 00
Johnson's (J. B.) Materials of Construction.....Large 8vo, 6 00
Keep's Cast Iron.....8vo, 2 50
Lanza's Applied Mechanics.....8vo, 7 50
Lowe's Paint for Steel Structures.....12mo, 1 00

Maire's Modern Pigments and their Vehicles.....12mo, $2 00
Martens's Handbook on Testing Materials. (Henning.) 2 vols.....8vo, 7 50
Maurer's Technical Mechanics.....8vo, 4 00
Merrill's Stones for Building and Decoration.....8vo, 5 00
Merriman's Mechanics of Materials.....8vo, 5 00
* Strength of Materials.....12mo, 1 00
Metcalf's Steel. A Manual for Steel-users.....12mo, 2 00
Morrison's Highway Engineering.....8vo, 2 50
Patton's Practical Treatise on Foundations.....8vo, 5 00
Rice's Concrete Block Manufacture.....8vo, 2 00
Richardson's Modern Asphalt Pavements.....8vo, 3 00
Richey's Building Foreman's Pocket Book and Ready Reference.16mo,mor. 5 00
* Cement Workers' and Plasterers' Edition (Building Mechanics' Ready Reference Series).....16mo, mor. 1 50
Handbook for Superintendents of Construction.....16mo, mor. 4 00
* Stone and Brick Masons' Edition (Building Mechanics' Ready Reference Series).....16mo, mor. 1 50
* Ries's Clays: Their Occurrence, Properties, and Uses.....8vo, 5 00
* Ries and Leighton's History of the Clay-working Industry of the United States.....8vo. 2 50
Sabin's Industrial and Artistic Technology of Paint and Varnish.....8vo, 3 00
* Smith's Strength of Material.....12mo 1 25
Snow's Principal Species of Wood.....8vo, 3 50
Spalding's Hydraulic Cement.....12mo, 2 00
Text-book on Roads and Pavements.....12mo, 2 00
Taylor and Thompson's Treatise on Concrete, Plain and Reinforced.....8vo, 5 00
Thurston's Materials of Engineering. In Three Parts.....8vo, 8 00
Part I. Non-metallic Materials of Engineering and Metallurgy....8vo, 2 00
Part II. Iron and Steel.....8vo, 3 50
Part III. A Treatise on Brasses, Bronzes, and Other Alloys and their Constituents.....8vo, 2 50
Tillson's Street Pavements and Paving Materials.....8vo, 4 00
* Trautwine's Concrete, Plain and Reinforced.....16mo, 2 00
Turneaure and Maurer's Principles of Reinforced Concrete Construction. Second Edition, Revised and Enlarged.....8vo, 3 50
Waterbury's Cement Laboratory Manual.....12mo, 1 00
Wood's (De V.) Treatise on the Resistance of Materials, and an Appendix on the Preservation of Timber.....8vo, 2 00
Wood's (M. P.) Rustless Coatings: Corrosion and Electrolysis of Iron and Steel.....8vo, 4 00

RAILWAY ENGINEERING.

Andrews's Handbook for Street Railway Engineers.....3×5 inches, mor. 1 25
Berg's Buildings and Structures of American Railroads.....4to, 5 00
Brooks's Handbook of Street Railroad Location.....16mo, mor. 1 50
Butts's Civil Engineer's Field-book.....16mo, mor. 2 50
Crandall's Railway and Other Earthwork Tables.....8vo, 1 50
Transition Curve.....16mo, mor. 1 50
* Crockett's Methods for Earthwork Computations.....8vo, 1 50
Dredge's History of the Pennsylvania Railroad. (1879).....Paper 5 00
Fisher's Table of Cubic Yards.....Cardboard, 25
Godwin's Railroad Engineers' Field-book and Explorers' Guide..16mo, mor. 2 50
Hudson's Tables for Calculating the Cubic Contents of Excavations and Embankments.....8vo, 1 00
Ives and Hilts's Problems in Surveying, Railroad Surveying and Geodesy 16mo, mor. 1 50
Molitor and Beard's Manual for Resident Engineers.....16mo, 1 00
Nagle's Field Manual for Railroad Engineers.....16mo, mor. 3 00
* Orrock's Railroad Structures and Estimates.....8vo, 3 00
Philbrick's Field Manual for Engineers.....16mo, mor. 3 00
Raymond's Railroad Engineering. 3 volumes.
Vol. I. Railroad Field Geometry. (In Preparation.)
Vol. II. Elements of Railroad Engineering.....8vo, 3 50
Vol. III. Railroad Engineer's Field Book. (In Preparation.)

Searles's Field Engineering.....16mo, mor. $3 00
Railroad Spiral.....16mo, mor. 1 50
Taylor's Prismoidal Formulæ and Earthwork.....8vo, 1 50
* Trautwine's Field Practice of Laying Out Circular Curves for Railroads. 12mo, mor. 2 50
* Method of Calculating the Cubic Contents of Excavations and Embankments by the Aid of Diagrams.....8vo, 2 00
Webb's Economics of Railroad Construction.....Large 12mo, 2 50
Railroad Construction.....16mo, mor. 5 00
Wellington's Economic Theory of the Location of Railways.....Large 12mo, 5 00
Wilson's Elements of Railroad-Track and Construction.....12mo, 2 00

DRAWING.

Barr's Kinematics of Machinery.....8vo, 2 50
* Bartlett's Mechanical Drawing.....8vo, 3 00
* " " " Abridged Ed.....8vo, 1 50
Coolidge's Manual of Drawing.....8vo, paper, 1 00
Coolidge and Freeman's Elements of General Drafting for Mechanical Engineers.....Oblong 4to, 2 50
Durley's Kinematics of Machines.....8vo, 4 00
Emch's Introduction to Projective Geometry and its Application.....8vo, 2 50
French and Ives' Stereotomy.....8vo, 2 50
Hill's Text-book on Shades and Shadows, and Perspective.....8vo, 2 00
Jamison's Advanced Mechanical Drawing.....8vo, 2 00
Elements of Mechanical Drawing.....8vo, 2 50
Jones's Machine Design:
Part I. Kinematics of Machinery.....8vo, 1 50
Part II. Form, Strength, and Proportions of Parts.....8vo, 3 00
Kimball and Barr's Machine Design.....8vo, 3 00
MacCord's Elements of Descritpive Geometry.....8vo, 3 00
Kinematics; or, Practical Mechanism.....8vo, 5 00
Mechanical Drawing.....4to, 4 00
Velocity Diagrams.....8vo, 1 50
McLeod's Descriptive Geometry.....Large 12mo, 1 50
* Mahan's Descriptive Geometry and Stone-cutting.....8vo, 1 50
Industrial Drawing. (Thompson.).....8vo, 3 50
Moyer's Descriptive Geometry.....8vo, 2 00
Reed's Topographical Drawing and Sketching.....4to, 5 00
Reid's Course in Mechanical Drawing.....8vo, 2 00
Text-book of Mechanical Drawing and Elementary Machine Design..8vo, 3 00
Robinson's Principles of Mechanism.....8vo, 3 00
Schwamb and Merrill's Elements of Mechanism.....8vo, 3 00
Smith (A. W.) and Marx's Machine Design.....8vo, 3 00
Smith's (R. S.) Manual of Topographical Drawing. (McMillan.).....8vo, 2 50
* Titsworth's Elements of Mechanical Drawing.....Oblong 8vo, 1 25
Warren's Drafting Instruments and Operations.....12mo, 1 25
Elements of Descriptive Geometry, Shadows, and Perspective.....8vo, 3 50
Elements of Machine Construction and Drawing.....8vo, 7 50
Elements of Plane and Solid Free-hand Geometrical Drawing....12mo, 1 00
General Problems of Shades and Shadows.....8vo, 3 00
Manual of Elementary Problems in the Linear Perspective of Forms and Shadow.....12mo, 1 00
Manual of Elementary Projection Drawing.....12mo, 1 50
Plane Problems in Elementary Geometry.....12mo, 1 25
Problems, Theorems, and Examples in Descriptive Geometry.....8vo, 2 50
Weisbach's Kinematics and Power of Transmission. (Hermann and Klein.).....8vo, 5 00
Wilson's (H. M.) Topographic Surveying.....8vo, 3 50
* Wilson's (V. T.) Descriptive Geometry.....8vo, 1 50
Free-hand Lettering.....8vo, 1 00
Free-hand Perspective.....8vo, 2 50
Woolf's Elementary Course in Descriptive Geometry.....Large 8vo, 3 00

ELECTRICITY AND PHYSICS.

* Abegg's Theory of Electrolytic Dissociation. (von Ende.).....12mo, $1 25
Andrews's Hand-book for Street Railway Engineering.....3×5 inches, mor. 1 25
Anthony and Brackett's Text-book of Physics. (Magie.)....Large 12mo, 3 00
Anthony and Ball's Lecture-notes on the Theory of Electrical Measurements.....12mo, 1 00
Benjamin's History of Electricity.....8vo, 3 00
Voltaic Cell.....8vo, 3 00
Betts's Lead Refining and Electrolysis.....8vo, 4 00
Classen's Quantitative Chemical Analysis by Electrolysis. (Boltwood.).8vo, 3 00
* Collins's Manual of Wireless Telegraphy and Telephony.....12mo, 1 50
Crehore and Squier's Polarizing Photo-chronograph.....8vo, 3 00
* Danneel's Electrochemistry. (Merriam.).....12mo, 1 25
Dawson's "Engineering" and Electric Traction Pocket-book....16mo, mor. 5 00
Dolezalek's Theory of the Lead Accumulator (Storage Battery). (von Ende.) 12mo, 2 50
Duhem's Thermodynamics and Chemistry. (Burgess.).....8vo, 4 00
Flather's Dynamometers, and the Measurement of Power.....12mo, 3 00
Getman's Introduction to Physical Science.....12mo, 1 50
Gilbert's De Magnete. (Mottelay).....8vo, 2 50
* Hanchett's Alternating Currents.....12mo, 1 00
Hering's Ready Reference Tables (Conversion Factors).....16mo, mor. 2 50
* Hobart and Ellis's High-speed Dynamo Electric Machinery.....8vo, 6 00
Holman's Precision of Measurements.....8vo, 2 00
Telescopic Mirror-scale Method, Adjustments, and Tests....Large 8vo, 75
* Karapetoff's Experimental Electrical Engineering.....8vo, 6 00
Kinzbrunner's Testing of Continuous-current Machines.....8vo, 2 00
Landauer's Spectrum Analysis. (Tingle.).....8vo, 3 00
Le Chatelier's High-temperature Measurements. (Boudouard—Burgess.)12mo, 3 00
Löb's Electrochemistry of Organic Compounds. (Lorenz.).....8vo, 3 00
* Lyndon's Development and Electrical Distribution of Water Power..8vo, 3 00
* Lyons's Treatise on Electromagnetic Phenomena. Vols, I .and II. 8vo, each, 6 00
* Michie's Elements of Wave Motion Relating to Sound and Light.....8vo, 4 00
Morgan's Outline of the Theory of Solution and its Results.....12mo, 1 00
* Physical Chemistry for Electrical Engineers.....12mo, 1 50
* Norris's Introduction to the Study of Electrical Engineering.....8vo, 2 50
Norris and Dennison's Course of Problems on the Electrical Characteristics of Circuits and Machines. (In Press.)
* Parshall and Hobart's Electric Machine Design.....4to, half mor, 12 50
Reagan's Locomotives: Simple, Compound, and Electric. New Edition. Large 12mo, 3 50
* Rosenberg's Electrical Engineering. (Haldane Gee—Kinzbrunner.)..8vo, 2 00
Ryan, Norris, and Hoxie's Electrical Machinery. Vol. I.....8vo, 2 50
Schapper's Laboratory Guide for Students in Physical Chemistry.....12mo, 1 00
* Tillman's Elementary Lessons in Heat.....8vo, 1 50
Tory and Pitcher's Manual of Laboratory Physics.....Large 12mo, 2 00
Ulke's Modern Electrolytic Copper Refining.....8vo, 3 00

LAW.

* Brennan's Hand-book of Useful Legal Information for Business Men. 16mo, mor. 5 00
* Davis's Elements of Law.....8vo, 2 50
* Treatise on the Military Law of United States.....8vo, 7 00
* Dudley's Military Law and the Procedure of Courts-martial..Large 12mo, 2 50
Manual for Courts-martial.....16mo, mor. 1 50
Wait's Engineering and Architectural Jurisprudence.....8vo, 6 00
Sheep, 6 50
Law of Contracts.....8vo, 3 00
Law of Operations Preliminary to Construction in Engineering and Architecture.....8vo, 5 00
Sheep, 5 50

MATHEMATICS.

Baker's Elliptic Functions.....8vo, $1 50
Briggs's Elements of Plane Analytic Geometry. (Bôcher.).....12mo, 1 00
* Buchanan's Plane and Spherical Trigonometry.....8vo, 1 00
Byerley's Harmonic Functions.....8vo, 1 00
Chandler's Elements of the Infinitesimal Calculus.....12mo, 2 00
* Coffin's Vector Analysis.....12mo, 2 50
Compton's Manual of Logarithmic Computations.....12mo, 1 50
* Dickson's College Algebra.....Large 12mo, 1 50
* Introduction to the Theory of Algebraic Equations.....Large 12mo, 1 25
Emch's Introduction to Projective Geometry and its Application.....8vo, 2 50
Fiske's Functions of a Complex Variable.....8vo, 1 00
Halsted's Elementary Synthetic Geometry.....8vo, 1 50
Elements of Geometry.....8vo, 1 75
* Rational Geometry.....12mo, 1 50
Synthetic Projective Geometry.....8vo, 1 00
Hyde's Grassmann's Space Analysis.....8vo, 1 00
* Johnson's (J. B.) Three-place Logarithmic Tables: Vest-pocket size, paper, 15
* 100 copies, 5 00
* Mounted on heavy cardboard, 8 × 10 inches, 25
* 10 copies, 2 00
Johnson's (W. W.) Abridged Editions of Differential and Integral Calculus. Large 12mo, 1 vol. 2 50
Curve Tracing in Cartesian Co-ordinates.....12mo, 1 00
Differential Equations.....8vo, 1 00
Elementary Treatise on Differential Calculus.....Large 12mo, 1 50
Elementary Treatise on the Integral Calculus.....Large 12mo, 1 50
* Theoretical Mechanics.....12mo, 3 00
Theory of Errors and the Method of Least Squares.....12mo, 1 50
Treatise on Differential Calculus.....Large 12mo, 3 00
Treatise on the Integral Calculus.....Large 12mo, 3 00
Treatise on Ordinary and Partial Differential Equations...Large 12mo, 3 50
Karapetoff's Engineering Applications of Higher Mathematics. (In Preparation.)
Laplace's Philosophical Essay on Probabilities. (Truscott and Emory.).12mo, 2 00
* Ludlow and Bass's Elements of Trigonometry and Logarithmic and Other Tables.....8vo, 3 00
* Trigonometry and Tables published separately.....Each, 2 00
* Ludlow's Logarithmic and Trigonometric Tables.....8vo, 1 00
Macfarlane's Vector Analysis and Quaternions.....8vo, 1 00
McMahon's Hyperbolic Functions.....8vo, 1 00
Manning's Irrational Numbers and their Representation by Sequences and Series.....12mo, 1 25
Mathematical Monographs. Edited by Mansfield Merriman and Robert S. Woodward.....Octavo, each 1 00

No. 1. History of Modern Mathematics, by David Eugene Smith.
No. 2. Synthetic Projective Geometry, by George Bruce Halsted.
No. 3. Determinants, by Laenas Gifford Weld. No. 4. Hyperbolic Functions, by James McMahon. No. 5. Harmonic Functions, by William E. Byerly. No. 6. Grassmann's Space Analysis, by Edward W. Hyde. No. 7. Probability and Theory of Errors, by Robert S. Woodward. No. 8. Vector Analysis and Quaternions, by Alexander Macfarlane. No. 9. Differential Equations, by William Woolsey Johnson. No. 10. The Solution of Equations, by Mansfield Merriman. No. 11. Functions of a Complex Variable, by Thomas S. Fiske.

Maurer's Technical Mechanics.....8vo, 4 00
Merriman's Method of Least Squares.....8vo, 2 00
Solution of Equations.....8vo, 1 00
Rice and Johnson's Differential and Integral Calculus. 2 vols. in one. Large 12mo, 1 50
Elementary Treatise on the Differential Calculus.....Large 12mo, 3 00
Smith's History of Modern Mathematics.....8vo, 1 00
* Veblen and Lennes's Introduction to the Real Infinitesimal Analysis of One Variable.....8vo, 2 00

* Waterbury's Vest Pocket Hand-book of Mathematics for Engineers. $2\frac{1}{2} \times 5\frac{3}{4}$ inches, mor. $1 00
* Enlarged Edition, Including Tables ..... mor. 1 50
Weld's Determinants 8vo, 1 00
Wood's Elements of Co-ordinate Geometry 8vo, 2 00
Woodward's Probability and Theory of Errors 8vo, 1 00

MECHANICAL ENGINEERING.

MATERIALS OF ENGINEERING, STEAM-ENGINES AND BOILERS.

Bacon's Forge Practice 12mo, 1 50
Baldwin's Steam Heating for Buildings 12mo, 2 50
Barr's Kinematics of Machinery 8vo, 2 50
* Bartlett's Mechanical Drawing 8vo, 3 00
* " " " Abridged Ed. 8vo, 1 50
* Burr's Ancient and Modern Engineering and the Isthmian Canal 8vo, 3 50
Carpenter's Experimental Engineering 8vo, 6 00
Heating and Ventilating Buildings 8vo, 4 00
Clerk's Gas and Oil Engine. (New edition in press.)
Compton's First Lessons in Metal Working 12mo, 1 50
Compton and De Groodt's Speed Lathe 12mo, 1 50
Coolidge's Manual of Drawing ..... 8vo, paper, 1 00
Coolidge and Freeman's Elements of Geenral Drafting for Mechanical Engineers ..... Oblong 4to, 2 50
Cromwell's Treatise on Belts and Pulleys 12mo, 1 50
Treatise on Toothed Gearing 12mo, 1 50
Dingey's Machinery Pattern Making 12mo, 2 00
Durley's Kinematics of Machines 8vo, 4 00
Flanders's Gear-cutting Machinery ..... Large 12mo, 3 00
Flather's Dynamometers and the Measurement of Power 12mo, 3 00
Rope Driving 12mo, 2 00
Gill's Gas and Fuel Analysis for Engineers 12mo, 1 25
Goss's Locomotive Sparks 8vo, 2 00
Greene's Pumping Machinery. (In Preparation.)
Hering's Ready Reference Tables (Conversion Factors) ..... 16mo, mor. 2 50
* Hobart and Ellis's High Speed Dynamo Electric Machinery 8vo, 6 00
Hutton's Gas Engine 8vo, 5 00
Jamison's Advanced Mechanical Drawing 8vo, 2 00
Elements of Mechanical Drawing 8vo, 2 50
Jones's Gas Engine 8vo, 4 00
Machine Design:
Part I. Kinematics of Machinery 8vo, 1 50
Part II. Form, Strength, and Proportions of Parts 8vo, 3 00
Kent's Mechanical Engineer's Pocket-Book ..... 16mo, mor. 5 00
Kerr's Power and Power Transmission 8vo, 2 00
Kimball and Barr's Machine Design 8vo, 3 00
* Levin's Gas Engine 8vo, 4 00
Leonard's Machine Shop Tools and Methods 8vo, 4 00
* Lorenz's Modern Refrigerating Machinery. (Pope, Haven, and Dean) 8vo, 4 00
MacCord's Kinematics; or, Practical Mechanism 8vo, 5 00
Mechanical Drawing 4to, 4 00
Velocity Diagrams 8vo, 1 50
MacFarland's Standard Reduction Factors for Gases 8vo, 1 50
Mahan's Industrial Drawing. (Thompson.) 8vo, 3 50
Mehrtens's Gas Engine Theory and Design ..... Large 12mo, 2 50
Oberg's Handbook of Small Tools ..... Large 12mo, 3 00
* Parshall and Hobart's Electric Machine Design. Small 4to, half leather, 12 50
Peele's Compressed Air Plant for Mines 8vo, 3 00
Poole's Calorific Power of Fuels 8vo, 3 00
* Porter's Engineering Reminiscences, 1855 to 1882 ..... 8vo, 3 00
Reid's Course in Mechanical Drawing 8vo, 2 00
Text-book of Mechanical Drawing and Elementary Machine Design 8vo, 3 00

Richards's Compressed Air.....12mo, $1 50
Robinson's Principles of Mechanism.....8vo, 3 00
Schwamb and Merrill's Elements of Mechanism.....8vo, 3 00
Smith (A. W.) and Marx's Machine Design.....8vo, 3 00
Smith's (O.) Press-working of Metals.....8vo, 3 00
Sorel's Carbureting and Combustion in Alcohol Engines. (Woodward and Preston.).....Large 12mo, 3 00
Stone's Practical Testing of Gas and Gas Meters.....8vo, 3 50
Thurston's Animal as a Machine and Prime Motor, and the Laws of Energetics. 12mo, 1 00
Treatise on Friction and Lost Work in Machinery and Mill Work...8vo, 3 00
* Tillson's Complete Automobile Instructor.....16mo, 1 50
* Titsworth's Elements of Mechanical Drawing.....Oblong 8vo, 1 25
Warren's Elements of Machine Construction and Drawing.....8vo, 7 50
* Waterbury's Vest Pocket Hand-book of Mathematics for Engineers. $2\frac{7}{8}\times5\frac{3}{4}$ inches, mor. 1 00
* Enlarged Edition, Including Tables.....mor. 1 50
Weisbach's Kinematics and the Power of Transmission. (Herrmann—Klein.).....8vo, 5 00
Machinery of Transmission and Governors. (Hermann—Klein.)..8vo, 5 00
Wood's Turbines.....8vo, 2 50

MATERIALS OF ENGINEERING.

* Bovey's Strength of Materials and Theory of Structures.....8vo, 7 50
Burr's Elasticity and Resistance of the Materials of Engineering.....8vo, 7 50
Church's Mechanics of Engineering.....8vo, 6 00
* Greene's Structural Mechanics.....8vo, 2 50
* Holley's Lead and Zinc Pigments.....Large 12mo 3 00
Holley and Ladd's Analysis of Mixed Paints, Color Pigments, and Varnishes. Large 12mo, 2 50
Johnson's (C. M.) Rapid Methods for the Chemical Analysis of Special Steels, Steel-Making Alloys and Graphite.....Large 12mo, 3 00
Johnson's (J. B.) Materials of Construction.....8vo, 6 00
Keep's Cast Iron.....8vo, 2 50
Lanza's Applied Mechanics.....8vo, 7 50
Maire's Modern Pigments and their Vehicles.....12mo, 2 00
Maurer's Techincal Mechanics.....8vo, 4 00
Merriman's Mechanics of Materials.....8vo, 5 00
* Strength of Materials.....12mo, 1 00
Metcalf's Steel. A Manual for Steel-users.....12mo, 2 00
Sabin's Industrial and Artistic Technology of Paint and Varnish.....8vo, 3 00
Smith's ((A. W.) Materials of Machines.....12mo, 1 00
* Smith's (H. E.) Strength of Material.....12mo, 1 25
Thurston's Materials of Engineering.....3 vols., 8vo, 8 00
Part I. Non-metallic Materials of Engineering.....8vo, 2 00
Part II. Iron and Steel.....8vo, 3 50
Part III. A Treatise on Brasses, Bronzes, and Other Alloys and their Constituents.....8vo, 2 50
Wood's (De V.) Elements of Analytical Mechanics.....8vo, 3 00
Treatise on the Resistance of Materials and an Appendix on the Preservation of Timber.....8vo, 2 00
Wood's (M. P.) Rustless Coatings: Corrosion and Electrolysis of Iron and Steel.....8vo, 4 00

STEAM-ENGINES AND BOILERS.

Berry's Temperature-entropy Diagram.....12mo, 2 00
Carnot's Reflections on the Motive Power of Heat. (Thurston.).....12mo, 1 50
Chase's Art of Pattern Making.....12mo, 2 50

Creighton's Steam-engine and other Heat Motors....8vo, $5 00
Dawson's "Engineering" and Electric Traction Pocket-book....16mo, mor. 5 00
Ford's Boiler Making for Boiler Makers....18mo, 1 00
* Gebhardt's Steam Power Plant Engineering....8vo, 6 00
Goss's Locomotive Performance....8vo, 5 00
Hemenway's Indicator Practice and Steam-engine Economy....12mo, 2 00
Hutton's Heat and Heat-engines....8vo, 5 00
Mechanical Engineering of Power Plants....8vo, 5 00
Kent's Steam boiler Economy....8vo, 4 00
Kneass's Practice and Theory of the Injector....8vo, 1 50
MacCord's Slide-valves....8vo, 2 00
Meyer's Modern Locomotive Construction....4to, 10 00
Moyer's Steam Turbine....8vo, 4 00
Peabody's Manual of the Steam-engine Indicator....12mo, 1 50
Tables of the Properties of Steam and Other Vapors and Temperature-Entropy Table....8vo, 1 00
Thermodynamics of the Steam-engine and Other Heat-engines....8vo, 5 00
Valve-gears for Steam-engines....8vo, 2 50
Peabody and Miller's Steam-boilers....8vo, 4 00
Pupin's Thermodynamics of Reversible Cycles in Gases and Saturated Vapors. (Osterberg.)....12mo, 1 25
Reagan's Locomotives: Simple, Compound, and Electric. New Edition. Large 12mo, 3 50
Sinclair's Locomotive Engine Running and Management....12mo, 2 00
Smart's Handbook of Engineering Laboratory Practice....12mo, 2 50
Snow's Steam-boiler Practice....8vo, 3 00
Spangler's Notes on Thermodynamics....12mo, 1 00
Valve-gears....8vo, 2 50
Spangler, Greene, and Marshall's Elements of Steam-engineering....8vo, 3 00
Thomas's Steam-turbines....8vo, 4 00
Thurston's Handbook of Engine and Boiler Trials, and the Use of the Indicator and the Prony Brake....8vo, 5 00
Handy Tables....8vo, 1 50
Manual of Steam-boilers, their Designs, Construction, and Operation 8vo, 5 00
Manual of the Steam-engine....2vols., 8vo, 10 00
Part I. History, Structure, and Theory....8vo, 6 00
Part II. Design, Construction, and Operation....8vo, 6 00
Wehrenfenning's Analysis and Softening of Boiler Feed-water. (Patterson.) 8vo, 4 00
Weisbach's Heat, Steam, and Steam-engines. (Du Bois.)....8vo, 5 00
Whitham's Steam-engine Design....8vo, 5 00
Wood's Thermodynamics, Heat Motors, and Refrigerating Machines....8vo, 4 00

MECHANICS PURE AND APPLIED.

Church's Mechanics of Engineering....8vo, 6 00
Notes and Examples in Mechanics....8vo, 2 00
Dana's Text-book of Elementary Mechanics for Colleges and Schools .12mo, 1 50
Du Bois's Elementary Principles of Mechanics:
Vol. I. Kinematics....8vo, 3 50
Vol. II. Statics....8vo, 4 00
Mechanics of Engineering. Vol. I....Small 4to, 7 50
Vol. II....Small 4to, 10 00
* Greene's Structural Mechanics....8vo, 2 50
James's Kinematics of a Point and the Rational Mechanics of a Particle. Large 12mo, 2 00
* Johnson's (W. W.) Theoretical Mechanics....12mo, 3 00
Lanza's Applied Mechanics....8vo, 7 50
* Martin's Text Book on Mechanics, Vol. I, Statics....12mo, 1 25
* Vol. II, Kinematics and Kinetics.12mo, 1 50
Maurer's Technical Mechanics....8vo, 4 00
* Merriman's Elements of Mechanics....12mo, 1 00
Mechanics of Materials....8vo, 5 00

* Michie's Elements of Analytical Mechanics.....8vo, $4 00
Robinson's Principles of Mechanism.....8vo, 3 00
Sanborn's Mechanics Problems.....Large 12mo, 1 50
Schwamb and Merrill's Elements of Mechanism.....8vo, 3 00
Wood's Elements of Analytical Mechanics.....8vo, 3 00
Principles of Elementary Mechanics.....12mo, 1 25

MEDICAL.

* Abderhalden's Physiological Chemistry in Thirty Lectures. (Hall and Defren.).....8vo, 5 00
von Behring's Suppression of Tuberculosis. (Bolduan.).....12mo, 1 00
Bolduan's Immune Sera.....12mo, 1 50
Bordet's Studies in Immunity. (Gay.).....8vo, 6 00
Davenport's Statistical Methods with Special Reference to Biological Variations.....16mo, mor. 1 50
Ehrlich's Collected Studies on Immunity. (Bolduan.).....8vo, 6 00
* Fischer's Physiology of Alimentation.....Large 12mo, 2 00
de Fursac's Manual of Psychiatry. (Rosanoff and Collins.)....Large 12mo, 2 50
Hammarsten's Text-book on Physiological Chemistry. (Mandel.).....8vo, 4 00
Jackson's Directions for Laboratory Work in Physiological Chemistry..8vo, 1 25
Lassar-Cohn's Practical Urinary Analysis. (Lorenz.).....12mo, 1 00
Mandel's Hand-book for the Bio-Chemical Laboratory.....12mo, 1 50
* Pauli's Physical Chemistry in the Service of Medicine. (Fischer.)..12mo, 1 25
* Pozzi-Escot's Toxins and Venoms and their Antibodies. (Cohn.)..12mo, 1 00
Rostoski's Serum Diagnosis. (Bolduan.).....12mo, 1 00
Ruddiman's Incompatibilities in Prescriptions.....8vo, 2 00
Whys in Pharmacy.....12mo, 1 00
Salkowski's Physiological and Pathological Chemistry. (Orndorff.)....8vo, 2 50
* Satterlee's Outlines of Human Embryology.....12mo, 1 25
Smith's Lecture Notes on Chemistry for Dental Students.....8vo, 2 50
* Whipple's Tyhpoid Fever.....Large 12mo, 3 00
* Woodhull's Military Hygiene for Officers of the Line.....Large 12mo, 1 50
* Personal Hygiene.....12mo, 1 00
Worcester and Atkinson's Small Hospitals Establishment and Maintenance, and Suggestions for Hospital Architecture, with Plans for a Small Hospital.....12mo, 1 25

METALLURGY.

Betts's Lead Refining by Electrolysis.....8vo, 4 00
Bolland's Encyclopedia of Founding and Dictionary of Foundry Terms used in the Practice of Moulding.....12mo, 3 00
Iron Founder.....12mo, 2 50
" " Supplement.....12mo, 2 50
Douglas's Untechnical Addresses on Technical Subjects.....12mo, 1 00
Goesel's Minerals and Metals: A Reference Book.....16mo. mor. 3 00
* Iles's Lead-smelting.....12mo, 2 50
Johnson's Rapid Methods for the Chemical Analysis of Special Steels, Steel-making Alloys and Graphite.....Large 12mo, 3 00
Keep's Cast Iron.....8vo, 2 50
Le Chatelier's High-temperature Measurements. (Boudouard—Burgess.) 12mo, 3 00
Metcalf's Steel. A Manual for Steel-users.....12mo, 2 00
Minet's Production of Aluminum and its Industrial Use. (Waldo.)..12mo, 2 50
* Ruer's Elements of Metallography. (Mathewson.).....8vo, 3 00
Smith's Materials of Machines.....12mo, 1 00
Tate and Stone's Foundry Practice.....12mo, 2 00
Thurston's Materials of Engineering. In Three Parts.....8vo, 8 00
Part I. Non-metallic Materials of Engineering, see Civil Engineering, page 9.
Part II. Iron and Steel.....8vo, 3 50
Part III. A Treatise on Brasses, Bronzes, and Other Alloys and their Constituents.....8vo, 2 50

Ulke's Modern Electrolytic Copper Refining.....8vo, $3 00
West's American Foundry Practice.....12mo, 2 50
Moulders' Text Book.....12mo, 2 50

MINERALOGY.

Baskerville's Chemical Elements. (In Preparation.)
* Browning's Introduction to the Rarer Elements.....8vo, 1 50
Brush's Manual of Determinative Mineralogy. (Penfield.).....8vo, 4 00
Butler's Pocket Hand-book of Minerals.....16mo, mor. 3 00
Chester's Catalogue of Minerals.....8vo, paper, 1 00
Cloth, 1 25
* Crane's Gold and Silver.....8vo, 5 00
Dana's First Appendix to Dana's New "System of Mineralogy"..Large 8vo, 1 00
Dana's Second Appendix to Dana's New "System of Mineralogy."
Large 8vo,
Manual of Mineralogy and Petrography.....12mo, 2 00
Minerals and How to Study Them.....12mo, 1 50
System of Mineralogy.....Large 8vo, half leather, 12 50
Text-book of Mineralogy.....8vo, 4 00
Douglas's Untechnical Addresses on Technical Subjects.....12mo, 1 00
Eakle's Mineral Tables.....8vo, 1 25
Eckel's Stone and Clay Products Used in Engineering. (In Preparation.)
Goesel's Minerals and Metals: A Reference Book.....16mo, mor. 3 00
Groth's Introduction to Chemical Crystallography (Marshall).....12mo, 1 25
* Hayes's Handbook for Field Geologists.....16mo, mor. 1 50
Iddings's Igneous Rocks.....8vo, 5 00
Rock Minerals.....8vo, 5 00
Johannsen's Determination of Rock-forming Minerals in Thin Sections. 8vo,
With Thumb Index 5 00
* Martin's Laboratory Guide to Qualitative Analysis with the Blow-pipe.....12mo, 1 50
60
Merrill's Non-metallic Minerals: Their Occurrence and Uses.....8vo, 4 00
Stones for Building and Decoration.....8vo, 5 00
* Penfield's Notes on Determinative Mineralogy and Record of Mineral Tests. 8vo, paper, 50
Tables of Minerals, Including the Use of Minerals and Statistics of Domestic Production.....8vo, 1 00
* Pirsson's Rocks and Rock Minerals.....12mo, 2 50
* Richards's Synopsis of Mineral Characters.....12mo, mor. 1 25
* Ries's Clays: Their Occurrence, Properties and Uses.....8vo, 5 00
* Ries and Leighton's History of the Clay-working Industry of the United States.....8vo, 2 50
* Tillman's Text-book of Important Minerals and Rocks.....8vo, 2 00
Washington's Manual of the Chemical Analysis of Rocks.....8vo, 2 00

MINING.

* Beard's Mine Gases and Explosions.....Large 12mo, 3 00
* Crane's Gold and Silver.....8vo, 5 00
* Index of Mining Engineering Literature.....8vo, 4 00
* 8vo, mor. 5 00
Mining Methods. (In Press.)
Douglas's Untechnical Addresses on Technical Subjects.....12mo, 1 00
Eissler's Modern High Explosives.....8vo, 4 00
Goesel's Minerals and Metals: A Reference Book.....16mo, mor. 3 00
Ihlseng's Manual of Mining.....8vo, 5 00
* Iles's Lead Smelting.....12mo, 2 50
Peele's Compressed Air Plant for Mines.....8vo, 3 00
Riemer's Shaft Sinking Under Difficult Conditions. (Corning and Peele.)8vo, 3 00
* Weaver's Military Explosives.....8vo, 3 00
Wilson's Hydraulic and Placer Mining. 2d edition, rewritten.....12mo, 2 50
Treatise on Practical and Theoretical Mine Ventilation.....12mo, 1 25

SANITARY SCIENCE.

Association of State and National Food and Dairy Departments, Hartford Meeting, 1906. ..... 8vo, $3 00
Jamestown Meeting, 1907. ..... 8vo, 3 00
* Bashore's Outlines of Practical Sanitation. 12mo, 1 25
Sanitation of a Country House. 12mo, 1 00
Sanitation of Recreation Camps and Parks. 12mo, 1 00
Folwell's Sewerage. (Designing, Construction, and Maintenance.) 8vo, 3 00
Water-supply Engineering. 8vo, 4 00
Fowler's Sewage Works Analyses. 12mo, 2 00
Fuertes's Water-filtration Works. 12mo, 2 50
Water and Public Health. 12mo, 1 50
Gerhard's Guide to Sanitary Inspections. 12mo, 1 50
* Modern Baths and Bath Houses. 8vo, 3 00
Sanitation of Public Buildings. 12mo, 1 50
* The Water Supply, Sewerage, and Plumbing of Modern City Buildings. 8vo, 4 00
Hazen's Clean Water and How to Get It. ..... Large 12mo, 1 50
Filtration of Public Water-supplies. 8vo, 3 00
Kinnicut, Winslow and Pratt's Purification of Sewage. (In Preparation.)
Leach's Inspection and Analysis of Food with Special Reference to State Control. 8vo, 7 50
Mason's Examination of Water. (Chemical and Bacteriological) 12mo, 1 25
Water-supply. (Considered principally from a Sanitary Standpoint). 8vo, 4 00
* Merriman's Elements of Sanitary Engineering. 8vo, 2 00
Ogden's Sewer Construction 8vo, 3 00
Sewer Design. 12mo, 2 00
Parsons's Disposal of Municipal Refuse. 8vo, 2 00
Prescott and Winslow's Elements of Water Bacteriology, with Special Reference to Sanitary Water Analysis. 12mo, 1 50
* Price's Handbook on Sanitation. 12mo, 1 50
Richards's Cost of Cleanness. 12mo, 1 00
Cost of Food. A Study in Dietaries. 12mo, 1 00
Cost of Living as Modified by Sanitary Science. 12mo, 1 00
Cost of Shelter. 12mo, 1 00
* Richards and Williams's Dietary Computer. 8vo, 1 50
Richards and Woodman's Air, Water, and Food from a Sanitary Standpoint. 8vo, 2 00
* Richey's Plumbers', Steam-fitters', and Tinners' Edition (Building Mechanics Ready Reference Series). ..... 16mo, mor. 1 50
Rideal's Disinfection and the Preservation of Food. 8vo, 4 00
Sewage and Bacterial Purification of Sewage. 8vo, 4 00
Soper's Air and Ventilation of Subways. 12mo, 2 50
Turneaure and Russell's Public Water-supplies. 8vo, 5 00
Venable's Garbage Crematories in America. 8vo, 2 00
Method and Devices for Bacterial Treatment of Sewage. 8vo, 3 00
Ward and Whipple's Freshwater Biology. (In Press.)
Whipple's Microscopy of Drinking-water. 8vo, 3 50
* Typhoid Fever. ..... Large 12mo, 3 00
Value of Pure Water. ..... Large 12mo, 1 00
Winslow's Systematic Relationship of the Coccaceæ. ..... Large 12mo, 2 50

MISCELLANEOUS.

Emmons's Geological Guide-book of the Rocky Mountain Excursion of the International Congress of Geologists. ..... Large 8vo. 1 50
Ferrel's Popular Treatise on the Winds. 8vo, 4 00
Fitzgerald's Boston Machinist. 18mo, 1 00
Gannett's Statistical Abstract of the World. 24mo, 75
Haines's American Railway Management. 12mo, 2 50
Hanausek's The Microscopy of Technical Products. (Winton) 8vo, 5 00

Jacobs's Betterment Briefs. A Collection of Published Papers on Organized Industrial Efficiency. 8vo, $3 50
Metcalfe's Cost of Manufactures, and the Administration of Workshops. . 8vo, 5 00
Putnam's Nautical Charts. 8vo, 2 00
Ricketts's History of Rensselaer Polytechnic Institute 1824–1894. Large 12mo, 3 00
Rotherham's Emphasised New Testament. . . . . Large 8vo, 2 00
Rust's Ex-Meridian Altitude, Azimuth and Star-finding Tables. 8vo, 5 00
Standage's Decoration of Wood, Glass, Metal, etc. 12mo, 2 00
Thome's Structural and Physiological Botany. (Bennett). 16mo, 2 25
Westermaier's Compendium of General Botany. (Schneider). 8vo, 2 00
Winslow's Elements of Applied Microscopy. 12mo, 1 50

HEBREW AND CHALDEE TEXT-BOOOKS.

Gesenius's Hebrew and Chaldee Lexicon to the Old Testament Scriptures. (Tregelles.) . . . . . Small 4to, half mor, 5 00
Green's Elementary Hebrew Grammar. 12mo, 1 25

14 DAY USE
RETURN TO DESK FROM WHICH BORROWED

LOAN DEPT.

This book is due on the last date stamped below, or on the date to which renewed.
Renewed books are subject to immediate recall.

ICLF (N)

REC'D LD
APR 7 1950

29Mar'52LW

REC'D LD
MAR 26 1962

JUL 26 1967 50

JUL 27 '67 -12 M
LOAN DEPT.

FEB 17 1970

RECEIVED
FEB 16 '70 -10 AM
LOAN DEPT.

FEB 21 1988

AUTO DISC JAN 25 1988

LD 21A–50*m*-4,'59
(A1724s10)476B

General Library
University of California
Berkeley

YC 12751

U.C. BERKELEY LIBRARIES

C006148836

195030

Creighton